BC Hydro
Power smart

[redacted] Seton Generating Station Generator and Turbine Replacement Project

Interconnection System Impact Study

[redacted]

Prepared for: [redacted]

Prepared by: [redacted]

[redacted]
Sr. Engineer, Interconnection Planning

Checked by: [redacted]

[redacted]
Sr. Engineer, Interconnection Planning

Reviewed by: [redacted]

[redacted]
Manager, Interconnection Planning

Accepted by: [redacted]

[redacted]
Manager, Transmission Asset Planning

2023 Feb 21

T&S Planning 2022-036

Contributors

The following Professionals of Record (POR) accept responsibility for their technical content in the specified respective sections. Professionals apply their signature and/or seal for the technical or non-technical content as appropriate.

Section:	**Discipline:**
Entire report except sections listed below	Transmission Planning
Contributed by:	[redacted] [redacted] Sr. Engineer, Interconnection Planning

Section:	**Discipline:**
5.3 & 5.5	[redacted]
[redacted]	[redacted] [redacted] Sr. Engineer, Station Planning
Reviewed by:	[redacted] Team Lead, Station Planning

Section:	**Discipline:**
5.3 & 5.6.1 & 5.6.2	P&C Planning
Contributed by:	[redacted] [redacted] Sr. Engineer, P&C Planning
Reviewed by:	[redacted] Specialist Engineer, P&C Planning

Section:	**Discipline:**
5.4	Transmission Operations Services

Contributed by: [redacted]

[redacted]
Sr. Engineer, Transmission Operations Services

Reviewed by: [redacted]
Principal Engineer, Transmission Operations Services

Section:	**Discipline:**
5.6.3	Telecom Planning

Contributed by: [redacted]

[redacted]
Specialist Engineer, Telecom Planning

Reviewed by: [redacted]
Specialist Engineer, Telecom Planning

The following accept responsibility for the content in Section 6 Cost Estimate and Schedule, but the cost/schedule information is not covered by any of the P.Eng. seals/stamps.

Section:	**Discipline:**
6	Cost Estimate and Schedule

Contributed by: [redacted]

[redacted]
Manager, Customer Interconnections

Report Metadata

Header:	[redacted] Seton Generating Station Generator and Turbine Replacement Project
Subheader:	Interconnection System Impact Study
Title:	[redacted]
Subtitle:	[redacted]
Report Number:	T&S Planning 2022-036
Revision:	0
Confidentiality:	Public
Date:	2023 Feb 21
Volume:	1 of 1
Prepared for:	[redacted]
Prepared by:	[redacted]
Title:	Sr. Engineer, Interconnection Planning
Checked by:	[redacted]
Title:	Sr. Engineer, Interconnection Planning
Reviewed by:	[redacted]
Title:	Manager, Interconnection Planning
Related Facilities:	
Additional Metadata:	

Revisions

Revision	Date	Description
0	2023 Feb	Initial release

Disclaimer of Warranty, Limitation of Liability

This report was prepared solely for internal purposes. All parties other than BC Hydro are third parties.

BC Hydro does not represent, guarantee or warrant to any third party, either expressly or by implication:

any information, product or process disclosed, described or recommended in this report.

BC Hydro does not accept any liability of any kind arising in any way out of the use by a third party of any information, product or process disclosed, described or recommended in this report, nor does BC Hydro accept any liability arising out of reliance by a third party upon any information, statements or recommendations contained in this report. Should third parties use or rely on any information, product or process disclosed, described or recommended in this report, they do so entirely at their own risk.

This report was prepared by the British Columbia Hydro And Power Authority ("BCH") or, as the case may be, on behalf of BCH by persons or entities including, without limitation, persons or entities who are or were employees, agents, consultants, contractors, subcontractors, professional advisers or representatives of, or to, BCH (individually and collectively, "BCH Personnel").

This report is to be read in the context of the methodology, procedures and techniques used, BCH's or BCH's Personnel's assumptions, and the circumstances and constraints under which BCH's mandate to prepare this report was performed. This report is written solely for the purpose expressly stated in this report, and for the sole and exclusive benefit of the person or entity who directly engaged BCH to prepare this report. Accordingly, this report is suitable only for such purpose, and is subject to any changes arising after the date of this report. This report is meant to be read as a whole, and accordingly no section or part of it should be read or relied upon out of context.

Unless otherwise expressly agreed by BCH:

(a) any assumption, data or information (whether embodied in tang ble or electronic form) supplied by, or gathered from, any source (including, without limitation, any consultant, contractor or subcontractor, testing laboratory and equipment suppliers, etc.) upon which BCH's opinion or conclusion as set out in this report is based (individually and collectively, "Information") has not been verified by BCH or BCH's Personnel; BCH makes no representation as to its accuracy or completeness and disclaims all liability with respect to the Information;

(b) except as expressly set out in this report, all terms, conditions, warranties, representations and statements (whether express, implied, written, oral, collateral, statutory or otherwise) are excluded to the maximum extent permitted by law and, to the extent they cannot be excluded, BCH disclaims all liability in relation to them to the maximum extent permitted by law;

(c) BCH does not represent or warrant the accuracy, completeness, merchantability, fitness for purpose or usefulness of this report, or any information contained in this report, for use or consideration by any person or entity. In addition, BCH does not accept any liability arising out of reliance by a person or entity on this report, or any information contained in this report, or for any errors or omissions in this report. Any use, reliance or publication by any person or entity of this report or any part of it is at their own risk; and

(d) In no event will BCH or BCH's Personnel be liable to any recipient of this report for any damage, loss, cost, expense, injury or other liability that arises out of or in connection with this report including, without limitation, any indirect, special, incidental, punitive or consequential loss, liability or damage of any kind.

Copyright Notice

Table of Contents

Tables

Figures

Appendices

Acronyms

The following are acronyms used in this report.

BR1	Bridge River #1 Generating Station
BR2	Bridge River #2 Generating Station
BRR	Bridge River Region
BRT	Bridge River Terminal Substation
BRTP	Bridge River Transmission Project
CRQ	Carquille Substation
CKY	Cheekye Substation
COD	Commercial Operation Date
ERIS	Energy Resource Interconnection Service
FVO	Fraser Valley Office
GTR	Generator and Turbine Replacement
HMH	Hundred Mile House Substation
IC	Interconnection Customer
JME	Jamie Creek Generating Station
KLY	Kelly Lake Substation
LAJ	Lajoie Generating Station
NERC	North American Electrical Reliability Corporation
NRIS	Network Resource Interconnection Service
OATT	Open Access Transmission Tariff
OO	Operating Order
OOS	Out of Service
POI	Point of Interconnection
PSS	Power System Stabilizer
RAS	Remedial Action Scheme
ROS	Rosedale Substation
SIO	South Interior Office
SIS	System Impact Study
SON	Seton Generating Station
TIR	BC Hydro 60 kV to 500 kV Technical Interconnection Requirements for Power Generators

TOP BC Hydro Transmission Operator

UHT Upper Harrison Terminal Substation

WAH Wahleach Generating Station

WDN Walden North Generating Station

WECC Western Electricity Coordinating Council

Executive Summary

[redacted], the Interconnection Customer (IC), requests a system impact study (SIS) for the Seton Generating Station (SON) Generator and Turbine Replacement (GTR) project. This project is to replace the existing generating unit (42 MVA) with a 50 MVA unit and will result in a 3 MW increase of the plant's maximum power injection, from 42 MW to 45 MW. The Point of Interconnection (POI) for the SON remains at the 60 kV disconnect 60DCB1 that connects the unit G1 and the transformer T1 to the SON 60 kV bus. The Commercial Operation Date (COD) for the new generating unit, is November 30, 2028.

In the area system that the SON unit is connected, there is a pre-existing overloading concern on the existing 230 kV line 2L90 between the Kelly Lake Substation (KLY) and the Bridge River Terminal (BRT). It has been assumed that for the purpose of performing this SIS, the 230 kV transmission line, 2L90, will be uprated for the conductor to operate continuously at up to 90˚C by October 2025.

The SIS has identified the following conclusions and requirements:

- With the assumed uprated 2L90 rating, certain contingencies in the area can cause various transmission elements overloading and local system instability issues if no generation shedding is triggered. With adequate generation shedding specified in Operating Order (OO) 7T-14 and OO 7T-25, the system performance with the SON GTR project is acceptable under system normal and contingency conditions. The shedding requirements for the existing SON unit will be applicable to the SON new unit. No system upgrade is identified in this SIS.
- The existing SON unit is capable of black start, and the new generating unit will retain its black start capability. However, the black start capability will be unavailable during the project construction period. The IC is required to obtain an official acceptance from the BC Hydro Transmission Operator (TOP) for this black start unit unavailable during the project construction period before the construction starts.

It can be expected that some Protection & Control supporting work and field coordination will be needed before and during the project commissioning, and the associated cost will be a part of the overall SON GRP project budget.

1 Introduction

[redacted], the Interconnection Customer (IC), requested a system impact study (SIS) for the Seton Generating Station (SON) Generator and Turbine Replacement (GTR) project. This project is to replace the existing generating unit (42 MVA) with a 50 MVA unit and will result in a 3 MW increase of the plant's maximum power injection, from 42 MW to 45 MW. The Point of Interconnection (POI) for the SON remains at the 60 kV disconnect 60DCB1 that connects the unit G1 and the transformer T1 to the SON 60 kV bus. The Commercial Operation Date (COD) for the new generating unit, is November 30, 2028.

The project reviewed in this SIS is summarized in Table 1-1 below.

Table 1-1: Project Information

Project Name	Seton Generating Station (SON) Generator and Turbine Replacement	
Interconnection Customer	[redacted]	
Point of Interconnection	The SON step up transformer T1 high voltage side 60 kV disconnect 60DCB1	
IC Proposed COD	November 30, 2028	
Type of Interconnection Service	NRIS ☒	ERIS ☐

SON is owned by [redacted] and located on Fraser River, 2 km south of Lillooet, British Columbia. The SON is connected to Bridge River #1 Generating Station (BR1) through 60L21 and is also connected to Carquille Substation (CRQ) through 60L20. CRQ is connected to Hundred Mile House Substation (HMH) through 60L301. There is another generating station, Walden North (WDN) tap connected on 60L21. The 60 kV system connecting BR1-SON-CRQ-HMH has a limited transfer capacity. There is also a 60 kV transmission line 60L22 radially connected to BR1 and have two generating stations, Lajoie (LAJ) and Jamie Creek (JME), connected on it.

Bridge River and the adjacent areas are generation resource rich areas. The Bridge River bulk 230/345 kV transmission system currently has constrained to transfer the generation to load center in the Lower Mainland with high generation outputs from Bridge River Region (BRR) and adjacent areas, including Cheekye Substation (CKY), Upper Harrison Terminal (UHT) and Wahleach areas.

In the area system that the SON unit is connected, there is a pre-existing overloading concern on the existing 230 kV line 2L90 between the Kelly Lake Substation (KLY) and the Bridge River Terminal (BRT). It has been assumed that for the purpose of performing this SIS, the 230 kV transmission line, 2L90 will be uprated for the conductor to operate continuously at up to 90˚C by October 2025. [redacted]

[redacted]

SON and the adjacent transmission system is descripted in Figure 1-1 below.

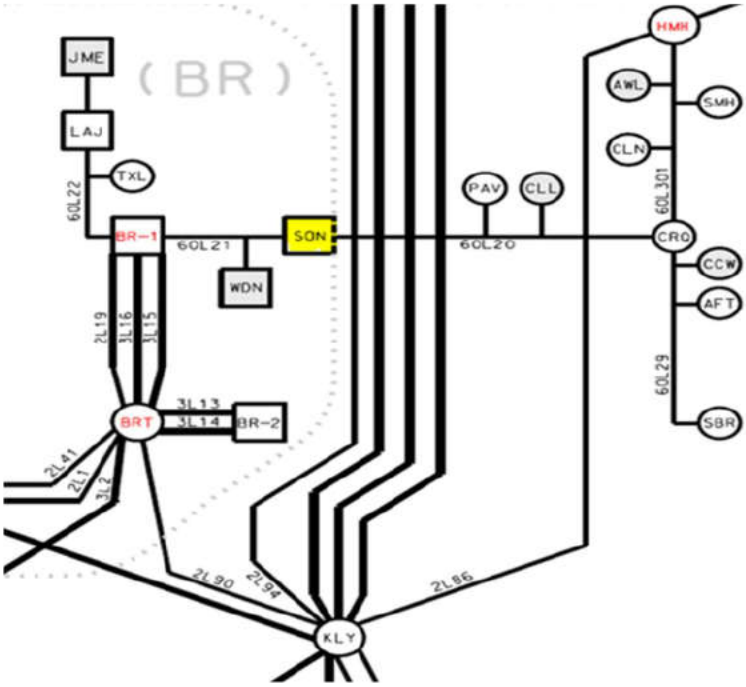

Figure 1-1: SON and Adjacent Transmission System

2 Purpose of Study

The purpose of this SIS is to assess the impact of the interconnection of the proposed project on the BC Hydro transmission system per BC Hydro's Open Access Transmission Tariff (OATT). This study will identify any constraints and suggest network upgrade options to obtain adequate performance for reliable operation of the transmission system.

The SIS is performed in compliance with the North American Electric Reliability Corporation (NERC) and Western Electricity Coordinating Council (WECC) reliability standards, and the BCH transmission planning criteria, specifically:

- NERC standards: FAC-002-3 and TPL-001-4;
- WECC criteria: TPL-001-WECC-CRT-3.2;
- BC Hydro's 60 kV to 500 kV Technical Interconnection Requirements for Power Generators per FAC-001-3;
- BC Hydro's Transmission Asset Planning FAC-002-3 Study Guide.

3 Scope of Study

This study investigates and addresses the voltage and overloading issues of the transmission system in the vicinity of the SON project for the long term planning horizon as a result of the proposed GTR project at SON. Studies completed include steady-state studies, dynamics studies and short circuit analysis to evaluate system performance, as well as protection coordination, operation flexibility, telecom requirements and high level remedial action scheme (RAS) requirements. BC Hydro planning methodology and criteria are used in the studies as stated in the Purpose of Study.

4 Assumptions and Conditions

- The study cases are established based upon the IC's submission dated Nov. 4, 2021. BC Hydro 2029 light summer, 2029 heavy summer and 2028 heavy winter load/generation conditions were selected and modelled in the cases used for this study. The above selected cases are more stringent compared to those cases for next a few years as the area loads are expected to increase and consume additional local generation in this resource rich area. In the above three cases the CKY/BRR/UHT/WAH areas' generation output levels are set to their maximum power outputs.
- Higher queued projects are represented in these base cases, including Wahleach Generating Station (WAH) Refurbishment project and Bridge River #1 Generating Station (BR1) Units 1-4 upgrade Project.
- The 2L90 thermal upgrade for the conductor to operate continuously at up to 90˚C is included in the study.
- The fault clearing times and generation shedding times are listed in Table 5-2 of Section 5.2.

5 System Studies and Results

5.1 Steady State Study

Power flow analysis under system normal (N-0 or P0) together with single and multiple contingencies specified in TPL-001-4 were performed to evaluate whether SON GTR project would cause any adverse impact in the nearby area.

This SON GTR project will result in a 3 MW increase of the plant's maximum power injection. This marginal increase of power injection is expected to have a limited impact on the bulk electric system rated at 100 kV and above. The local 60 kV transmission system is more likely to be impacted, thus becoming the focus of the study.

System Normal (N-0 or P0)

Below Table 5-1 shows the loading and voltage profiles of the concerned transmission elements under 2029 light summer and heavy summer system normal condition (N-0 or P0).

Table 5-1: Power flow results under 2029 light summer and heavy summer system normal conditions (N-0 or P0)

cases	System Condition	Line loading						Bus Voltage		
		60L20 Rating (MVA) Summer: 45.7	60L21 Rating (MVA) Summer: 56.4	2L90 Rating (MVA) Summer: 403.9	2L1 Rating (MVA) Summer: 201.2	2L2 Rating (MVA) Summer: 318.7	ROS T1 Rating (MVA) Summer: 450	BR1 60 kV (pu)	SON 60 kV (pu)	BRT 230 kV (pu)
Light summer	System Normal	24.8	33.9	331.8	114.7	233.4	436.1	1 04	1.06	1.03
Heavy summer	System Normal	26.5	30.4	252.4	137.0	236 3	449 5	1 04	1.05	1 03

With the assumption of the 2L90 line upgrade in place, no any transmission element overload and unacceptable voltage profile was observed.

System with Contingencies

Certain contingences can cause various transmission elements overloads and unacceptable voltage profiles if no generation shedding/run-back are applied. The existing Bridge River System generation shedding RAS, as per OO 7T-14 and OO 7T-25 will be relied on to mitigate the overloading and voltage issues.

Power flow results under contingency conditions are not presented in the table because with adequate generation shedding there is no concern with these conditions.

5.2 Transient Stability Study

Transient stability simulations were performed on the 2029 light summer load scenarios for single and multiple contingencies in accordance with the TPL-1-004 planning standard. The stability simulation cases used the existing Bridge River system generation shedding RAS where necessary.

With adequate generation shedding RAS specified in OO 7T-14 and OO 7T-25, system stability performance with the SON GTR project was shown to be acceptable.

A few selected transient stability study results are listed in Table 5-2 below.

Table 5-2: Selected Transient Stability Study Results for 2029 Light Summer Cases

NERC TPL-001-4 Category / 60 kV system	Cases	Contingencies	Fault Locations	Fault Clearing Time (Cycles)		Generation Shedding Time (Cycles)	Generation Shedding Required	Transient Stability
				Close End	Far End			
Local 60 kV system	1	60L20	At SON end	6	40	12	yes	Acceptable
	2	60L21	At BR1 end	6	20	15	yes	Acceptable
	3	60L22	At BR1 end	6	30	14	yes	Acceptable
P1	4	2L19 (BRT T4 will be isolated)	At BR1 end	6	7	12	yes	Acceptable
	5	3L2	At BRT end	5	6	12	yes	Acceptable
	6	3L5	At UHT end	5	6	12	yes	Acceptable
	7	BRT T4	At BRT 345 kV end	5	6	12	yes	Acceptable
	8	2L1	At BRT end	6	7	12	yes	Acceptable
	9	2L2	At TIS end	6	7	12	yes	Acceptable
	10	2L9	At CKY end	6	7	12	yes	Acceptable
	11	2L13	At CKY end	6	7	12	yes	Acceptable
	12	2L78	At ROS end	6	7	12	yes	Acceptable
	13	2L90	At BRT end	6	7	12	yes	Acceptable
P6	14	2L78 (with 2L90 already OOS)	At ROS end	6	7	12	yes	Acceptable

5.3 Fault Analysis

The short circuit analysis for the SIS is based upon the latest BC Hydro system model, which includes project equipment and impedances provided by the IC. Thevenin impedances for the near-term system conditions and the ultimate fault levels at POI are not included in this report but will be made available to the IC upon request.

5.4 Remedial Action Scheme

RAS functional requirements study/analysis has been performed for the critical contingencies under system normal, N-1 conditions in Bridge River regional system.

No new RAS function is required. The generation shedding requirements for the existing SON G1 is applicable to the unit after the SON GTR project.

There is an existing issue that when 60L21 is out of service (OOS), 60L29 phase fault will result in unstable response of SON generator if it runs at high output. To resolve the SON generator instability concern when 60L21 is OOS, CRQ 60CB2 breaker failure protection is used to clear fault on 60L29, and also trips 60L20 and opens 60L301 at CRQ end. To use 60CB2 breaker failure protection to clear fault on 60L29, bypassing CRQ 60CB2 is required when 60L21 is OOS. This protection scheme is deemed acceptable after the SON GTR project.

5.5 Station Upgrade Requirements

No station work is required for this project.

5.6 Protection, Control and Telecommunications

5.6.1 Protection

The existing protections will stay; however, protection settings will be revised per the new generator rating and load tests. Setting revisions will be reviewed per PRC-025 and PRC-019 requirements.

Protection coordination and fault level checking will be performed per PRC-027 requirements. SON 12 kV distribution bus fault levels are expected to change by more than +/- 10% as part of this scope of work. During the implementation stage, Thevenin Source Impedances will be provided to the Distribution Engineer responsible for re-coordinating the protection on the feeder(s).

5.6.2 Control

Alarms for the new equipment and protection systems will be provided in accordance with standardized alarm guidelines.

Remote data access will be provided if new relays are used .

Database and displays at Fraser Valley Office (FVO) and South Interior Office (SIO) will be updated to accommodate any alarm changes.

5.6.3 Telecommunication

No telecommunication work is required from this project.

6 Cost Estimate and Schedule

The expected Protection & Control supporting work for this project is assumed to be a part of the overall SON GTR budget and will be done before and during the generator commissioning process, along with the required coordination with

FVO/SIO and field personnel as well as the PSS tuning study before commissioning.

7 Conclusions

With adequate generation shedding specified in OO 7T-14 and OO 7T-25, the system performance after the SON GTR project is acceptable under system normal and contingent conditions. No system upgrade is identified in this SIS.

The generation shedding RAS requirements for the existing SON generating unit are applicable to the unit after the SON GTR project.

Appendix 1: Power Flow and Dynamic Models and Data

SON Step up transformer data

T1 34.2/57 MVA, 66/13.8 kV, Impendence HL Z1=6.57%

SON generator, exciter, compensator, stabilizer, governor models and parameters

Generator: Unit Rating 50 MVA, 45 MW, 13.8 kV; +0.9, -0.9 pf, and Ra= 0.00 pu

Table A-1 PSS/E Generator Model: GENTPJU1

T'_{do}	T''_{do}	T'_{qo}	T''_{qo}	H	D	X_d	X_q	X'_d	X'_q	$X''_d = X''_q$	X_l	S(1.0)	S(1 2)	K_{is}
5.651	0 052	0.0	0.0418	2.34	0.0	0.986	0.645	0.451	0.645	0.417	0.133	0.117	0.408	0.08

Table A-2 PSS/E Excitation System Model: ESST4B

Tr	Kpr	Kir	Vrmax	Vrmin	Ta	Kpm	Kim	Vmmax	Vmmin	Kg	Kp	Ki	Vbmax	Kc	Xl	ThEtap
0	85	3	10	-10	0 01	1	0	6.29	-3 84	0	1	0	6 29	0.08	0	0

Table A-3 PSS/E Power System Stabilizer Model: PSS2A

M	N	TW1	TW2	T6	TW3	TW4	T7	KS2	KS3
3	2	5 0	5.0	0 0	5.0	0.0	5.0	0 896	1.0
T8	T9	KS1	T1	T2	T3	T4	VSTMAX	VSTMIN	
0.25	0.1	4	0.15	0.04	0.15	0 04	0.10	-0.10	

Table A-4 PSS/E Turbine-Governor Model: HYG3U1

Rgate	Relec	Tt	Td	K2	Ki	Kd	Tf	Kg	Tp	Vel open	Vel close
0 0	0.04	0.2	0 05	1.1	0 2	0.15	0.1	2	0.1	0 063	0.078
Pmax	Pmin	db	Gv1	Pgv1	Gv2	Pgv2	Gv3	Pgv3	Gv4	Pgv4	Gv5
1	0	0.0	0.13	0	0 3	0.18	0.5	0.46	0.7	0.74	0 9
Pgv5	Gv6	Pgv6	H0	qnl	Tw	At	Dturb	Trate	Db1h	Err1	Db1l
0.92	1.0	1.0	1.0	0.13	2 3	1 2	0.13	45	0.0	0.0	0 0