APPENDIX B – CATALOGUE THERMAL DATA SHEETS

CATALOGUE INDEX

Introduction **B.0.i**

1.0 Window Wall **B.1.i**

2.0 Conventional Curtain Wall **B.2.i**

3.0 Unitized Curtain Wall **B.3.i**

4.0 High Performance Curtain Wall **B.4.i**

5.0 Steel-Frame Construction **B.5.i**

6.0 Metal Buildings **B.6.i**

7.0 Concrete Construction **B.7.i**

8.0 Wood-Frame and Timber Construction **B.8.i**

9.0 Doors and Balconies **B.9.i**

10.0 Roofs **B.10.i**

Introduction

Introduction

Appendix B contains the catalogue of thermal performance data sheets for all the details available for this guide. The thermal performance information includes U-values, transmittance values and condensation indices. Appendix B consists of a Visual Summary of the details, followed by the Catalogue with full thermal information for each detail.

Catalogue Index
1. Window Wall
2. Conventional Curtain Wall
3. Unitized Curtain Wall
4. High Performance Curtain Wall
5. Steel-Framed Construction
6. Metal Buildings
7. Mass Walls
8. Wood-Frame and Timber Construction
9. Balconies and Doors
10. Roofs

Each thermal data sheet, along with its matching material data sheet, is meant to be standalone. For instance, Detail 5.2.5 is a balcony slab detail for a steel stud assembly. That data sheet contains the material information for both the slab detail, and the clear field steel stud assembly above and below it. The clear field steel stud assembly material data sheet 5.1.14 is not additionally required to analyze the slab detail. Additionally, some assemblies contain more than one interface detail, so while they are arranged by major detail type (slab, then parapet etc.), there may be other interface details contained within it. Each thermal data sheet contains the thermal performance values for all interface details contained within that assembly detail. Note that some clear field assemblies do not have their own individual thermal data sheet and may be included within other thermal data sheets. For instance, there is no separate clear field data sheet for an interior insulated concrete wall, however there is clear field data available for that wall within the slab interface detail 7.2.2.

Modelling Assumptions

- Exterior surfaces and air spaces include convection, conduction and radiation heat exchange.
- The models were evaluated at non-dimensionalized temperatures, where 0 is the exterior temperature and 1 is the interior. This was done to allow the results to be applicable to any temperature difference. See condensation indices below for more information.
- The model was analyzed at steady state, so thermal mass is not taken into account within assembly U-values.
- Air leakage was not taken into account. It was assumed materials were well fit together
- Contact resistances between materials were used

Additional modeling parameters and assumptions can be found in Section 5 of ASHRAE 1365-RP.

Thermal Data Sheets

Each thermal data sheet contains several pieces of information. An example thermal data sheet is shown below with a description for each section following.

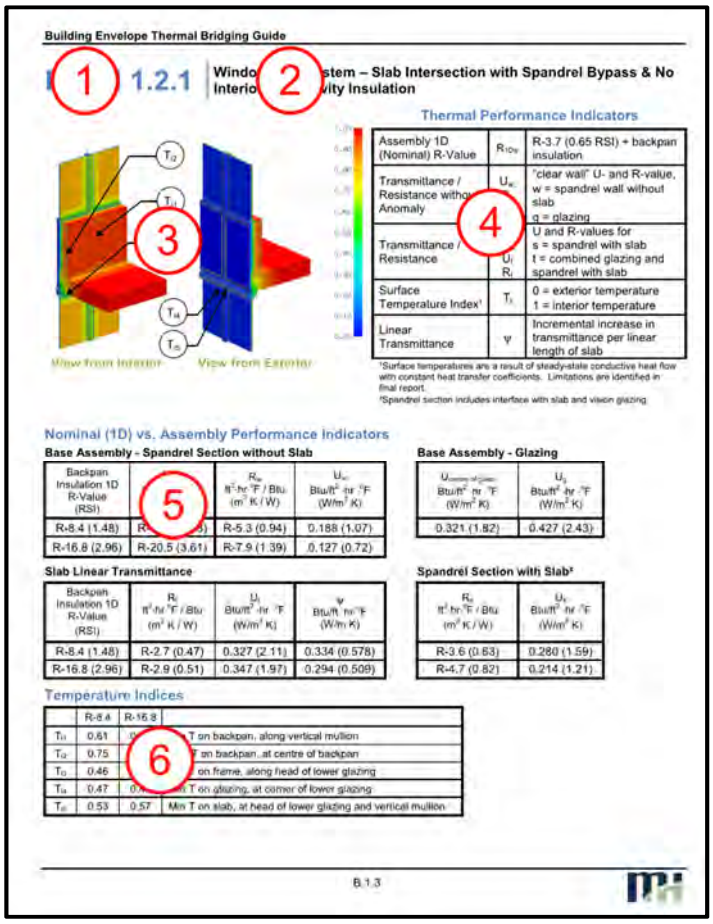

1) Detail Name

Each detail is named based on position within the catalogue index. The first number **1.**x.x indicates the construction type according to the main index (ie 1 is Window-Wall, 5 is Steel Framed, 8 is Wood Framed etc). The second number x.**1.**x indicates detail group (ie. 1 is clear field values, 2 may be all slabs and 3 may be all parapets). The last number x.x.**1.** is simply the order in which the detail appears within that grouping (ie slab detail 1, slab detail 2 etc).

2) Detail Description

A basic description is included that denotes the construction system or type, along with additional detail identifiers such as limited dimension information, transmittance type and insulation locations

3) Thermal Image

An isometric thermal image from the interior and from the exterior is provided, along with a non-dimensionalized temperature scale and key locations for temperature indices, see condensation indices below. While temperatures could be read off these images, they are meant to give a general look at where the areas of high heat flow are.

4) Thermal Performance Legend

A thermal performance legend is provided denoting terms and subscripts for the thermal values that follow.

5) Thermal Values

The thermal data sheets contain several types of thermal performance indicators. If one or more assemblies are present on a detail, there will typically be multiple tables present, one for each assembly and one for the averaged values for all the assemblies combined. For clear field thermal data sheets, they typically have all the information contained within one table, however for curtain wall and window wall assembly clear field thermal data sheets; they also include the glazing data. In these instances, the spandrel clear field value and glazing values are in two separate tables, along with a combined assembly that is an average of the glazing and spandrel combined.

For interface detail thermal data sheets, each type of interface detail present in a single assembly has their own table, along with a separate table for the clear field values. There may be multiple ways the clear field values are presented. If there is only one clear field assembly, all values for the detail are given in a single table and the clear field values are presented as U_o and R_o. If there are multiple clear field assemblies or multiple interface transmittances in a single detail, the clear field values for each clear field assembly will be presented in a “Base Assembly” table. This is usually the case when there are glazing assemblies involved.

The thermal values provided in these tables are as follows:

- Insulation 1D R-value is the value of insulation if it is varied within the model. This is typically the exterior insulation or backpan insulation amount.
- R_{1D} is the combined thermal resistance of all the materials in a clear field assembly. This is the value of the assembly if there were absolutely no thermal bridging.
- R_o and U_o is the clear field thermal resistance and transmittance when there is only one base clear field assembly.
- R_x and U_x is the thermal resistance and transmittance for base assembly "X" when there are multiple clear field assemblies. Be aware of the subscripts given in the Thermal Performance legend. The subscript may not always represent a clear field assembly value.
- $U_{center\ of\ glass}$ and U_g are the thermal transmittances through the 1D center of glass and the overall glazing assembly respectively.
- R and U are modeled assembly thermal resistance and transmittance that include the effects of interface details for the specific size of the modeled assembly. There may be additional subscripts if the assembly contains multiple interface details, please be aware of the subscript labels given in the Thermal Performance Legend. This is important for details with glazing, such as window wall and curtain wall. The thermal values for the combined assembly with spandrel and glazing may be wanted, however as glazing can be dealt with separately, most designers will only want the information on the spandrel, therefore the spandrel only values with the slab are given separately.
- Ψ is the linear transmittance value. There may be additional subscripts if there are multiple interface details within one assembly
- X is the point transmittance value. There may be additional subscripts if there are multiple interface details within one assembly
- T_{ix} is the condensation indice for location x

6) Condensation Indices

The thermal data sheets also provide surface temperatures of assembly components that could be exposed to interior air to help locate potential areas of risk for condensation. In order to be applicable for any climate (varying indoor and outdoor temperatures), the temperatures are non-dimensionalized into a temperature index, T_i, as shown below

$$T_i = \frac{T_{surface} - T_{outside}}{T_{inside} - T_{outside}}$$

The index is the ratio of the surface temperature relative to the interior and exterior temperatures. The temperature index has a value between 0 and 1, where 0 is the exterior temperature and 1 is the interior temperature. If T_i is known, the above equation can be rearranged for $T_{surface}$. Note that these not meant as absolute temperatures and are only given as guidance on potential regions of condensation. There are many factors that can affect the formation of condensation that are not included in the modeling. For more discussion, see section 5.3 of ASHRAE 1365-RP.

7) At-Ground Transitions

Some details contain at-grade transitions. The Ψ-value can be used like any other linear transmittance; however it is calculated differently. Heat flow at slab on grade transitions is calculated by L-value based on ISO 10211: 2007. The L-value is simply the overall heat flow of the slab on grade per unit length of the slab perimeter. It is based on the assumption that the overall steady state heat flow though slab on grade is dominated by the perimeter, similar to F-factors referenced in ASHRAE 90.1.

Wall and floor junctions with slab on grade are still characterized by linear transmittance. The linear transmittance at wall to floor junctions are calculated by subtracting the L-value of the overall assembly by the L-value of the slab and thermal transmittance of the clear wall per unit width as shown by the equation below:

$$\Psi = L_{2Dt} - L_{2Df} - U_{ow} * H_w$$

Where:

Ψ = Linear transmittance of wall/ slab on grade transition
L_{2Dt} = Heat flow of overall assembly per unit length of slab perimeter
L_{2Dt} = Heat flow of slab edge per unit length of slab perimeter
U_{ow} = U-value of the clear wall
H_w = Height of the clear wall in the overall modeled assembly

8) PDF Version

With the PDF version of the catalogue, each entry in the catalogue index is linked to each construction section. Within each section, there is an additional index for the details, which are also linked directly to each detail thermal sheet. To return to the index, simply click on the Building Envelope Thermal Bridging Guide header.

1.0 Window Wall

Detail 1.1.1 ..... **B.1.1**

Window Wall System – Spandrel Panel Clear Wall with No Interior Stud Cavity Insulation

Detail 1.1.2 ..... **B.1.2**

Window Wall System – Spandrel Panel Clear Wall with Interior Sprayfoam Insulation

Detail 1.2.1 ..... **B.1.3**

Window Wall System – Intermediate Floor Intersection with Spandrel Bypass & No Interior Stud Cavity Insulation

Detail 1.2.2 ..... **B.1.4**

Window Wall System – Intermediate Floor Intersection with Spandrel Bypass & Interior Sprayfoam Insulation

Detail 1.2.3 ..... **B.1.5**

Window Wall System with 3’ x 3’ Spandrel Section – AIM Applications at Intermediate Floor Intersection

Detail 1.2.4 ..... **B.1.6**

Window Wall System – Triple Glazed Insulated Frame at Slab Intersection with Improved Spandrel Bypass & No Interior Stud Cavity Insulation

Detail 1.2.5 ..... **B.1.7**

Window Wall System – Full Height Spandrel at Slab Intersection with Spandrel Bypass & No Interior Stud Cavity Insulation

Detail 1.2.6 ..... **B.1.8**

Window Wall System – Full Height Spandrel at Slab Intersection with Spandrel Bypass & Interior Sprayfoam Insulation

Detail 1.2.7 ..... **B.1.9**

Window Wall System – Full Height Insulated Frame at Slab Intersection with Improved Spandrel Bypass & No Interior Stud Cavity Insulation

Detail 1.2.8 ..... **B.1.10**

Window Wall System – Full Height Insulated Frame at Slab Intersection with Hybridized Clipped Spandrel & No Interior Stud Cavity Insulation

Detail 1.2.9 ..... **B.1.11**

Window Wall System with Upstand Spandrel Section – Intermediate Floor Intersection with Spandrel Bypass and no Interior Stud Cavity Insulation

Detail 1.2.10 ..... **B.1.12**

Window Wall System with Full Height Vision Section – Intermediate Floor Intersection with Spandrel Bypass and no Interior Stud Cavity Insulation

Detail 1.3.1 ..... **B.1.13**

Window Wall System – Un-insulated Concrete Parapet & Roof Intersection

Detail 1.3.2 ..... **B.1.14**

Window Wall System – Partially Insulated Concrete Parapet & Roof Intersection

Detail 1.4.1 ..... B.1.15

Window Wall System – Inside Corner with Spandrel to Vision Transition & No Interior Stud Cavity Insulation

Detail 1.4.2 ..... B.1.16

Window Wall System – Inside Corner with Spandrel to Vision Transition & Interior Sprayfoam Insulation

Detail 1.5.1 ..... B.1.17

Window Wall System with Insulated Spandrel Panel – Uninsulated Interior Concrete Wall and Intermediate Floor Intersection

Detail 1.5.2 ..... B.1.18

Window Wall System with Insulated Spandrel Panel – Insulated Interior Concrete Wall and Intermediate Floor Intersection

Detail 1.1.1

Window Wall System – Spandrel Panel Clear Wall with No Interior Stud Cavity Insulation

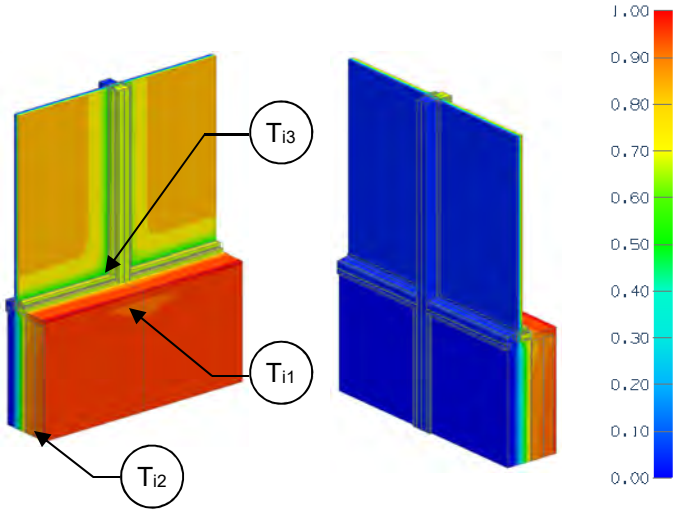

View from Interior View from Exterior

Thermal Performance Indicators

Assembly 1D (Nominal) R-Value	R_{1D}	R-3.2 (0.55 RSI) + backpan insulation
Transmittance / Resistance	U_w, R_w, U_g	U-value and R-value for w = spandrel wall g = glazing, including framing
Transmittance / Resistance	U, R	U- and R-values for overall assembly
Surface Temperature Index[1]	T_i	0 = exterior temperature 1 = interior temperature

[1]Assumptions and limitations for surface temperatures identified in ASHRAE 1365-RP

Nominal (1D) vs. Assembly Performance Indicators

Spandrel Section

Backpan Insulation 1D R-Value (RSI)	R_{1D} ft²·hr·°F / Btu (m² K / W)	R_w ft²·hr·°F / Btu (m² K / W)	U_w Btu/ft² ·hr ·°F (W/m² K)
R-8.4 (1.48)	R-11.6 (2.04)	R-6.3 (1.11)	0.158 (0.90)
R-12.6 (2.22)	R-15.8 (2.78)	R-7.1 (1.26)	0.140 (0.80)
R-16.8 (2.96)	R-20.0 (3.52)	R-7.6 (1.33)	0.132 (0.75)

Glazing

$U_{centre\ of\ glass}$ Btu/ft² ·hr ·°F (W/m² K)	U_g Btu/ft² ·hr ·°F (W/m² K)
0.321 (1.82)	0.408 (2.32)

Combined Assembly

Backpan Insulation 1D R-Value (RSI)	R ft²·hr·°F / Btu (m² K / W)	U Btu/ft² ·hr ·°F (W/m² K)
R-8.4 (1.48)	R-3.2 (0.56)	0.314 (1.79)
R-12.6 (2.22)	R-3.2 (0.57)	0.308 (1.75)
R-16.8 (2.96)	R-3.3 (0.58)	0.305 (1.73)

Temperature Indices

	R8.4	R12.6	R16.8	
T_{i1}	0.63	0.64	0.65	Min T in stud cavity, on frame at backpan
T_{i2}	0.77	0.80	0.82	Max T on backpan, at center of backpan
T_{i3}	0.57	0.58	0.59	Min T on interior glazing, at corner of glazing

Detail 1.1.2

Window Wall System – Spandrel Panel Clear Wall with Interior Sprayfoam Insulation

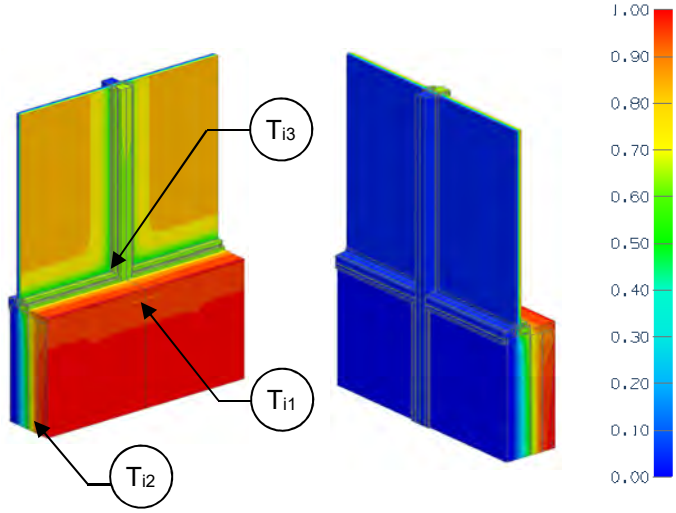

View from Interior View from Exterior

Thermal Performance Indicators

Assembly 1D (Nominal) R-Value	R_{1D}	R-15.1 (2.67 RSI) + backpan insulation
Transmittance / Resistance	U_w, R_w U_g	U-value and R-value for w = spandrel wall g = glazing, including framing
Transmittance / Resistance	U, R	U- and R-values for overall assembly
Surface Temperature Index[1]	T_i	0 = exterior temperature 1 = interior temperature

[1]Assumptions and limitations for surface temperatures identified in ASHRAE 1365-RP

Nominal (1D) vs. Assembly Performance Indicators

Clear Wall Spandrel Section

Backpan Insulation 1D R-Value (RSI)	R_{1D} ft²·hr·°F / Btu (m² K / W)	R_w ft²·hr·°F / Btu (m² K / W)	U_w Btu/ft² ·hr ·°F (W/m² K)
R-8.4 (1.48)	R-23.5 (4.15)	R-9.0 (1.59)	0.111 (0.63)
R-12.6 (2.22)	R-27.7 (4.89)	R-9.8 (1.72)	0.102 (0.58)
R-16.8 (2.96)	R-31.9 (5.63)	R-10.4 (1.82)	0.097 (0.55)

Glazing

$U_{centre\ of\ glass}$ Btu/ft² ·hr ·°F (W/m² K)	U_g Btu/ft² ·hr ·°F (W/m² K)
0.321 (1.82)	0.408 (2.32)

Combined Assembly

Backpan Insulation 1D R-Value (RSI)	R ft²·hr·°F / Btu (m² K / W)	U Btu/ft² ·hr ·°F (W/m² K)
R-8.4 (1.48)	R-3.4 (0.59)	0.297 (1.68)
R-12.6 (2.22)	R-3.4 (0.60)	0.293 (1.67)
R-16.8 (2.96)	R-3.4 (0.60)	0.291 (1.65)

Temperature Indices

	R8.4	R12.6	R16.8	
T_{i1}	0.74	0.75	0.76	Min T in stud cavity, on sprayfoam in line with vertical frame
T_{i2}	0.93	0.94	0.94	Max T on sprayfoam, in line with center of backpan
T_{i3}	0.53	0.54	0.54	Min T on interior glazing, at corner of glazing

Detail 1.2.1

Window Wall System – Intermediate Floor Intersection with Spandrel Bypass & No Interior Stud Cavity Insulation

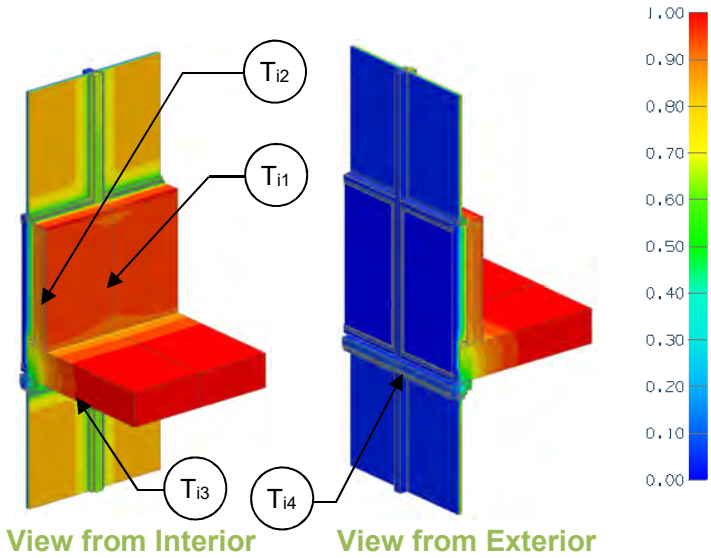

Thermal Performance Indicators

Assembly 1D (Nominal) R-Value	R_{1D}	R-3.2 (0.55 RSI) + backpan insulation
Transmittance / Resistance without Anomaly	U_w, R_w, U_g	"clear wall" U- and R-value, w = spandrel wall without slab g = glazing
Transmittance / Resistance	U_s, R_s, U_t, R_t	U and R-values for s = spandrel with slab t = combined glazing and spandrel with slab
Surface Temperature Index[1]	T_i	0 = exterior temperature 1 = interior temperature
Linear Transmittance	ψ	Incremental increase in transmittance per linear length of slab

[1]Assumptions and limitations for surface temperatures identified in ASHRAE 1365-RP

[2]Spandrel section includes interface with slab and vision glazing.

Nominal (1D) vs. Assembly Performance Indicators

Base Assembly – Clear Wall Spandrel Section

Backpan Insulation 1D R-Value (RSI)	R_{1D} ft²·hr·°F / Btu (m² K / W)	R_w ft²·hr·°F / Btu (m² K / W)	U_w Btu/ft² ·hr ·°F (W/m² K)
R-8.4 (1.48)	R-11.6 (2.03)	R-6.3 (1.11)	0.158 (0.90)
R-12.6 (2.22)	R-15.7 (2.77)	R-7.1 (1.26)	0.140 (0.80)
R-16.8 (2.96)	R-19.9 (3.51)	R-7.6 (1.33)	0.132 (0.75)

Base Assembly - Glazing

$U_{centre\ of\ glass}$ Btu/ft² ·hr ·°F (W/m² K)	U_g Btu/ft² ·hr ·°F (W/m² K)
0.321 (1.82)	0.408 (2.32)

Slab Linear Transmittance

Backpan Insulation 1D R-Value (RSI)	R_t ft²·hr·°F / Btu (m² K / W)	U_t Btu/ft² ·hr ·°F (W/m² K)	ψ Btu/ft ·hr·°F (W/m K)
R-8.4 (1.48)	R-2.8 (0.49)	0.358 (2.03)	0.350 (0.606)
R-12.6 (2.22)	R-2.8 (0.50)	0.353 (2.00)	0.359 (0.622)
R-16.8 (2.96)	R-2.8 (0.50)	0.350 (1.99)	0.363 (0.628)

Spandrel Section with Slab[2]

R_s ft²·hr·°F / Btu (m² K / W)	U_s Btu/ft² ·hr ·°F (W/m² K)
R-3.6 (0.64)	0.275 (1.56)
R-3.8 (0.68)	0.260 (1.48)
R-3.9 (0.70)	0.253 (1.44)

Temperature Indices

	R8.4	R12.6	R16.8	
T_{i1}	0.60	0.63	0.63	Min T in stud cavity, on frame at backpan
T_{i2}	0.75	0.78	0.80	Max T on backpan, at center of backpan
T_{i3}	0.51	0.51	0.51	Min T on interior glazing, at corner of deflection header
T_{i4}	0.54	0.54	0.54	Min T on slab, at head of lower glazing and vertical mullion

Detail 1.2.2

Window Wall System – Intermediate Floor Intersection with Spandrel Bypass & Interior Sprayfoam Insulation

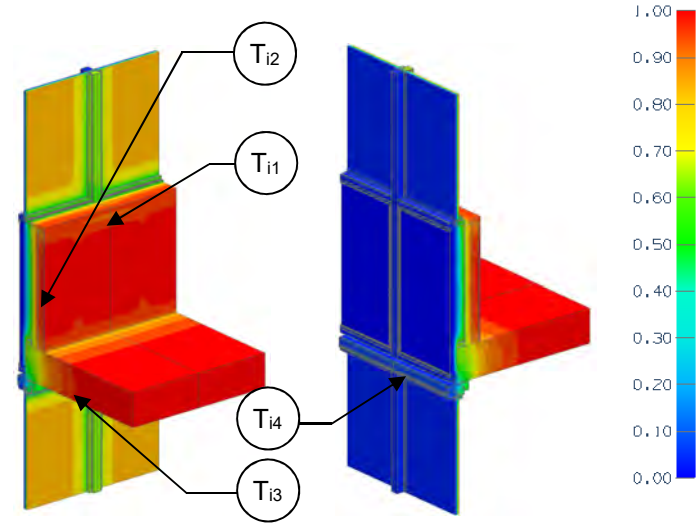

View from Interior View from Exterior

Thermal Performance Indicators

Assembly 1D (Nominal) R-Value	R_{1D}	R-15.1 (2.67 RSI) + backpan insulation
Transmittance / Resistance without Anomaly	U_w, R_w, U_g	"clear wall" U- and R-value, w = spandrel wall without slab g = glazing
Transmittance / Resistance	U_s, R_s, U_t, R_t	U and R-values for s = spandrel with slab t = combined glazing and spandrel with slab
Surface Temperature Index[1]	T_i	0 = exterior temperature 1 = interior temperature
Linear Transmittance	ψ	Incremental increase in transmittance per linear length of slab

[1]Assumptions and limitations for surface temperatures identified in ASHRAE 1365-RP

[2]Spandrel section includes interface with slab and vision glazing.

Nominal (1D) vs. Assembly Performance Indicators

Base Assembly – Clear Wall Spandrel Section

Backpan Insulation 1D R-Value (RSI)	R_{1D} ft²·hr·°F / Btu (m² K / W)	R_w ft²·hr·°F / Btu (m² K / W)	U_w Btu/ft² ·hr ·°F (W/m² K)
R-8.4 (1.48)	R-23.5 (4.15)	R-9.0 (1.59)	0.111 (0.63)
R-12.6 (2.22)	R-27.7 (4.89)	R-9.8 (1.72)	0.102 (0.58)
R-16.8 (2.96)	R-31.9 (5.63)	R-10.4 (1.82)	0.097 (0.55)

Base Assembly - Glazing

$U_{centre\ of\ glass}$ Btu/ft² ·hr ·°F (W/m² K)	U_g Btu/ft² ·hr ·°F (W/m² K)
0.321 (1.82)	0.408 (2.32)

Slab Linear Transmittance

Backpan Insulation 1D R-Value (RSI)	R_t ft²·hr·°F / Btu (m² K / W)	U_t Btu/ft² ·hr ·°F (W/m² K)	ψ Btu/ft ·hr·°F (W/m K)
R-8.4 (1.48)	R-2.9 (0.51)	0.344 (1.95)	0.377 (0.652)
R-12.6 (2.22)	R-2.9 (0.52)	0.340 (1.93)	0.376 (0.651)
R-16.8 (2.96)	R-3.0 (0.52)	0.339 (1.92)	0.380 (0.658)

Spandrel Section with Slab[2]

R_s ft²·hr·°F / Btu (m² K / W)	U_s Btu/ft² ·hr ·°F (W/m² K)
R-4.2 (0.74)	0.228 (1.29)
R-4.4 (0.77)	0.228 (1.29)
R-4.5 (0.79)	0.223 (1.27)

Temperature Indices

	R8.4	R12.6	R16.8	
T_{i1}	0.73	0.74	0.75	Min T in stud cavity, on sprayfoam in line with vertical frame
T_{i2}	0.93	0.93	0.94	Max T on sprayfoam, in line with center of backpan
T_{i3}	0.51	0.51	0.51	Min T on interior glazing, at corner of deflection header
T_{i4}	0.53	0.53	0.53	Min T on slab, at deflection header, in line with vertical frame

Detail 1.2.3

Window Wall System with 3' x 3' Spandrel Section – AIM Applications at Intermediate Floor Intersection

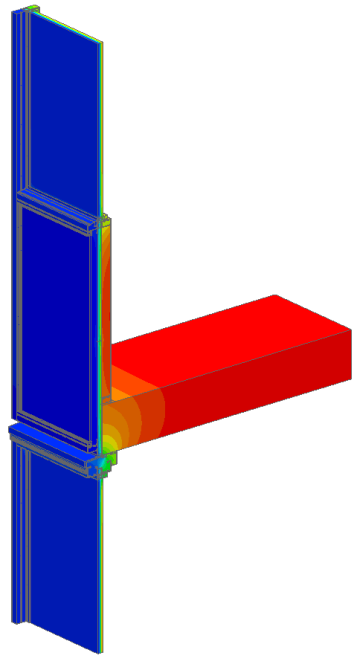

View from Exterior

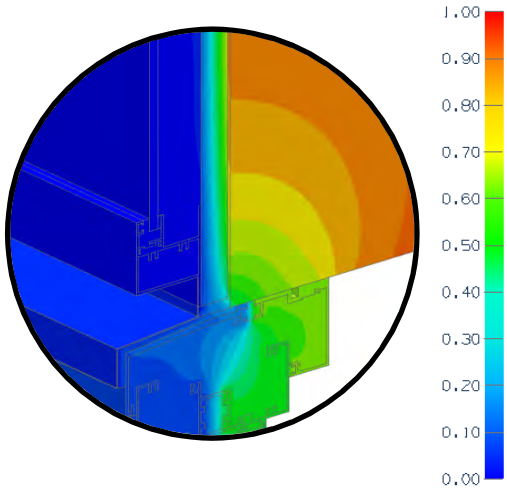

Mullion Detail

Thermal Performance Indicators

Transmittance / Resistance	U_s, R_s	Spandrel Section U-value and "Effective" R-value (including slab)
	U_g, R_g	Glazing U-value and "Effective" R-value
	U_t, R_t	Total Assembly U-value and "Effective" R-value

[1]U_t based on a window to wall ratio of 40%

AIM = Architectural Insulation Module

Scenarios

Scenario	Vision Glass and Spacer	Insulation Thickness and Application	AIM Spacer/Edge Condition
G1	Double Glazed with Silicone Warm Edge Spacer	0.75" (19 mm) AIM adhered to Frame	None
G2	Double Glazed with Silicone Warm Edge Spacer	0.75" (19 mm) AIM adhered to Frame + 2" (51 mm) Mineral Wool in Backpan	None

Nominal (1D) vs. Assembly Performance Indicators

Scenario	Insulation R-Value (RSI)	U_s Btu/ft^2 ·hr ·°F (W/m^2 K)	R_s ft^2·hr·°F / Btu (m^2 K / W)	U_g Btu/ft^2 ·hr ·°F (W/m^2 K)	R_g ft^2·hr·°F / Btu (m^2 K / W)	U_t[1] Btu/ft^2 ·hr ·°F (W/m^2 K)	R_t ft^2·hr·°F / Btu (m^2 K / W)
G1	R-29.3 (5.16)	0.111 (0.63)	R-9.0 (1.58)	0.475 (2.70)	R-2.1 (0.37)	0.339 (1.93)	R-2.9 (0.52)
G2	R-37.7 (6.64)	0.107 (0.61)	R-9.3 (1.64)	0.474 (2.69)	R-2.1 (0.37)	0.337 (1.91)	R-3.0 (0.52)

Detail 1.2.4

Window Wall System – Triple Glazed Insulated Frame at Slab Intersection with Improved Spandrel Bypass & No Interior Stud Cavity Insulation

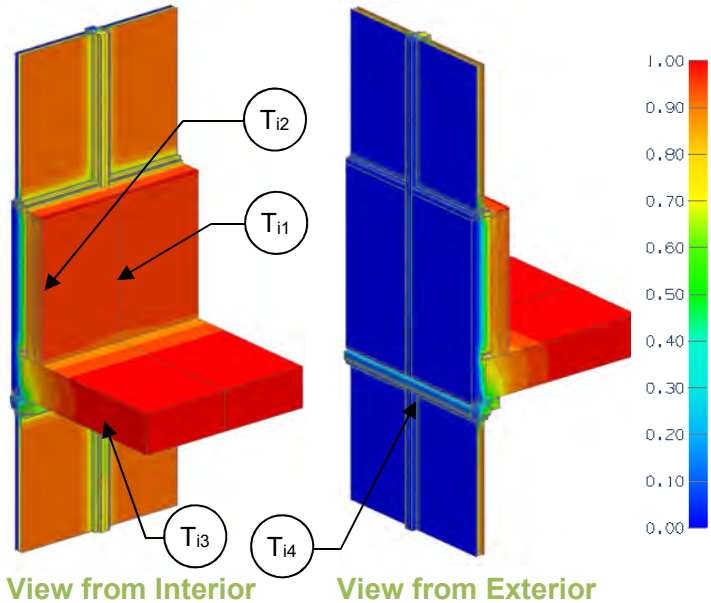

View from Interior View from Exterior

Thermal Performance Indicators

Assembly 1D (Nominal) R-Value	R_{1D}	R-3.2 (0.55 RSI) + backpan insulation
Transmittance / Resistance without Anomaly	U_w, R_w, U_g	"clear wall" U- and R-value, w = spandrel wall without slab g = glazing
Transmittance / Resistance	U_s, R_s, U_t, R_t	U and R-values for s = spandrel with slab t = combined glazing and spandrel with slab
Surface Temperature Index[1]	T_i	0 = exterior temperature 1 = interior temperature
Linear Transmittance	ψ	Incremental increase in transmittance per linear length of slab

[1]Assumptions and limitations for surface temperatures identified in ASHRAE 1365-RP
[2]Spandrel section includes interface with slab and vision glazing. Images are for Scenario A

Scenario

Scenario	Spandrel And Deflection Header
A	Triple Glazing Break, Improved Bypass, Standard Deflection Header
B	Triple Glazing Break, Improved Bypass, Deflection Header Thermal Break in line with Slab Insulation

Nominal (1D) vs. Assembly Performance Indicators

Base Assembly – Clear Wall Spandrel Section

Backpan Insulation 1D R-Value (RSI)	R_{1D} ft²·hr·°F / Btu (m² K / W)	R_w ft²·hr·°F / Btu (m² K / W)	U_w Btu/ft² ·hr ·°F (W/m² K)
R-12.6 (2.22)	R-15.7 (2.77)	R-8.4 (1.48)	0.119 (0.68)

Base Assembly - Glazing

$U_{centre\ of\ glass}$ Btu/ft² ·hr ·°F (W/m² K)	U_g Btu/ft² ·hr ·°F (W/m² K)
0.143 (0.81)	0.250 (1.42)

Slab Linear Transmittance

Scenario	Backpan Insulation 1D R-Value (RSI)	R_t ft²·hr·°F / Btu (m² K / W)	U_t Btu/ft² ·hr ·°F (W/m² K)	ψ Btu/ft ·hr·°F (W/m K)
A	R-12.6 (2.22)	R-4.2 (0.73)	0.241 (1.37)	0.321 (0.555)
B	R-12.6 (2.22)	R-4.7 (0.82)	0.214 (1.21)	0.104 (0.181)

Spandrel Section with Slab[2]

R_s ft²·hr·°F / Btu (m² K / W)	U_s Btu/ft² ·hr ·°F (W/m² K)
R-4.4 (0.78)	0.226 (1.28)
R-6.5 (1.14)	0.154 (0.87)

Temperature Indices

	A	B	
T_{i1}	0.69	0.70	Min T in stud cavity, on frame at backpan
T_{i2}	0.81	0.83	Max T on backpan, at center of backpan
T_{i3}	0.63	0.69	Min T on interior glazing, at corner of deflection header
T_{i4}	0.66	0.79	Min T on slab, at head of lower glazing and vertical mullion

Detail 1.2.5

Window Wall System – Full Height Spandrel at Slab Intersection with Spandrel Bypass & No Interior Stud Cavity Insulation

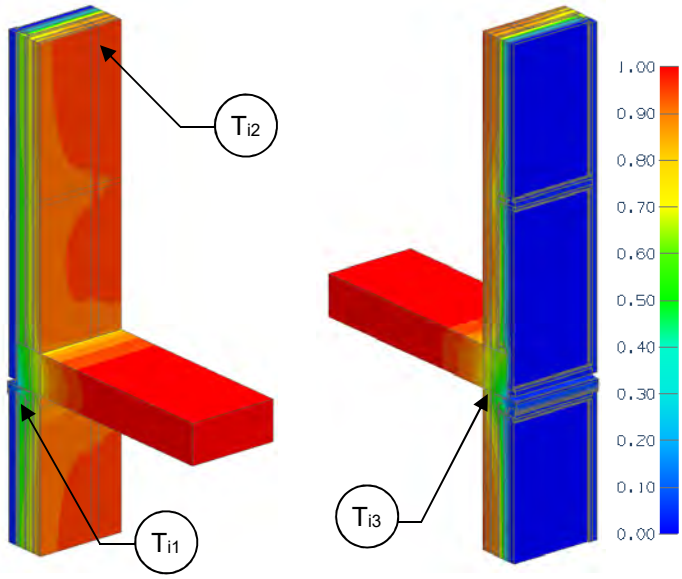

View from Interior View from Exterior

Thermal Performance Indicators

Assembly 1D (Nominal) R-Value	R_{1D}	R-3.2 (0.55 RSI) + backpan insulation
Transmittance / Resistance without Anomaly	U_w, R_w,	"clear wall" spandrel wall without slab U- and R-value
Transmittance / Resistance	U_s, R_s	U and R-values for spandrel with slab
Surface Temperature Index[1]	T_i	0 = exterior temperature 1 = interior temperature
Linear Transmittance	ψ	Incremental increase in transmittance per linear length of slab

[1]Assumptions and limitations for surface temperatures identified in ASHRAE 1365-RP

Nominal (1D) vs. Assembly Performance Indicators

Base Assembly – Clear Wall Spandrel Section

Backpan Insulation 1D R-Value (RSI)	R_{1D} ft²·hr·°F / Btu (m² K / W)	R_w ft²·hr·°F / Btu (m² K / W)	U_w Btu/ft² ·hr ·°F (W/m² K)
R-8.4 (1.48)	R-11.6 (2.03)	R-6.8 (1.20)	0.147 (0.84)
R-12.6 (2.22)	R-15.7 (2.77)	R-7.6 (1.34)	0.132 (0.75)
R-16.8 (2.96)	R-19.9 (3.51)	R-8.2 (1.44)	0.122 (0.69)

Slab Linear Transmittance

Backpan Insulation 1D R-Value (RSI)	R_s ft²·hr·°F / Btu (m² K / W)	U_s Btu/ft² ·hr ·°F (W/m² K)	ψ Btu/ft ·hr·°F (W/m K)
R-8.4 (1.48)	R-5.2 (0.91)	0.193 (1.10)	0.366 (0.634)
R-12.6 (2.22)	R-5.6 (0.98)	0.179 (1.02)	0.379 (0.655)
R-16.8 (2.96)	R-5.8 (1.03)	0.171 (0.97)	0.390 (0.675)

Temperature Indices

	R8.4	R12.6	R16.8	
T_{i1}	0.49	0.51	0.51	Min T in stud cavity, on frame at deflection header
T_{i2}	0.78	0.82	0.84	Max T on backpan, at center of backpan
T_{i3}	0.53	0.54	0.54	Min T on slab, above deflection header

Detail 1.2.6

Window Wall System – Full Height Spandrel at Slab Intersection with Spandrel Bypass & Interior Sprayfoam Insulation

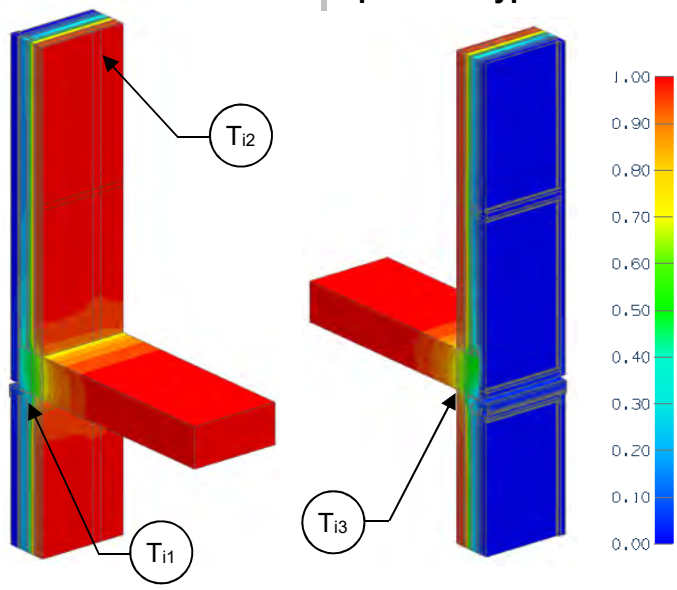

View from Interior View from Exterior

Thermal Performance Indicators

Assembly 1D (Nominal) R-Value	R_{1D}	Spandrel Wall, R-15.1 (2.67 RSI) + backpan insulation
Transmittance / Resistance without Anomaly	U_w, R_w,	"clear wall" spandrel wall without slab U- and R-value
Transmittance / Resistance	U_s, R_s	U and R-values for spandrel with slab
Surface Temperature Index[1]	T_i	0 = exterior temperature 1 = interior temperature
Linear Transmittance	ψ	Incremental increase in transmittance per linear length of slab

[1]Assumptions and limitations for surface temperatures identified in ASHRAE 1365-RP

Nominal (1D) vs. Assembly Performance Indicators

Base Assembly – Clear Wall Spandrel Section

Backpan Insulation 1D R-Value (RSI)	R_{1D} ft²·hr·°F / Btu (m² K / W)	R_w ft²·hr·°F / Btu (m² K / W)	U_w Btu/ft² ·hr ·°F (W/m² K)
R-8.4 (1.48)	R-23.5 (4.15)	R-18.5 (3.25)	0.054 (0.31)
R-12.6 (2.22)	R-27.7 (4.89)	R-19.4 (3.41)	0.052 (0.29)
R-16.8 (2.96)	R-31.9 (5.63)	R-20.0 (3.52)	0.050 (0.28)

Slab Linear Transmittance

Backpan Insulation 1D R-Value (RSI)	R_s ft²·hr·°F / Btu (m² K / W)	U_s Btu/ft² ·hr ·°F (W/m² K)	ψ Btu/ft ·hr·°F (W/m K)
R-8.4 (1.48)	R-9.0 (1.58)	0.111 (0.63)	0.456 (0.789)
R-12.6 (2.22)	R-9.3 (1.63)	0.108 (0.61)	0.449 (0.776)
R-16.8 (2.96)	R-9.4 (1.66)	0.106 (0.60)	0.447 (0.774)

Temperature Indices

	R8.4	R12.6	R16.8	
T_{i1}	0.69	0.69	0.69	Min T on sprayfoam, in line with deflection header
T_{i2}	0.93	0.93	0.93	Max T on sprayfoam in stud cavity
T_{i4}	0.68	0.69	0.69	Min T on slab, on ceiling stud track

Detail 1.2.7

Window Wall System – Full Height Insulated Frame at Slab Intersection with Improved Spandrel Bypass & No Interior Stud Cavity Insulation

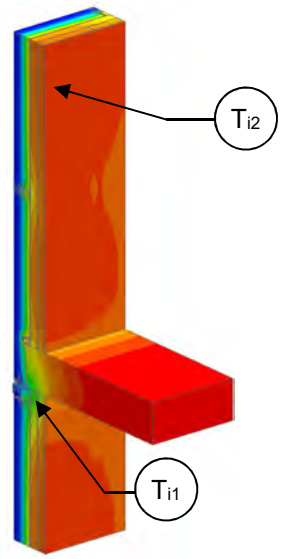

View from Interior

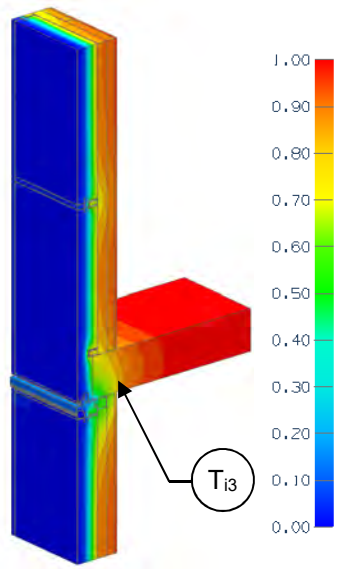

View from Exterior

Thermal Performance Indicators

Assembly 1D (Nominal) R-Value	R_{1D}	R-3.2 (0.55 RSI) + backpan insulation
Transmittance / Resistance without Anomaly	U_w, R_w,	"clear wall" spandrel wall without slab U- and R-value
Transmittance / Resistance	U_s, R_s,	U and R-values for spandrel with slab
Surface Temperature Index[1]	T_i	0 = exterior temperature 1 = interior temperature
Linear Transmittance	ψ	Incremental increase in transmittance per linear length of slab

[1]Assumptions and limitations for surface temperatures identified in ASHRAE 1365-RP. Images are for Scenario A.

Scenario

Scenario	Spandrel And Deflection Header
A	Triple Glazing Break, Improved Bypass, Standard Deflection Header
B	Triple Glazing Break, Improved Bypass, Deflection Header Thermal Break in line with Slab Insulation

Nominal (1D) vs. Assembly Performance Indicators

Base Assembly – Clear Wall Spandrel Section

Backpan Insulation 1D R-Value (RSI)	R_{1D} ft²·hr·°F / Btu (m² K / W)	R_w ft²·hr·°F / Btu (m² K / W)	U_w Btu/ft² ·hr ·°F (W/m² K)
R-12.6 (2.22)	R-15.7 (2.77)	R-8.6 (1.51)	0.117 (0.66)

Slab Linear Transmittance

Scenario	Backpan Insulation 1D R-Value (RSI)	R_s ft²·hr·°F / Btu (m² K / W)	U_s Btu/ft² ·hr ·°F (W/m² K)	ψ Btu/ft ·hr·°F (W/m K)
A	R-12.6 (2.22)	R-6.2 (1.09)	0.161 (0.92)	0.357 (0.617)
B	R-12.6 (2.22)	R-7.8 (1.37)	0.129 (0.73)	0.096 (0.166)

Temperature Indices

	A	B	
T_{i1}	0.58	0.73	Min T in stud cavity, on frame at deflection header
T_{i2}	0.83	0.84	Max T on backpan, at center of backpan
T_{i3}	0.60	0.75	Min T on slab, above deflection header

Detail 1.2.8

Window Wall System – Full Height Insulated Frame at Slab Intersection with Hybridized Clipped Spandrel & No Interior Stud Cavity Insulation

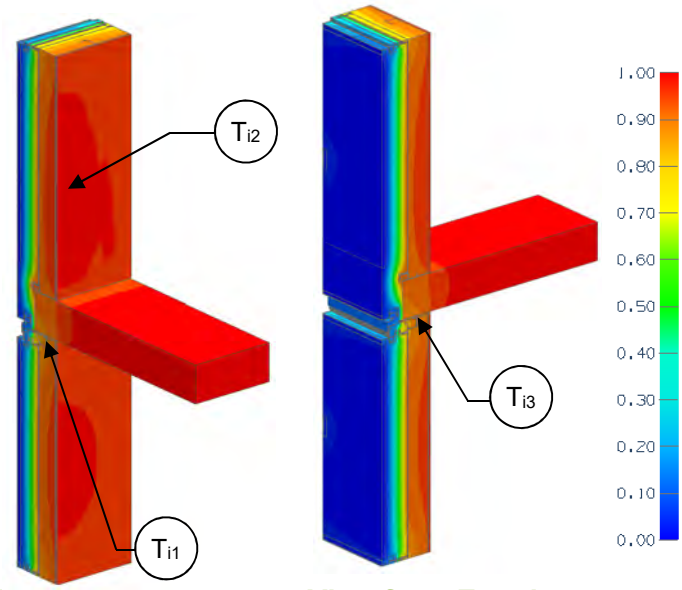

View from Interior View from Exterior

Thermal Performance Indicators

Assembly 1D (Nominal) R-Value	R_{1D}	R-3.2 (0.55 RSI) + backpan insulation
Transmittance / Resistance without Anomaly	U_w, R_w,	"clear wall" spandrel wall without slab U- and R-value
Transmittance / Resistance	U_s, R_s,	U and R-values for spandrel with slab
Surface Temperature Index[1]	T_i	0 = exterior temperature 1 = interior temperature
Linear Transmittance	ψ	Incremental increase in transmittance per linear length of slab

[1]Assumptions and limitations for surface temperatures identified in ASHRAE 1365-RP

Nominal (1D) vs. Assembly Performance Indicators

Base Assembly – Clear Wall Spandrel Section

Backpan Insulation 1D R-Value (RSI)	R_{1D} ft²·hr·°F / Btu (m² K / W)	R_w ft²·hr·°F / Btu (m² K / W)	U_w Btu/ft² ·hr ·°F (W/m² K)
R-23.1 (4.07)	R-26.3 (4.63)	R-12.7 (2.24)	0.079 (0.45)

Slab Linear Transmittance

Backpan Insulation 1D R-Value (RSI)	R_s ft²·hr·°F / Btu (m² K / W)	U_s Btu/ft² ·hr ·°F (W/m² K)	ψ Btu/ft ·hr·°F (W/m K)
R-23.1 (4.07)	R-11.1 (1.96)	0.090 (0.51)	0.089 (0.154)

Temperature Indices

T_{i1}	0.80	Min T in stud cavity, on frame at deflection header
T_{i2}	0.89	Max T on backpan, at center of backpan
T_{i3}	0.81	Min T on slab, above deflection header

Detail 1.2.9

Window Wall System with Upstand Spandrel Section – Intermediate Floor Intersection with Spandrel Bypass and no Interior Stud Cavity Insulation

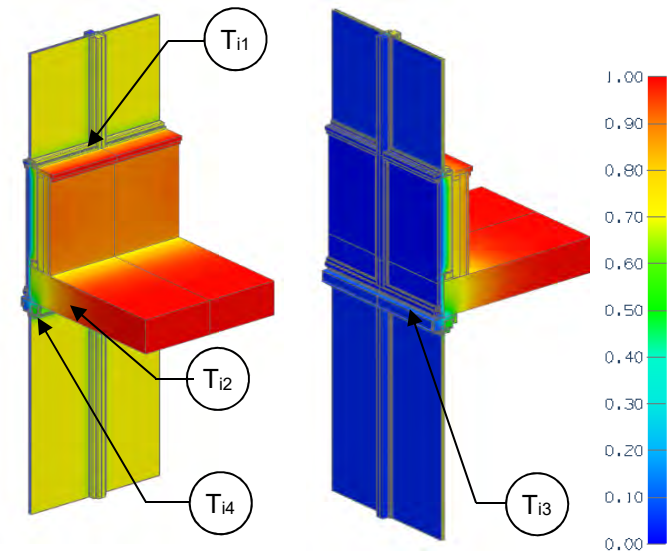

View from Interior

View from Exterior

Thermal Performance Indicators

Assembly 1D (Nominal) R-Value	R_{1D}	R-3.2 (0.56 RSI) + backpan insulation
Transmittance / Resistance without Anomaly	U_w, R_w, U_g,	"clear wall" U- and R-value: w = spandrel wall without slab g = glazing
Transmittance / Resistance	U_s, R_s, U_t, R_t	U and R-values for: s = spandrel with slab t = combined glazing and spandrel with slab
Surface Temperature Index[1]	T_i	0 = exterior temperature 1 = interior temperature
Linear Transmittance	ψ	Incremental increase in transmittance per linear length of slab

[1]Assumptions and limitations for surface temperatures identified in ASHRAE 1365-RP
[2]Spandrel section includes interface with slab and vision glazing

Nominal (1D) vs. Assembly Performance Indicators

Base Assembly – Clear Wall Spandrel Section

Backpan Insulation 1D R-Value (RSI)	R_{1D} ft²·hr·°F / Btu (m² K / W)	R_w ft²·hr·°F / Btu (m² K / W)	U_w Btu/ft² ·hr ·°F (W/m² K)
R-12.6 (2.22)	R-15.7 (2.77)	R-7.8 (1.38)	0.128 (0.73)

Base Assembly Glazing

$U_{centre\ of\ glass}$ Btu/ft² ·hr ·°F (W/m² K)	U_g Btu/ft² ·hr ·°F (W/m² K)
0.242 (1.37)	0.329 (1.87)

Slab Linear Transmittance

Backpan Insulation 1D R-Value (RSI)	R_t ft²·hr·°F / Btu (m² K / W)	U_t Btu/ft² ·hr ·°F (W/m² K)	ψ Btu/ft ·hr ·°F (W/m K)
R-12.6 (2.22)	R-3.0 (0.53)	0.331 (1.88)	0.557 (0.964)

Spandrel Section with Slab[2]

R_s ft²·hr·°F / Btu (m² K / W)	U_s Btu/ft² ·hr ·°F (W/m² K)
R-3.0 (0.52)	0.337 (1.91)

Temperature Indices

T_{i1}	0.63	Min T in stud cavity, on vertical frame at edge of backpan
T_{i2}	0.46	Min T on interior glazing, at corner of vertical mullion and deflection head
T_{i3}	0.51	Min T on slab, at deflection head connection
T_{i4}	0.44	Min T on window frame, head at centre of window

Detail 1.2.10

Window Wall System with Full Height Vision Section – Intermediate Floor Intersection with Spandrel Bypass and no Interior Stud Cavity Insulation

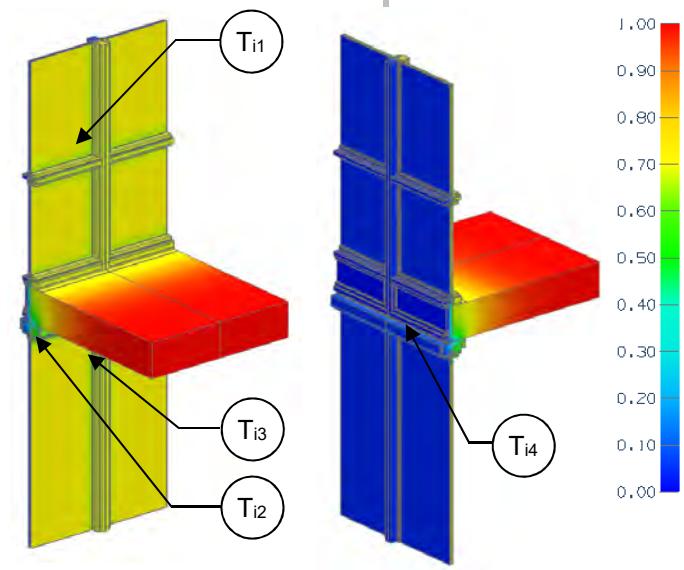

View from Interior

View from Exterior

Thermal Performance Indicators

Assembly 1D (Nominal) R-Value	R_{1D}	R-3.2 (0.56 RSI) + backpan insulation
Transmittance / Resistance without Anomaly	U_w, R_w, U_g,	"clear wall" U- and R-value: w = spandrel wall without slab g = glazing
Transmittance / Resistance	U_s, R_s, U_t, R_t	U and R-values for: s = spandrel with slab t = combined glazing and spandrel with slab
Surface Temperature Index[1]	T_i	0 = exterior temperature 1 = interior temperature
Linear Transmittance	ψ	Incremental increase in transmittance per linear length of slab

[1]Assumptions and limitations for surface temperatures identified in ASHRAE 1365-RP

[2]Bypass section includes interface with slab and vision glazing

Nominal (1D) vs. Assembly Performance Indicators

Base Assembly – Clear Wall Spandrel Section

Backpan Insulation 1D R-Value (RSI)	R_{1D} ft²·hr·°F / Btu (m² K / W)	R_w ft²·hr·°F / Btu (m² K / W)	U_w Btu/ft² ·hr ·°F (W/m² K)
R-12.6 (2.22)	R-15.7 (2.77)	R-6.8 (1.20)	0.147 (0.84)

Base Assembly Glazing

$U_{centre\ of\ glass}$ Btu/ft² ·hr ·°F (W/m² K)	U_g Btu/ft² ·hr ·°F (W/m² K)
0.242 (1.37)	0.340 (1.93)

Slab Linear Transmittance

Backpan Insulation 1D R-Value (RSI)	R_t ft²·hr·°F / Btu (m² K / W)	U_t Btu/ft² ·hr ·°F (W/m² K)	ψ Btu/ft ·hr ·°F (W/m K)
R-12.6 (2.22)	R-2.6 (0.47)	0.379 (2.15)	0.497 (0.860)

Spandrel Section with Slab[2]

R_s ft²·hr·°F / Btu (m² K / W)	U_s Btu/ft² ·hr ·°F (W/m² K)
R-1.3 (0.23)	0.784 (4.45)

Temperature Indices

T_{i1}	0.52	Min T on interior glazing, at corner of vertical mullion and intermediate horizontal mullion
T_{i2}	0.44	Min T on window frame, head at centre of window
T_{i3}	0.46	Min T on interior glazing, at corner of deflection head and vertical mullion
T_{i4}	0.51	Min T on slab, at deflection head connection

Detail 1.3.1

Window Wall System – Un-insulated Concrete Parapet & Roof Intersection

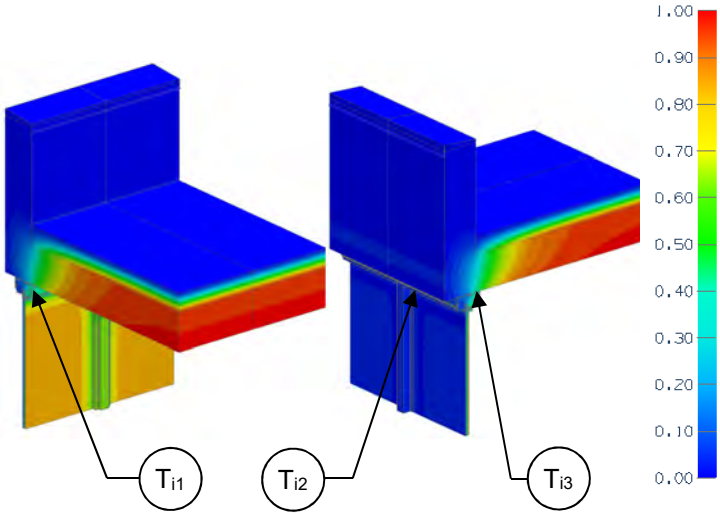

View from Interior View from Exterior

Thermal Performance Indicators

Transmittance / Resistance without Anomaly	U_r, R_r U_g,	"clear field" U- and R-value, r = roof g = glazing
Transmittance / Resistance	U, R	U- and R-values for overall assembly
Surface Temperature Index[1]	T_i	0 = exterior temperature 1 = interior temperature
Linear Transmittance	ψ	Incremental increase in transmittance per linear length of parapet

[1]Assumptions and limitations for surface temperatures identified in ASHRAE 1365-RP

Nominal (1D) vs. Assembly Performance Indicators

Base Assembly – Roof

Roof Insulation 1D R-Value (RSI)	R_r ft²·hr·°F / Btu (m² K / W)	U_r Btu/ft² ·hr ·°F (W/m² K)
R-20 (3.52)	R-21.9(3.86)	0.046 (0.26)

Base Assembly - Glazing

$U_{centre\ of\ glass}$ Btu/ft² ·hr ·°F (W/m² K)	U_g Btu/ft² ·hr ·°F (W/m² K)
0.321 (1.82)	0.408 (2.32)

Parapet Linear Transmittance

R ft²·hr·°F / Btu (m² K / W)	U Btu/ft² ·hr ·°F (W/m² K)	ψ Btu/ft ·hr·°F (W/m K)
R-3.5 (0.61)	0.288 (1.63)	0.567 (0.981)

Temperature Indices

T_{i1}	0.44	Min T on frame, along head of window wall away from centre mullion
T_{i2}	0.49	Min T on interior glazing, at corner of glazing
T_{i3}	0.48	Min T on slab, along head of window wall away from centre mullion

Detail 1.3.2

Window Wall System – Partially Insulated Concrete Parapet & Roof Intersection

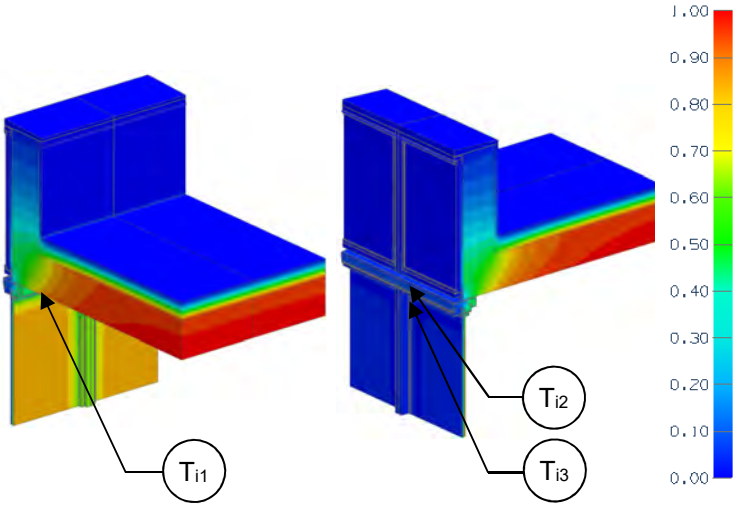

View from Interior **View from Exterior**

Thermal Performance Indicators

Transmittance / Resistance without Anomaly	U_r, R_r U_g,	"clear field" U- and R-value, r = roof g = glazing
Transmittance / Resistance	U, R	U- and R-values for overall assembly
Surface Temperature Index[1]	T_i	0 = exterior temperature 1 = interior temperature
Linear Transmittance	ψ	Incremental increase in transmittance per linear length of parapet

[1]Assumptions and limitations for surface temperatures identified in ASHRAE 1365-RP

Nominal (1D) vs. Assembly Performance Indicators

Base Assembly – Roof

Roof Insulation 1D R-Value (RSI)	R_r ft²·hr·°F / Btu (m² K / W)	U_r Btu/ft² ·hr ·°F (W/m² K)
R-20 (3.52)	R-21.9(3.86)	0.046 (0.26)

Base Assembly - Glazing

$U_{centre\ of\ glass}$ Btu/ft² ·hr ·°F (W/m² K)	U_g Btu/ft² ·hr ·°F (W/m² K)
0.321 (1.82)	0.408 (2.32)

Glazing-Spandrel Linear Transmittance

Spandrel Insulation 1D R-Value (RSI)	R ft²·hr·°F / Btu (m² K / W)	U Btu/ft² ·hr ·°F (W/m² K)	ψ Btu/ft ·hr ·°F (W/m K)
R-4.2 (0.74)	R-3.5 (0.61)	0.289 (1.64)	0.576 (0.996)
R-8.4 (1.48)	R-3.5 (0.61)	0.287 (1.63)	0.563 (0.975)

Temperature Indices

	R4.2	R8.4	
T_{i1}	0.47	0.47	Min T on frame, along head at edge of glazing
T_{i2}	0.49	0.50	Min T on glazing, at corner of glazing
T_{i3}	0.51	0.52	Min T on slab, along head of window wall close to centre mullion

Detail 1.4.1

Window Wall System – Inside Corner with Spandrel to Vision Transition & No Interior Stud Cavity Insulation

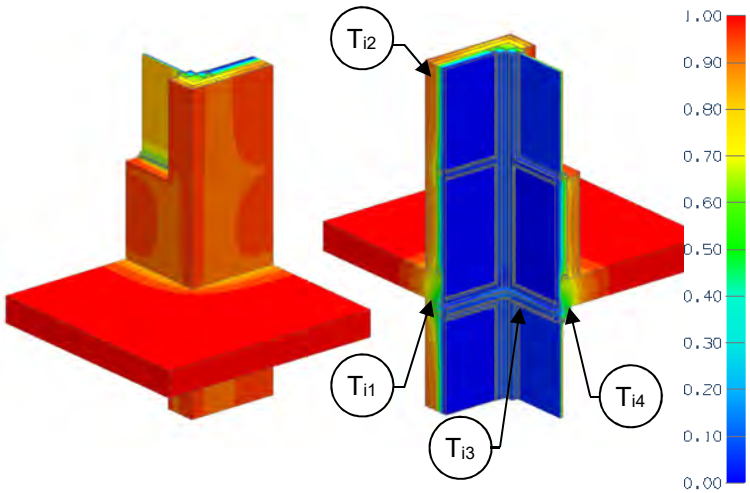

View from Interior View from Exterior

Thermal Performance Indicators

Assembly 1D (Nominal) R-Value	R_{1D}	Spandrel Wall, R-3.2 (0.56 RSI) + backpan insulation
Transmittance / Resistance without Anomaly	U_w, R_w, U_g,	"clear wall" U- and R-value, w = spandrel wall without slab g = glazing
Transmittance / Resistance without Anomaly	U_s, R_s, U_t, R_t	U and R-values for s = spandrel with slab t = combined glazing, spandrel with slab and corner
Surface Temperature Index[1]	T_i	0 = exterior temperature 1 = interior temperature
Linear Transmittance	ψ_s, ψ_c	Incremental increase in transmittance per linear length of s = slab c = corner transition

[1]Assumptions and limitations for surface temperatures identified in ASHRAE 1365-RP

Nominal (1D) vs. Assembly Performance Indicators

Base Assembly – Full Spandrel Wall Clear Wall

Backpan Insulation 1D R-Value (RSI)	R_{1D} ft²·hr·°F / Btu (m² K / W)	R_w ft²·hr·°F / Btu (m² K / W)	U_w Btu/ft² ·hr ·°F (W/m² K)
R-8.4 (1.48)	R-11.6 (2.04)	R-6.8 (1.20)	0.147 (0.84)
R-12.6 (2.22)	R-15.8 (2.78)	R-7.6 (1.34)	0.132 (0.75)
R-16.8 (2.96)	R-20.0 (3.52)	R-8.2 (1.44)	0.122 (0.69)

Base Assembly - Glazing

$U_{centre\ of\ glass}$ Btu/ft² ·hr ·°F (W/m² K)	U_g Btu/ft² ·hr ·°F (W/m² K)
0.321 (1.82)	0.408 (2.32)

Full Spandrel Wall Slab Linear Transmittance

Backpan Insulation 1D R-Value (RSI)	R_s ft²·hr·°F / Btu (m² K / W)	U_s Btu/ft² ·hr ·°F (W/m² K)	ψ_s Btu/ft ·hr·°F (W/m K)
R-8.4 (1.48)	R-5.2 (0.91)	0.193 (1.10)	0.366 (0.634)
R-12.6 (2.22)	R-5.6 (0.98)	0.179 (1.02)	0.379 (0.655)
R-16.8 (2.96)	R-5.8 (1.03)	0.171 (0.97)	0.390 (0.675)

Corner Linear Transmittance

R_t ft²·hr·°F / Btu (m² K / W)	U_t Btu/ft² ·hr ·°F (W/m² K)	ψ_c Btu/ft ·hr·°F (W/m K)
R-2.9 (0.50)	0.350 (1.99)	0.244 (0.421)
R-2.9 (0.52)	0.341 (1.94)	0.245 (0.424)
R-3.0 (0.52)	0.336 (1.91)	0.247 (0.427)

Temperature Indices

	R8.4	R12.6	R16.8	
T_{i1}	0.51	0.53	0.53	Min T in stud cavity, at deflection header away from corner
T_{i2}	0.78	0.82	0.83	Max T on backpan, at center of backpan away from slab and glazing
T_{i3}	0.52	0.52	0.52	Min T on interior glazing, at corner of deflection header
T_{i4}	0.54	0.55	0.55	Min T on slab, at deflection header, in line with vertical frame

Detail 1.4.2

Window Wall System – Inside Corner with Spandrel to Vision Transition & Interior Sprayfoam Insulation

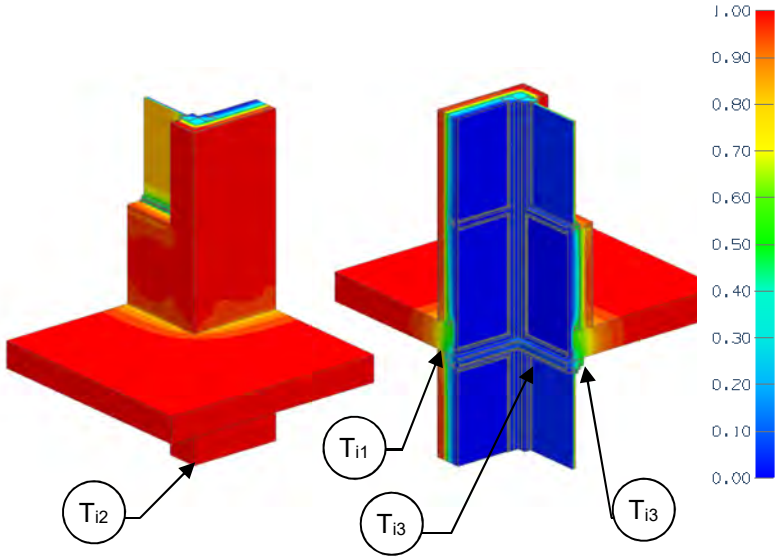

View from Interior **View from Exterior**

Thermal Performance Indicators

Assembly 1D (Nominal) R-Value	R_{1D}	Spandrel Wall, R-15.1 (2.67 RSI) + backpan insulation
Transmittance / Resistance without Anomaly	U_w, R_w U_g,	"clear wall" U- and R-value, w = spandrel wall without slab g = glazing
Transmittance / Resistance without Anomaly	U_s R_s, U_t R_t	U and R-values for s = spandrel with slab t = combined glazing, spandrel with slab and corner
Surface Temperature Index[1]	T_i	0 = exterior temperature 1 = interior temperature
Linear Transmittance	ψ_s, ψ_c	Incremental increase in transmittance per linear length of s = slab c = corner transition

[1]Assumptions and limitations for surface temperatures identified in ASHRAE 1365-RP

Nominal (1D) vs. Assembly Performance Indicators

Base Assembly – Full Spandrel Wall Clear Wall

Backpan Insulation 1D R-Value (RSI)	R_{1D} ft²·hr·°F / Btu (m² K / W)	R_w ft²·hr·°F / Btu (m² K / W)	U_w Btu/ft² ·hr ·°F (W/m² K)
R-8.4 (1.48)	R-23.5 (4.15)	R-18.5 (3.25)	0.054 (0.31)
R-12.6 (2.22)	R-27.7 (4.89)	R-19.4 (3.41)	0.052 (0.29)
R-16.8 (2.96)	R-31.9 (5.63)	R-20.0 (3.52)	0.050 (0.28)

Base Assembly - Glazing

$U_{centre\ of\ glass}$ Btu/ft² ·hr ·°F (W/m² K)	U_g Btu/ft² ·hr ·°F (W/m² K)
0.321 (1.82)	0.408 (2.32)

Full Spandrel Wall Slab Linear Transmittance

Backpan Insulation 1D R-Value (RSI)	R_s ft²·hr·°F / Btu (m² K / W)	U_s Btu/ft² ·hr ·°F (W/m² K)	ψ_s Btu/ft ·hr·°F (W/m K)
R-8.4 (1.48)	R-9.0 (1.58)	0.111 (0.63)	0.456 (0.789)
R-12.6 (2.22)	R-9.3 (1.63)	0.108 (0.61)	0.449 (0.776)
R-16.8 (2.96)	R-9.4 (1.66)	0.106 (0.60)	0.447 (0.774)

Corner Linear Transmittance

R_t ft²·hr·°F / Btu (m² K / W)	U_t Btu/ft² ·hr ·°F (W/m² K)	ψ_c Btu/ft ·hr·°F (W/m K)
R-3.7 (0.65)	0.270 (1.53)	0.114 (0.197)
R-3.8 (0.66)	0.266 (1.51)	0.117 (0.203)
R-3.8 (0.67)	0.265 (1.50)	0.119 (0.206)

Temperature Indices

	R8.4	R12.6	R16.8	
T_{i1}	0.67	0.68	0.68	Min T in stud cavity, on sprayfoam in line with deflection header
T_{i2}	0.97	0.97	0.98	Max T on sprayfoam, at corner away from slab
T_{i3}	0.44	0.45	0.45	Min T on interior glazing, at corner of deflection header
T_{i4}	0.57	0.57	0.57	Min T on slab, at deflection header, in line with vertical frame

Detail 1.5.1

Window Wall System with Insulated Spandrel Panel – Uninsulated Interior Concrete Wall and Intermediate Floor Intersection

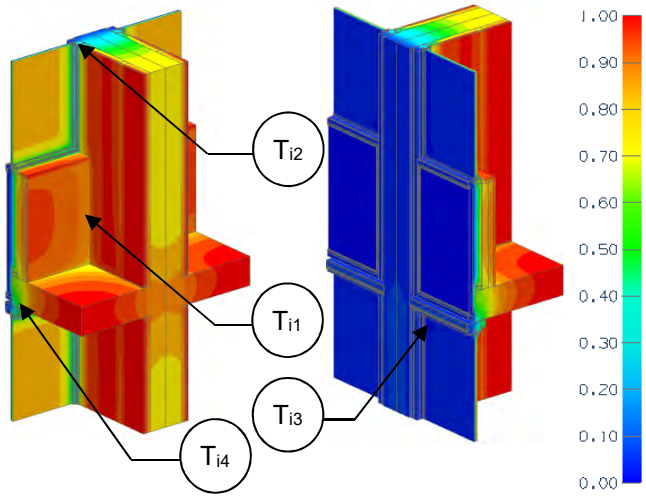

View from Interior View from Exterior

Thermal Performance Indicators

Assembly 1D (Nominal) R-Value	R_{1D}	R-3.2 (0.55 RSI) + backpan insulation
Transmittance / Resistance without Anomaly	U_w, R_w, U_g	"clear wall" U- and R-value, w = spandrel wall g = glazing
Transmittance / Resistance	U_s, R_s, U_t, R_t	U and R-values for s = spandrel with slab t = combined glazing and spandrel with vertical concrete wall and horizontal slab
Surface Temperature Index[1]	T_i	0 = exterior temperature 1 = interior temperature
Linear Transmittance	ψ_s, ψ_v	Incremental increase in transmittance per linear length of s = slab v = vertical wall projection

[1]Assumptions and limitations for surface temperatures identified in ASHRAE 1365-RP

Nominal (1D) vs. Assembly Performance Indicators

Base Assembly - Spandrel Section Clear Wall

Backpan Insulation 1D R-Value (RSI)	R_{1D} ft²·hr·°F / Btu (m² K / W)	R_w ft²·hr·°F / Btu (m² K / W)	U_w Btu/ft² ·hr ·°F (W/m² K)
R-8.4 (1.48)	R-11.6 (2.03)	R-6.3 (1.11)	0.158 (0.90)
R-16.8 (2.96)	R-20.0 (3.52)	R-7.6 (1.33)	0.132 (0.75)

Base Assembly - Glazing

$U_{centre\ of\ glass}$ Btu/ft² ·hr ·°F (W/m² K)	U_g Btu/ft² ·hr ·°F (W/m² K)
0.321 (1.82)	0.408 (2.32)

Horizontal Slab Linear Transmittance

Backpan Insulation 1D R-Value (RSI)	R_s ft²·hr·°F / Btu (m² K / W)	U_s Btu/ft² ·hr ·°F (W/m² K)	ψ_s Btu/ft ·hr·°F (W/m K)
R-8.4 (1.48)	R-3.6 (0.64)	0.275 (1.56)	0.350 (0.606)
R-16.8 (2.96)	R-3.9 (0.70)	0.253 (1.44)	0.363 (0.628)

Vertical Wall Linear Transmittance

R_t ft²·hr·°F / Btu (m² K / W)	U_t Btu/ft² ·hr ·°F (W/m² K)	ψ_v Btu/ft ·hr·°F (W/m K)
R-2.4 (0.42)	0.419 (2.38)	0.386 (0.67)
R-2.5 (0.43)	0.405 (2.30)	0.476 (0.82)

Temperature Indices

	R8.4	R16.8	
T_{i1}	0.29	0.31	Min T in stud cavity, on curtain wall frame, mid height of spandrel
T_{i2}	0.37	0.38	Min T on exposed window frame, away from sill
T_{i3}	0.52	0.52	Min T on interior glazing, at corner of deflection header
T_{i4}	0.54	0.55	Min T on slab, at deflection header

Detail 1.5.2

Window Wall System with Insulated Spandrel Panel – Insulated Interior Concrete Wall and Intermediate Floor Intersection

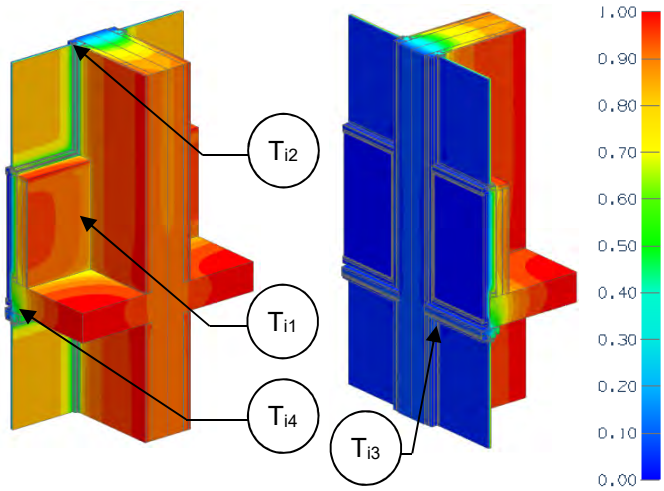

View from Interior View from Exterior

Thermal Performance Indicators

Assembly 1D (Nominal) R-Value	R_{1D}	R-3.2 (0.55 RSI) + backpan insulation
Transmittance / Resistance without Anomaly	U_w, R_w, U_g	"clear wall" U- and R-value, w = spandrel wall g = glazing
Transmittance / Resistance	U_s, R_s, U_t, R_t	U and R-values for s = spandrel with slab t = combined glazing and spandrel with vertical concrete wall and horizontal slab
Surface Temperature Index[1]	T_i	0 = exterior temperature 1 = interior temperature
Linear Transmittance	ψ_s, ψ_v	Incremental increase in transmittance per linear length of s = slab v = vertical wall projection

[1]Assumptions and limitations for surface temperatures identified in ASHRAE 1365-RP

Nominal (1D) vs. Assembly Performance Indicators

Base Assembly - Spandrel Section Clear Wall

Backpan Insulation 1D R-Value (RSI)	R_{1D} ft²·hr·°F / Btu (m² K / W)	R_w ft²·hr·°F / Btu (m² K / W)	U_w Btu/ft² ·hr ·°F (W/m² K)
R-8.4 (1.48)	R-11.6 (2.03)	R-6.3 (1.11)	0.158 (0.90)
R-16.8 (2.96)	R-19.9 (3.51)	R-7.6 (1.33)	0.132 (0.75)

Base Assembly - Glazing

$U_{centre\ of\ glass}$ Btu/ft² ·hr ·°F (W/m² K)	U_g Btu/ft² ·hr ·°F (W/m² K)
0.321 (1.82)	0.408 (2.32)

Intersection Linear Transmittance

Backpan Insulation 1D R-Value (RSI)	R_s ft²·hr·°F / Btu (m² K / W)	U_s Btu/ft² ·hr ·°F (W/m² K)	ψ Btu/ft ·hr·°F (W/m K)
R-8.4 (1.48)	R-3.6 (0.64)	0.275 (1.56)	0.350 (0.606)
R-16.8 (2.96)	R-3.9 (0.70)	0.253 (1.44)	0.363 (0.628)

Vertical Wall Linear Transmittance

R_t ft²·hr·°F / Btu (m² K / W)	U_t Btu/ft² ·hr ·°F (W/m² K)	ψ_v Btu/ft ·hr·°F (W/m K)
R-2.3 (0.40)	0.280 (1.59)	0.575 (1.00)
R-2.3 (0.41)	0.214 (1.21)	0.662 (1.15)

Temperature Indices

	R8.4	R16.8	
T_{i1}	0.32	0.35	Min T in stud cavity, on curtain wall frame, mid height of spandrel
T_{i2}	0.41	0.41	Min T on exposed window frame, away from sill
T_{i3}	0.52	0.52	Min T on interior glazing, at corner of deflection header
T_{i4}	0.54	0.55	Min T on slab, at deflection header

2.0 Conventional Curtain Wall

Detail 2.1.1 ..... **B.2.1**

Conventional Curtain Wall System with Spandrel Panel and 3 5/8” x 1 5/8” Steel Studs (16” o.c.) – Slab Intersection & No Interior Insulation in Stud Cavity

Detail 2.1.2 ..... **B.2.2**

Conventional Curtain Wall System with Insulated Spandrel Panel and 3 5/8″ x 1 5/8″ Steel Stud (16″ o.c) – Intermediate Floor Intersection & Spray Foam Insulation in Stud Cavity

Detail 2.1.3 ..... **B.2.3**

Conventional Curtain Wall System with Vertical and Horizontal Pressure Plates and 5’ x 5’ Spandrel Section – Insulated Metal Backpan and Intermediate Floor Intersection

Detail 2.1.4 ..... **B.2.4**

Conventional Curtain Wall System with Vertical and Horizontal Pressure Plates and 5’ x 5’ Spandrel Section – AIM Applications and Intermediate Floor Intersection

Detail 2.1.5 ..... **B.2.5**

Conventional Curtain Wall System with Vertical and Horizontal Pressure Plates and 5’ x 5’ Spandrel Section – Insulated Metal Backpan and Intermediate Floor Intersection

Detail 2.1.6 ..... **B.2.6**

Conventional Curtain Wall System with 5’ x 5’ Spandrel Section – Alternative Glazing Methods and Intermediate Floor Intersection

Detail 2.1.7 ..... **B.2.7**

Conventional Curtain Wall System with Vertical and Horizontal Pressure Plates and 5’ x 5’ Spandrel Section – Insulated Backpan and Improved Glazing at Intermediate Floor Intersection

Detail 2.1.8 ..... **B.2.8**

Conventional Curtain Wall System with Vertical and Horizontal Pressure Plates and 5’ x 5’ Spandrel Section – AIM Applications and Improved Glazing at Intermediate Floor Intersection

Detail 2.1.9 ..... **B.2.9**

Conventional Curtain Wall System with Vertical and Horizontal Pressure Plates – Intermediate Mullion and 5’ x 5’ Spandrel Section – Insulated Backpan and Intermediate Floor Intersection

Detail 2.1.10 ..... **B.2.10**

Conventional Curtain Wall System with Vertical and Horizontal Pressure Plates – Intermediate Mullion and 5’ x 5’ Spandrel Section – AIM Applications and Intermediate Floor Intersection

Detail 2.1.11 ..... **B.2.11**

Conventional Curtain Wall System with Insulated Spandrel Panel and 3 5/8″ x 1 5/8″ Steel Stud (16″ o.c) – Slab Intersection & Spray Foam Insulation in Stud Cavity with Thermal Break Under Stud Cavity and at Anchors

Detail 2.1.12 ..... B.2.12

Conventional Curtain Wall System with Insulated Spandrel Panel and 3 5/8” x 1 5/8” Steel Studs (16” o.c.) – Slab Intersection & No Metal Back Pan

Detail 2.1.13 ..... B.2.13

Conventional Curtain Wall System with Insulated Spandrel Panel and 3 5/8” x 1 5/8” Steel Studs (16” o.c.) – Slab Intersection & Metal Back Pan Connected to Side of Frame

Detail 2.1.14 ..... B.2.14

Conventional Curtain Wall System with Vertical and Horizontal Pressure Plates and 5’ x 5’ Spandrel Section – Owens Corning Thermafiber Impasse System and Intermediate Floor Intersection

Detail 2.2.1 ..... B.2.15

Conventional Curtain Wall System with Insulated Spandrel Panel & 3 5/8” x 1 5/8” Steel Stud (16” o.c.) – Uninsulated Concrete with Spandrel & Roof Intersection

Detail 2.2.2 ..... B.2.16

Conventional Curtain Wall System –Insulated Spandrel & Roof Intersection

Detail 2.2.3 ..... B.2.17

Conventional Curtain Wall System with Insulated Spandrel Panel and 3 5/8″ x 1 5/8″ Steel Stud (16″ o.c.) – Concrete Parapet Roof Intersection & Spray Foam Insulation in Stud Cavity

Detail 2.2.4 ..... B.2.18

Conventional Curtain Wall System with Insulated Spandrel Panel & 3 5/8” x 1 5/8” Steel Stud (16” o.c.) – Insulated Concrete with Spandrel & Roof Intersection

Detail 2.3.1 ..... B.2.19

Conventional Curtain Wall System with Insulated Spandrel Panel– Un-insulated Jamb Intersection with Vision Section

Detail 2.3.2 ..... B.2.20

Conventional Curtain Wall System with Insulated Spandrel Panel– Rigid Insulated Jamb Intersection with Vision Section

Detail 2.3.3 ..... B.2.21

Conventional Curtain Wall System with Insulated Spandrel Panel –Aerogel Insulated Jamb Intersection with Vision Section

Detail 2.4.1 ..... B.2.22

Conventional Curtain Wall with Insulated Spandrel Panel & 3 5/8” x 1 5/8” Steel Stud (16” o.c.) - Beam Intersection Connected to Concrete Slab

Detail 2.4.2 ..... B.2.23

Conventional Curtain Wall with Insulated Spandrel Panel & 5 5/8” x 1 5/8” Steel Stud (16” o.c.)- Beam Intersection Connected to Steel Beam

Detail 2.4.3 ..... B.2.24

Conventional Curtain Wall with Insulated Spandrel Panel & 3 5/8” x 1 5/8” Steel Stud (16” o.c.) - Canopy Beam & Gutter Intersection

Detail 2.4.4 ..... B.2.25

Conventional Curtain Wall with Insulated Spandrel Panel & 5 5/8” x 1 5/8” Steel Stud (16” o.c.) - Beam Intersection Connected to Steel Beam with Additional Mullions

Detail 2.5.1 ..... B.2.26

Conventional Curtain Wall System – At-Grade Slab Transition

Detail 2.1.1

Conventional Curtain Wall System with Spandrel Panel and 3 5/8" x 1 5/8" Steel Studs (16" o.c.) – Slab Intersection & No Interior Insulation in Stud Cavity

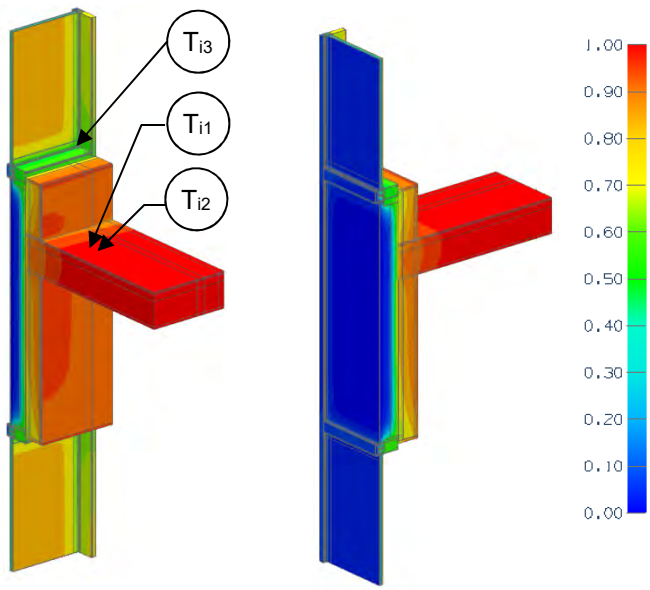

View from Interior View from Exterior

Thermal Performance Indicators

Transmittance / Resistance[1]	U_s, R_s	Spandrel Section U-Value and "Effective" R-value (including slab)
	U_g, R_g	Glazing U-value and "Effective" R-value
	U_t, R_t	Total Assembly U-value and "Effective" R-value
Surface Temperature Index[2]	T_i	0 = exterior temperature 1 = interior temperature

[1] U_t based on a window to wall ratio of 50%, but U_s is valid for all spandrel dimension

[2] Assumptions and limitations for surface temperatures identified in ASHRAE 1365-RP

Nominal (1D) vs. Assembly Performance Indicators

Insulation R-Value (RSI)	R_s ft²·hr·°F / Btu (m² K / W)	U_s Btu/ft² ·hr ·°F (W/m² K)	R_g ft²·hr·°F / Btu (m² K / W)	U_g Btu/ft² ·hr ·°F (W/m² K)	R_t ft²·hr·°F / Btu (m² K / W)	U_t[1] Btu/ft² ·hr ·°F (W/m² K)
R-8.4 (1.48)	R-3.6 (0.64)	0.274 (1.56)	R-2.2 (0.39)	0.452 (2.57)	R-2.7 (0.48)	0.366 (2.08)
R-16.8 (2.96)	R-4.8 (0.85)	0.207 (1.17)	R-2.2 (0.39)	0.452 (2.57)	R-3.0 (0.53)	0.334 (1.89)

Temperature Indices

	R8.4	R16.8	
T_{i1}	0.49	0.61	Min T on Back Pan, at the mullion, by the slab
T_{i2}	0.42	0.53	Min T on interior frame, at vertical mullion behind slab
T_{i3}	0.47	0.50	Min T on interior window, at bottom corner

Detail 2.1.2

Conventional Curtain Wall System with Insulated Spandrel Panel and 3 5/8″ x 1 5/8″ Steel Stud (16″ o.c) – Intermediate Floor Intersection & Spray Foam Insulation in Stud Cavity

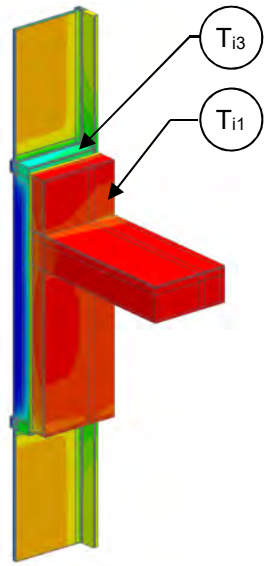

View from Interior

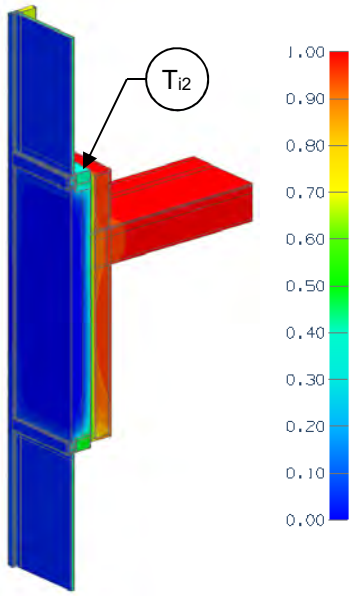

View from Exterior

Thermal Performance Indicators

Transmittance / Resistance[1]	U_s, R_s	Spandrel Section U-Value and "Effective" R-value (including slab)
	U_g, R_g	Glazing U-value and "Effective" R-value
	U_t, R_t	Total Assembly U-value and "Effective" R-value
Surface Temperature Index[1]	T_i	0 = exterior temperature 1 = interior temperature

[1]Assumptions and limitations for surface temperatures identified in ASHRAE 1365-RP

Nominal (1D) vs. Assembly Performance Indicators

Insulation R-Value (RSI)	R_s ft²·hr·°F / Btu (m² K / W)	U_s Btu/ft² ·hr ·°F (W/m² K)	R_g ft²·hr·°F / Btu (m² K / W)	U_g Btu/ft² ·hr ·°F (W/m² K)	R_t ft²·hr·°F / Btu (m² K / W)	U_t Btu/ft² ·hr ·°F (W/m² K)
R-8.4 (1.48)	R-5.4 (0.95)	0.186 (1.05)	R-2.2 (0.39)	0.452 (2.57)	R-3.1 (0.54)	0.323 (1.84)
R-16.8 (2.96)	R-6.7 (1.18)	0.149 (0.85)	R-2.2 (0.39)	0.452 (2.57)	R-3.3 (0.58)	0.306 (1.74)

Temperature Indices

	R8.4	R16.8	
T_{i1}	0.43	0.50	Min T in stud cavity, on Anchor
T_{i2}	0.48	0.49	Min T on interior frame, on sill
T_{i3}	0.44	0.45	Min T on interior window, at bottom corner

Detail 2.1.3

Conventional Curtain Wall System with Vertical and Horizontal Pressure Plates and 5' x 5' Spandrel Section – Insulated Metal Backpan and Intermediate Floor Intersection

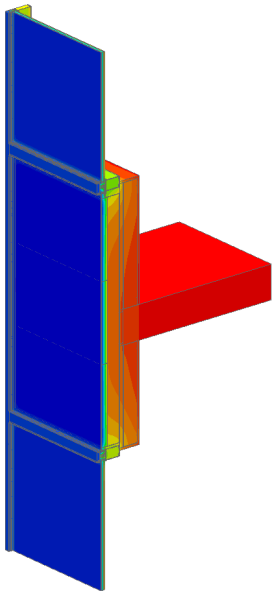

View from Exterior

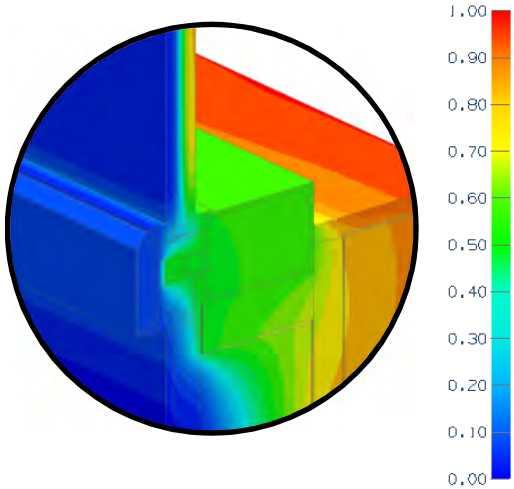

Mullion Detail

Thermal Performance Indicators

Transmittance/ Resistance	U_s, R_s	Spandrel Section U-value and "Effective" R-value (including slab)
	U_g, R_g	Glazing U-value and "Effective" R-value
	U_t, R_t	Total Assembly U-value and "Effective" R-value

[1]U_t based on a window to wall ratio of 50%, but U_s is valid for all spandrel dimensions.

Scenario

Scenario	Vision Glass and Spacer	Insulation Thickness and Application
A0	Double Glazed with Aluminum Spacer	4" (100 mm) Mineral Wool in Backpan

Nominal (1D) vs. Assembly Performance Indicators

Scenario	Insulation R-Value (RSI)	R_s ft²·hr·°F / Btu (m² K / W)	U_s Btu/ft² ·hr ·°F (W/m² K)	R_g ft²·hr·°F / Btu (m² K / W)	U_g Btu/ft² ·hr ·°F (W/m² K)	R_t ft²·hr·°F / Btu (m² K / W)	U_t[1] Btu/ft² ·hr ·°F (W/m² K)
A0	R-16.8 (2.96)	R-4.9 (0.86)	0.204 (1.16)	R-2.4 (0.42)	0.417 (2.37)	R-3.2 (0.57)	0.310 (1.76)

Detail 2.1.4

Conventional Curtain Wall System with Vertical and Horizontal Pressure Plates and 5' x 5' Spandrel Section – AIM Applications and Intermediate Floor Intersection

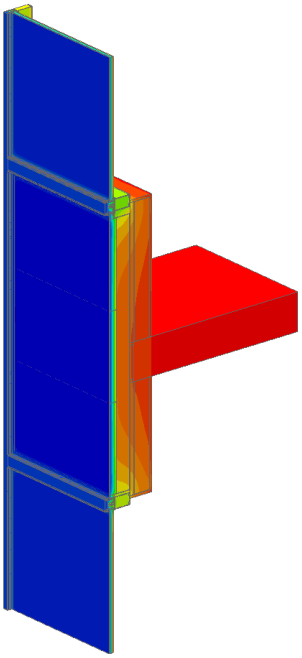

View from Exterior

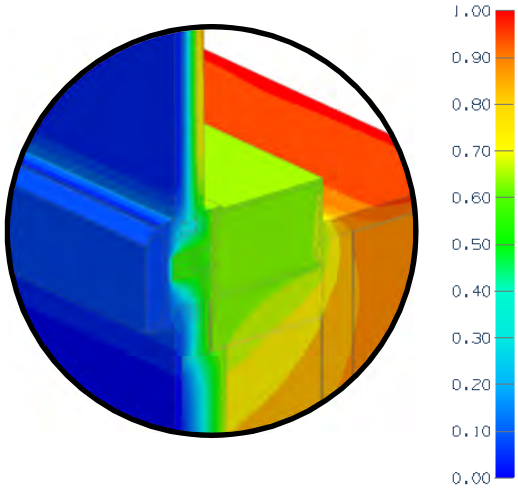

Mullion Detail

Thermal Performance Indicators

Transmittance / Resistance	U_s, R_s	Spandrel Section U-value and "Effective" R-value (including slab)
	U_g, R_g	Glazing U-value and "Effective" R-value
	U_t, R_t	Total Assembly U-value and "Effective" R-value

[1]U_t based on a window to wall ratio of 50%, but U_s is valid for all spandrel dimensions.

AIM = Architectural Insulation Module

Scenarios

Scenario	Vision Glass and Spacer	Insulation Thickness and Application	AIM Spacer/Edge Condition
A1	Double Glazed with Aluminum Spacer	1.5" (38 mm) AIM adhered to Monolithic Glass	None
A2	Double Glazed with Aluminum Spacer	1.5" (38 mm) AIM adhered to Insulating Glass	None
A3	Double Glazed with Aluminum Spacer	0.75" (19 mm) AIM between Glass	Aluminum Spacer
A4	Double Glazed with Aluminum Spacer	1" (25 mm) AIM between Metal Skins	Rigid Insulation

Nominal (1D) vs. Assembly Performance Indicators

Scenario	Insulation R-Value (RSI)	R_s $ft^2 \cdot hr \cdot {}^oF$ / Btu (m^2 K / W)	U_s Btu/ft^2 ·hr ·^oF (W/m^2 K)	R_g $ft^2 \cdot hr \cdot {}^oF$ / Btu (m^2 K / W)	U_g Btu/ft^2 ·hr ·^oF (W/m^2 K)	R_t $ft^2 \cdot hr \cdot {}^oF$ / Btu (m^2 K / W)	U_t[1] Btu/ft^2 ·hr ·^oF (W/m^2 K)
A1	R-58.6 (10.32)	R-6.1 (1.08)	0.163 (0.93)	R-2.3 (0.41)	0.427 (2.42)	R-3.4 (0.60)	0.295 (1.68)
A2	R-58.6 (10.32)	R-6.3 (1.10)	0.160 (0.91)	R-2.4 (0.42)	0.416 (2.36)	R-3.5 (0.61)	0.288 (1.64)
A3	R-29.3 (5.16)	R-6.4 (1.12)	0.157 (0.89)	R-2.4 (0.42)	0.422 (2.40)	R-3.5 (0.61)	0.289 (1.64)
A4	R-39.1 (6.89)	R-7.1 (1.25)	0.141 (0.80)	R-2.4 (0.42)	0.417 (2.37)	R-3.6 (0.63)	0.279 (1.58)

Detail 2.1.5

Conventional Curtain Wall System with Vertical and Horizontal Pressure Plates and 5' x 5' Spandrel Section – Insulated Metal Backpan and Intermediate Floor Intersection

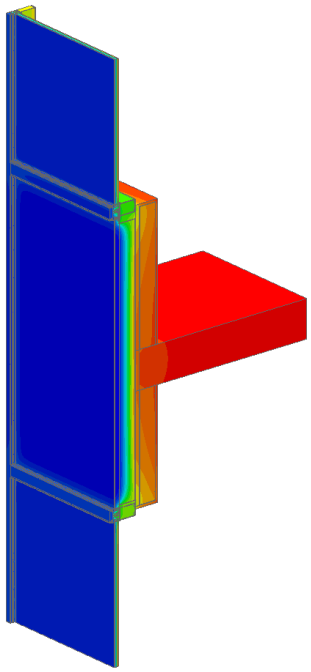

View from Exterior

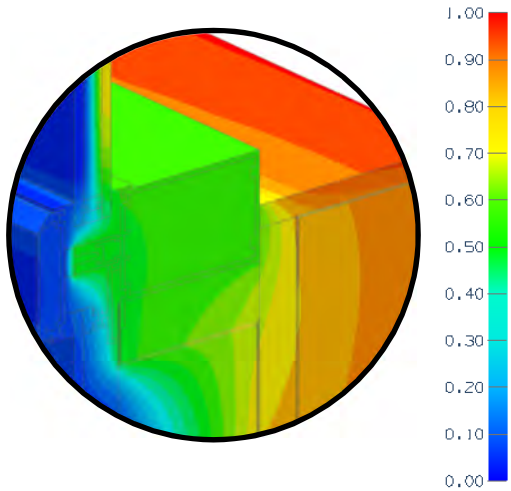

Mullion Detail

Thermal Performance Indicators

Transmittance / Resistance	U_s, R_s,	Spandrel Section U-value and "Effective" R-value (including slab)
	U_g, R_g	Glazing U-value and "Effective" R-value
	U_t, R_t	Total Assembly U-value and "Effective" R-value

[1]U_t based on a window to wall ratio of 50%, but U_s is valid for all spandrel dimensions.

Scenario

Scenario	Vision Glass and Spacer	Insulation Thickness and Application
B0	Double Glazed with Silicone Warm Edge Spacer	4" (100 mm) Mineral Wool in Backpan

Nominal (1D) vs. Assembly Performance Indicators

Scenario	Insulation R-Value (RSI)	R_s ft²·hr·°F / Btu (m² K / W)	U_s Btu/ft² ·hr ·°F (W/m² K)	R_g ft²·hr·°F / Btu (m² K / W)	U_g Btu/ft² ·hr ·°F (W/m² K)	R_t ft²·hr·°F / Btu (m² K / W)	U_t[1] Btu/ft² ·hr ·°F (W/m² K)
B0	R-16.8 (2.96)	4.9 (0.86)	0.204 (1.16)	2.5 (0.43)	0.408 (2.32)	3.3 (0.58)	0.306 (1.74)

Detail 2.1.6

Conventional Curtain Wall System with 5' x 5' Spandrel Section – Alternative Glazing Methods and Intermediate Floor Intersection

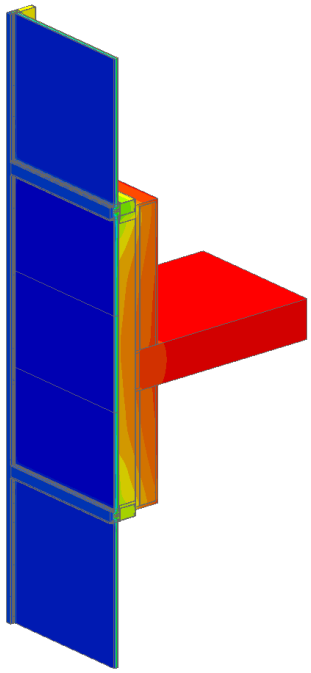

View from Exterior

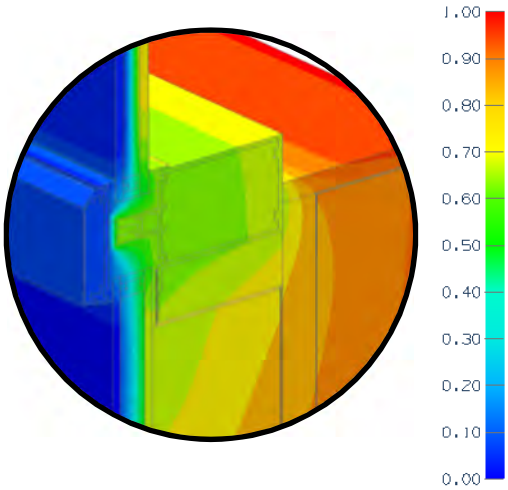

Mullion Detail

Thermal Performance Indicators

Transmittance / Resistance	U_s, R_s	Spandrel Section U-value and "Effective" R-value (including slab)
	U_g, R_g	Glazing U-value and "Effective" R-value
	U_t, R_t	Total Assembly U-value and "Effective" R-value

[1]U_t based on a window to wall ratio of 50%, but U_s is valid for all spandrel dimensions.

AIM = Architectural Insulation Module

Scenarios

Scenario	Glazing Method	Vision Glass and Spacer	Insulation Thickness and Application	AIM Spacer/Edge Condition
B1	Vertical & Horizontal Pressure Plates	Double Glazed with Silicone Warm Edge Spacer	0.75" (19 mm) AIM between Glass	Silicone Warm Edge Spacer
B2	Vertical Structural Silicone & Horizontal Pressure Plates	Double Glazed with Silicone Warm Edge Spacer	0.75" (19 mm) AIM between Glass + 4" (100 mm) Mineral Wool in Backpan	Silicone Warm Edge Spacer

Nominal (1D) vs. Assembly Performance Indicators

Scenario	Insulation R-Value (RSI)	R_s $ft^2 \cdot hr \cdot {}^oF$ / Btu (m^2 K / W)	U_s Btu/ft^2 ·hr ·°F (W/m^2 K)	R_g $ft^2 \cdot hr \cdot {}^oF$ / Btu (m^2 K / W)	U_g Btu/ft^2 ·hr ·°F (W/m^2 K)	R_t $ft^2 \cdot hr \cdot {}^oF$ / Btu (m^2 K / W)	U_t[1] Btu/ft^2 ·hr ·°F (W/m^2 K)
B1	R-29.3 (5.16)	R-6.6 (1.16)	0.151 (0.86)	R-2.4 (0.42)	0.415 (2.36)	R-3.5 (0.62)	0.283 (1.61)
B2	R-46.1 (8.12)	R-8.8 (1.56)	0.113 (0.64)	R-2.6 (0.46)	0.382 (2.17)	R-4.0 (0.71)	0.249 (1.41)

Detail 2.1.7

Conventional Curtain Wall System with Vertical and Horizontal Pressure Plates and 5' x 5' Spandrel Section – Insulated Backpan and Improved Glazing at Intermediate Floor Intersection

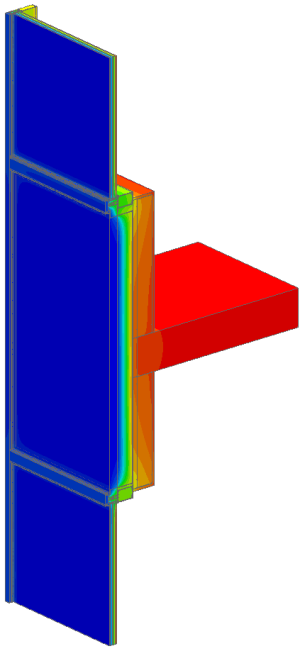

View from Exterior

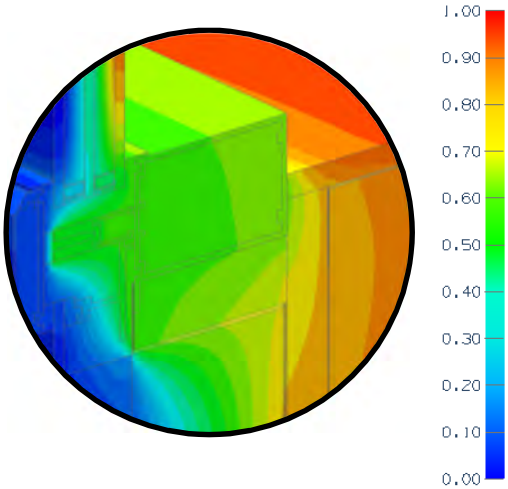

Mullion Detail

Thermal Performance Indicators

Transmittance / Resistance	U_s, R_s	Spandrel Section U-value and "Effective" R-value (including slab)
	U_g, R_g	Glazing U-value and "Effective" R-value
	U_t, R_t	Total Assembly U-value and "Effective" R-value

[1]U_t based on a window to wall ratio of 50%, but U_s is valid for all spandrel dimensions.

Scenario

Scenario	Vision Glass and Spacer	Insulation Thickness and Application
C0	Triple Glazed with Aluminum Spacer	4" (100 mm) Mineral Wool in Backpan

Nominal (1D) vs. Assembly Performance Indicators

Scenario	Insulation R-Value (RSI)	R_s $ft^2 \cdot hr \cdot {}^oF$ / Btu (m^2 K / W)	U_s Btu/ft^2 ·hr ·^oF (W/m^2 K)	R_g $ft^2 \cdot hr \cdot {}^oF$ / Btu (m^2 K / W)	U_g Btu/ft^2 ·hr ·^oF (W/m^2 K)	R_t $ft^2 \cdot hr \cdot {}^oF$ / Btu (m^2 K / W)	U_t[1] Btu/ft^2 ·hr ·^oF (W/m^2 K)
C0	R-16.8 (2.96)	R-5.3 (0.93)	0.189 (1.07)	R-3.5 (0.61)	0.289 (1.64)	R-4.2 (0.74)	0.239 (1.35)

Detail 2.1.8

Conventional Curtain Wall System with Vertical and Horizontal Pressure Plates and 5' x 5' Spandrel Section – AIM Applications and Improved Glazing at Intermediate Floor Intersection

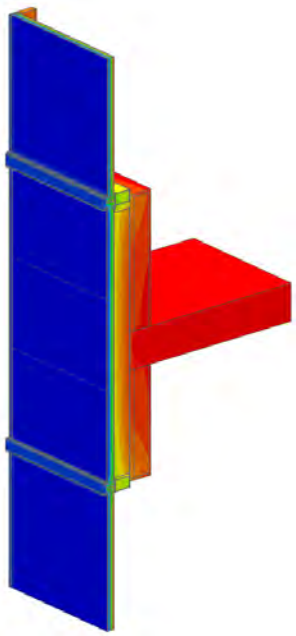

View from Exterior

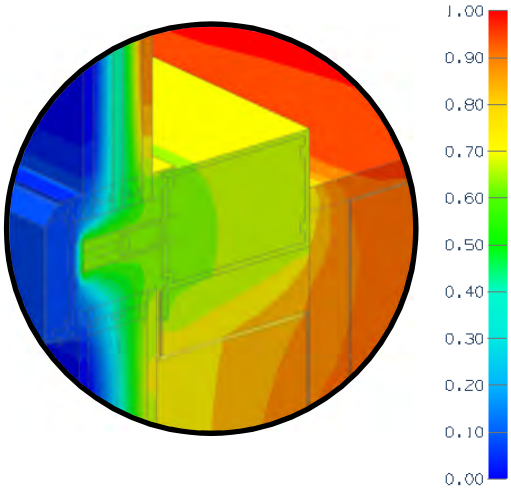

Mullion Detail

Thermal Performance Indicators

Transmittance / Resistance	U_s, R_s	Spandrel Section U-value and "Effective" R-value (including slab)
	U_g, R_g	Glazing U-value and "Effective" R-value
	U_t, R_t	Total Assembly U-value and "Effective" R-value

[1]U_t based on a window to wall ratio of 50%, but U_s is valid for all spandrel dimensions.

AIM = Architectural Insulation Module

Scenarios

Scenario	Vision Glass and Spacer	Insulation Thickness and Application	AIM Spacer/Edge Condition
C1	Triple Glazed with Silicone Warm Edge Spacer	1.5" (38 mm) AIM between Glass + 4" (100 mm) Mineral Wool in Backpan	Silicone Warm Edge Spacer

Nominal (1D) vs. Assembly Performance Indicators

Scenario	Insulation R-Value (RSI)	R_s ft²·hr·°F / Btu (m² K / W)	U_s Btu/ft² ·hr ·°F (W/m² K)	R_g ft²·hr·°F / Btu (m² K / W)	U_g Btu/ft² ·hr ·°F (W/m² K)	R_t ft²·hr·°F / Btu (m² K / W)	U_t[1] Btu/ft² ·hr ·°F (W/m² K)
C1	R-75.4 (13.28)	R-10.5 (1.85)	0.095 (0.54)	R-4.0 (0.70)	0.250 (1.42)	R-5.8 (1.02)	0.173 (0.98)

Detail 2.1.9

Conventional Curtain Wall System with Vertical and Horizontal Pressure Plates – Intermediate Mullion and 5' x 5' Spandrel Section – Insulated Backpan and Intermediate Floor Intersection

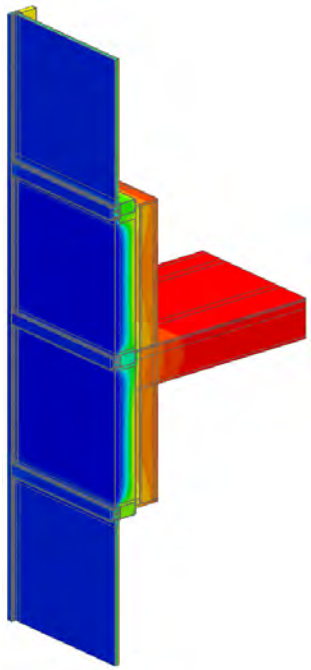

View from Exterior

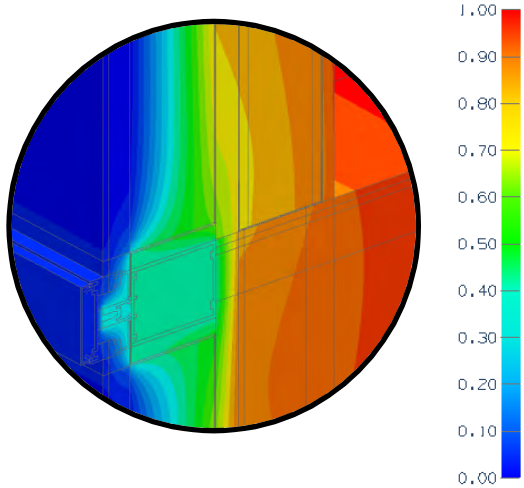

Mullion Detail

Thermal Performance Indicators

Transmittance / Resistance	U_s, R_s	Spandrel Section U-value and "Effective" R-value (including slab)
	U_g, R_g	Glazing U-value and "Effective" R-value
	U_t, R_t	Total Assembly U-value and "Effective" R-value

[1]U_t based on a window to wall ratio of 50%, but U_s is valid for all spandrel dimensions.

Scenario

Scenario	Vision Glass and Spacer	Insulation Thickness and Application
D0	Double Glazed with Aluminum Spacer	4" (100 mm) Mineral Wool in Backpan

Nominal (1D) vs. Assembly Performance Indicators

Scenario	Insulation R-Value (RSI)	R_s ft²·hr·°F / Btu (m² K / W)	U_s Btu/ft² ·hr ·°F (W/m² K)	R_g ft²·hr·°F / Btu (m² K / W)	U_g Btu/ft² ·hr ·°F (W/m² K)	R_t ft²·hr·°F / Btu (m² K / W)	U_t[1] Btu/ft² ·hr ·°F (W/m² K)
D0	R-16.8 (2.96)	R-4.0 (0.70)	0.250 (1.42)	R-2.5 (0.44)	0.404 (2.29)	R-3.1 (0.54)	0.327 (1.86)

Detail 2.1.10

Conventional Curtain Wall System with Vertical and Horizontal Pressure Plates – Intermediate Mullion and 5' x 5' Spandrel Section – AIM Applications and Intermediate Floor Intersection

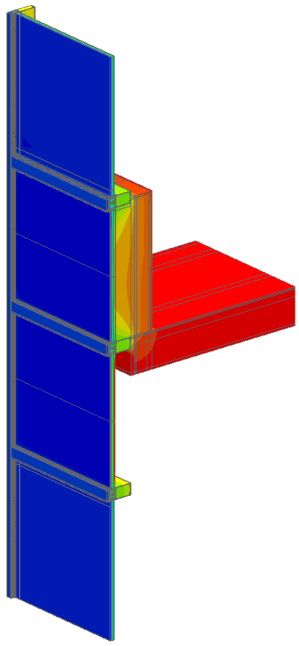

View from Exterior

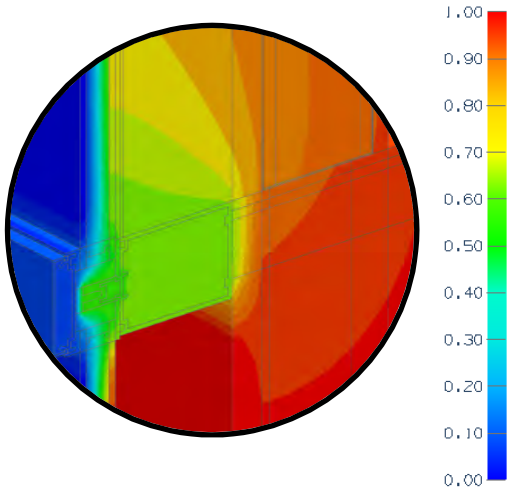

Mullion Detail

Thermal Performance Indicators

Transmittance / Resistance	U_s, R_s	Spandrel Section U-value and "Effective" R-value (including slab)
	U_g, R_g	Glazing U-value and "Effective" R-value
	U_t, R_t	Total Assembly U-value and "Effective" R-value

[1]U_t based on a window to wall ratio of 50%, but U_s is valid for all spandrel dimensions.

AIM = Architectural Insulation Module

Scenarios

Scenario	Curtain Wall Framing	Vision Glass and Spacer	Insulation Thickness and Application	AIM Spacer/Edge Condition
D1	Vertical & Horizontal Pressure Plates	Double Glazed with Silicone Warm Edge Spacer	0.75" (19 mm) AIM between Glass	Silicone Warm Edge Spacer
D2	Vertical Structural Silicone & Horizontal Pressure Plates	Double Glazed with Silicone Warm Edge Spacer	0.75" (19 mm) AIM between Glass	Silicone Warm Edge Spacer
D3	Vertical Structural Silicone & Horizontal Pressure Plates	Double Glazed with Silicone Warm Edge Spacer	1" (25 mm) AIM between Metal Skins	Rigid Insulation
D4	Vertical Structural Silicone & Horizontal Pressure Plates	Triple Glazed with Silicone Warm Edge Spacer	1.5" (38 mm) AIM between Glass	Silicone Warm Edge Spacer

Nominal (1D) vs. Assembly Performance Indicators

Scenario	Insulation R-Value (RSI)	R_s ft²·hr·°F / Btu (m² K / W)	U_s Btu/ft² ·hr ·°F (W/m² K)	R_g ft²·hr·°F / Btu (m² K / W)	U_g Btu/ft² ·hr ·°F (W/m² K)	R_t ft²·hr·°F / Btu (m² K / W)	U_t[1] Btu/ft² ·hr ·°F (W/m² K)
D1	R-29.3 (5.16)	R-4.6 (0.81)	0.217 (1.23)	R-2.4 (0.42)	0.414 (2.35)	R-3.1 (0.55)	0.318 (1.81)
D2	R-29.3 (5.16)	R-5.4 (0.96)	0.184 (1.04)	R-2.6 (0.45)	0.390 (2.22)	R-3.5 (0.61)	0.287 (1.63)
D3	R-39.1 (6.89)	R-6.0 (1.05)	0.167 (0.95)	R-2.6 (0.46)	0.385 (2.19)	R-3.6 (0.64)	0.276 (1.57)
D4	R-58.6 (10.32)	R-6.1 (1.08)	0.163 (0.92)	R-4.0 (0.71)	0.250 (1.42)	R-4.9 (0.85)	0.206 (1.17)

Detail 2.1.11

Conventional Curtain Wall System with Insulated Spandrel Panel and 3 5/8″ x 1 5/8″ Steel Stud (16″ o.c) – Slab Intersection & Spray Foam Insulation in Stud Cavity with Thermal Break Under Stud Cavity and at Anchors

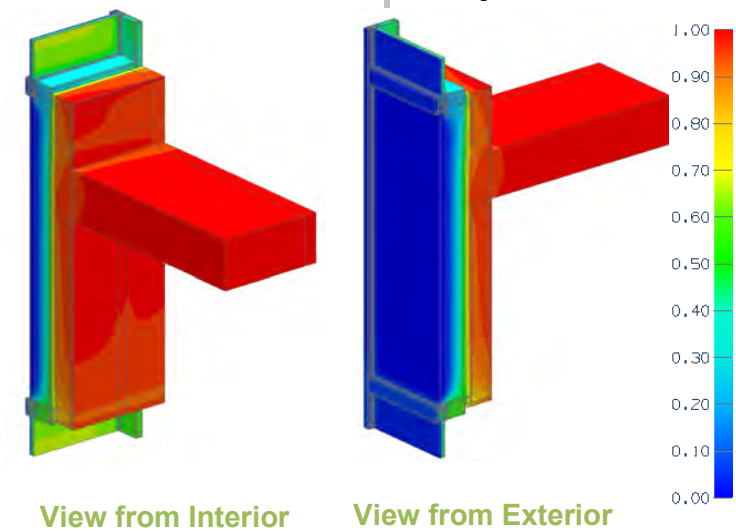

View from Interior View from Exterior

Thermal Performance Indicators

Assembly 1D (Nominal) R-Value	R_{1D}	Nominal thermal resistance of spandrel section + backup wall with sprayfoam
Spandrel Transmittance/ Resistance	U_s, R_s	U- and R-Value for Spandrel section only
Surface Temperature Index	T_i	0 = exterior temperature 1 = interior temperature

[1]For performance of base assembly spandrel without thermal breaks, refer to Detail 2.1.2

Scenario

Scenario	Flashing and Shelf Angle
1	2” Armatherm 500 beneath stud cavity
2	2” Armatherm 500 beneath stud cavity and 3/8” FRR at support angle

Back Pan Insulation vs. Assembly Performance Indicators

Scenario	Backpan Insulation 1D R-Value (RSI)	R_{1D} ft²·hr·°F / Btu (m² K / W)	R_s ft²·hr·°F / Btu (m² K / W)	U_s Btu/ft² ·hr ·°F (W/m² K)
1	R-15 (2.64)	R-29.91 (5.26)	R-9.4 (1.66)	0.106 (0.60)
2	R-15 (2.64)	R-29.91 (5.26)	R-9.6 (1.70)	0.103 (0.59)

Detail 2.1.12

Conventional Curtain Wall System with Insulated Spandrel Panel and 3 5/8" x 1 5/8" Steel Studs (16" o.c.) – Slab Intersection & No Metal Back Pan

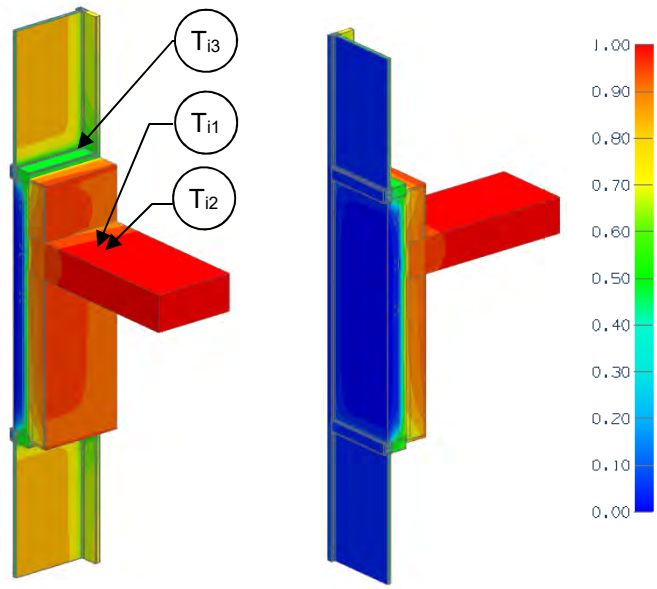

View from Interior **View from Exterior**

Thermal Performance Indicators

Transmittance / Resistance[1]	U_s, R_s	Spandrel Section U-Value and "Effective" R-value (including slab)
	U_g, R_g	Glazing U-value and "Effective" R-value
	U_t, R_t	Total Assembly U-value and "Effective" R-value
Surface Temperature Index[2]	T_i	0 = exterior temperature 1 = interior temperature

[1] U_t based on a window to wall ratio of 50%
[2]Assumptions and limitations for surface temperatures identified in ASHRAE 1365-RP

Scenario

Scenario	Mullion Wrap
A	None
B	Yes

Nominal (1D) vs. Assembly Performance Indicators

Scenario	Insulation R-Value (RSI)	R_s ft²·hr·ºF / Btu (m² K / W)	U_s Btu/ft² ·hr ·ºF (W/m² K)	R_g ft²·hr·ºF / Btu (m² K / W)	U_g Btu/ft² ·hr ·ºF (W/m² K)	R_t ft²·hr·ºF / Btu (m² K / W)	U_t[1] Btu/ft² ·hr ·ºF (W/m² K)
A	R-8.4 (1.48)	R-4.1 (0.73)	0.241 (1.37)	R-2.2 (0.39)	0.452 (2.57)	R-2.9 (0.50)	0.350 (1.99)
B	R-8.4 (1.48)	R-4.8 (0.84)	0.209 (1.18)	R-2.2 (0.39)	0.452 (2.57)	R-3.0 (0.53)	0.335 (1.90)

Temperature Indices

	A	B	
T_{i1}	0.35	0.25	Min T on Back Pan, at the mullion, by the slab
T_{i2}	0.35	0.21	Min T on interior frame, at vertical mullion behind slab
T_{i3}	0.46	0.45	Min T on interior window, at bottom corner

Detail 2.1.13

Conventional Curtain Wall System with Insulated Spandrel Panel and 3 5/8" x 1 5/8" Steel Studs (16" o.c.) – Slab Intersection & Metal Back Pan Connected to Side of Frame

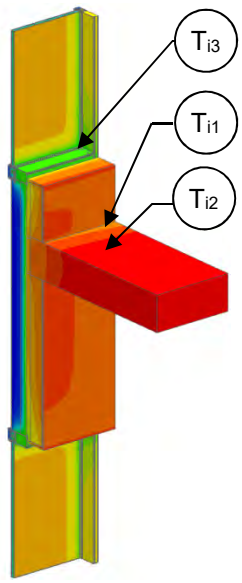

View from Interior

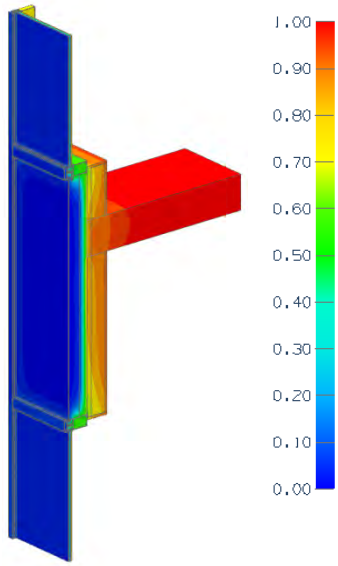

View from Exterior

Thermal Performance Indicators

Transmittance / Resistance[1]	U_s, R_s	Spandrel Section U-Value and "Effective" R-value (including slab)
	U_g, R_g	Glazing U-value and "Effective" R-value
	U_t, R_t	Total Assembly U-value and "Effective" R-value
Surface Temperature Index[2]	T_i	0 = exterior temperature 1 = interior temperature

[1] U_t based on a window to wall ratio of 50%
[2] Assumptions and limitations for surface temperatures identified in ASHRAE 1365-RP

Scenario

Scenario	Location of Metal Back Pan Connected at Frame
A, B	Interior
C	Inset

Nominal (1D) vs. Assembly Performance Indicators

Scenario	Insulation R-Value (RSI)	R_s ft²·hr·°F / Btu (m² K / W)	U_s Btu/ft² ·hr ·°F (W/m² K)	R_g ft²·hr·°F / Btu (m² K / W)	U_g Btu/ft² ·hr ·°F (W/m² K)	R_t ft²·hr·°F / Btu (m² K / W)	U_t[1] Btu/ft² ·hr ·°F (W/m² K)
A	R-8.4 (1.48)	R-4.3 (0.76)	0.231 (1.31)	R-2.2 (0.39)	0.452 (2.57)	R-2.9 (0.51)	0.346 (1.96)
B	R-16.8 (2.96)	R-6.2 (1.10)	0.160 (0.91)	R-2.2 (0.39)	0.452 (2.57)	R-3.2 (0.57)	0.311 (1.77)
C	R-8.4 (1.48)	R-5.5 (0.97)	0.181 (1.03)	R-2.2 (0.39)	0.452 (2.57)	R-3.1 (0.55)	0.322 (1.83)

Temperature Indices

	A	B	C	
T_{i1}	0.52	0.65	0.64	Min T on back pan, at the mullion, by the slab
T_{i2}	0.50	0.64	0.63	Min T on interior frame, at vertical mullion behind slab
T_{i3}	0.48	0.52	0.52	Min T on interior window, at bottom corner

Detail 2.1.14

Conventional Curtain Wall System with Vertical and Horizontal Pressure Plates and 5' x 5' Spandrel Section – Owens Corning Thermafiber Impasse System and Intermediate Floor Intersection

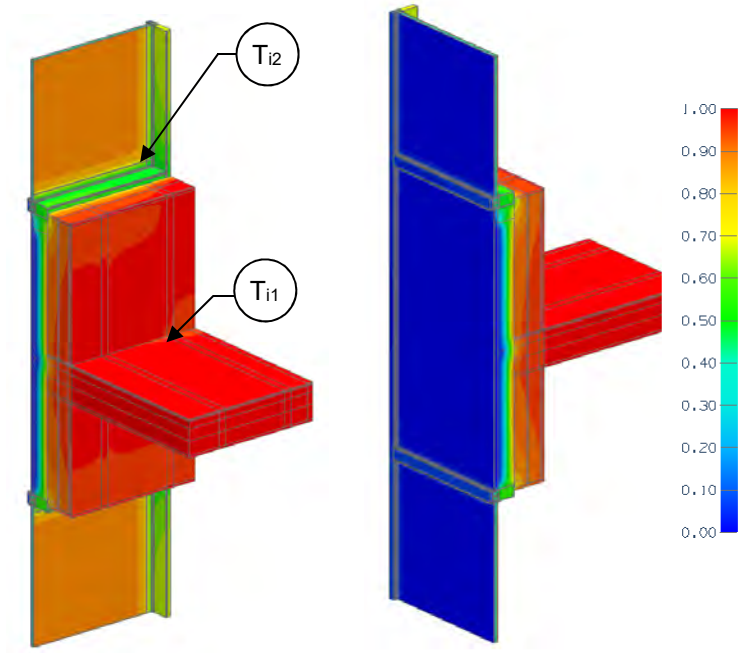

View from Interior View from Exterior

Thermal Performance Indicators

Transmittance / Resistance	U_s, R_s	Spandrel Section U-value and "Effective" R-value (including slab)
	U_g, R_g	Glazing U-value and "Effective" R-value
	U_t, R_t	Total Assembly U-value and "Effective" R-value

[1]U_t based on a window to wall ratio of 50%, but U_s is valid for all spandrel dimensions.

Nominal (1D) vs. Assembly Performance Indicators

Insulation R-Value (RSI)	U_s Btu/ft^2 ·hr ·°F (W/m^2 K)	R_s ft^2·hr·°F / Btu (m^2 K / W)	U_g Btu/ft^2 ·hr ·°F (W/m^2 K)	R_g ft^2·hr·°F / Btu (m^2 K / W)	U_t[1] Btu/ft^2 ·hr ·°F (W/m^2 K)	R_t ft^2·hr·°F / Btu (m^2 K / W)
R-8.4 (1.48)	0.188 (1.07)	R-5.3 (0.94)	0.455 (2.58)	R-2.2 (0.39)	0.321 (1.83)	R-3.1 (0.55)
R-16.8 (2.96)	0.129 (0.73)	R-7.8 (1.37)	0.455 (2.58)	R-2.2 (0.39)	0.292 (1.66)	R-3.4 (0.60)

Temperature Indices

	R8.4	R16.8	
T_{i1}	0.17	0.28	Min T on interior frame, at vertical mullion behind slab
T_{i2}	0.64	0.60	Min T on interior window, at bottom corner

Detail 2.2.1

Conventional Curtain Wall System with Insulated Spandrel Panel & 3 5/8" x 1 5/8" Steel Stud (16" o.c.) – Uninsulated Concrete with Spandrel & Roof Intersection

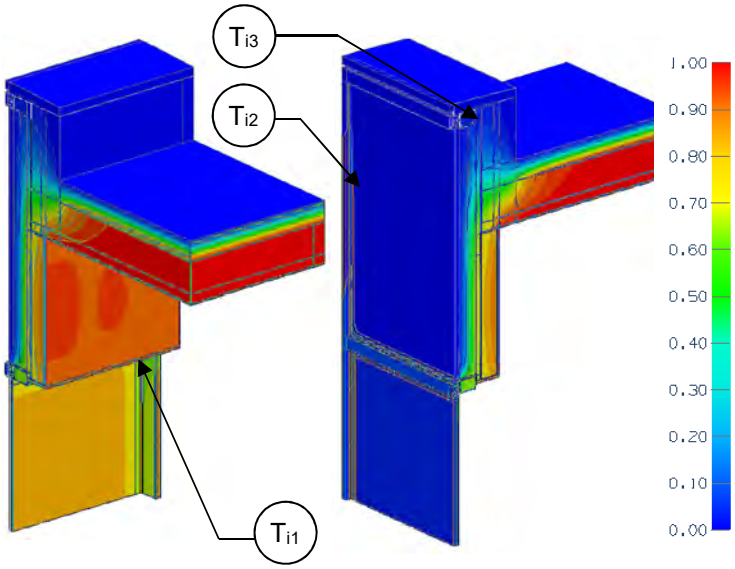

View from Interior View from Exterior

Thermal Performance Indicators

Spandrel Wall 1D (Nominal) R-Value	R_{1D}	R-3.7 (0.65 RSI) + backpan insulation
Transmittance / Resistance without Anomaly	U_r, R_r, U_s, R_s, U_g	"clear field" U- and R-value r = roof s = spandrel wall g = glazing
Transmittance / Resistance	U, R	U- and R-values for overall assembly
Surface Temperature Index[1]	T_i	0 = exterior temperature 1 = interior temperature
Linear Transmittance	ψ	Incremental increase in transmittance per linear length of parapet

[1]Assumptions and limitations for surface temperatures identified in ASHRAE 1365-RP

Nominal (1D) vs. Assembly Performance Indicators

Base Assembly – Roof

Roof Insulation 1D R-Value (RSI)	R_r ft²·hr·°F / Btu (m² K / W)	U_r Btu/ft² ·hr ·°F (W/m² K)
R-20 (3.52)	R-21.9 (3.86)	0.046 (0.26)

Base Assembly - Glazing

$U_{centre\ of\ glass}$ Btu/ft² ·hr ·°F (W/m² K)	U_g Btu/ft² ·hr ·°F (W/m² K)
0.321 (1.82)	0.429 (2.44)

Base Assembly – Spandrel Section

Backpan Insulation 1D R-Value (RSI)	R_{1D} ft²·hr·°F / Btu (m² K / W)	R_s ft²·hr·°F / Btu (m² K / W)	U_s Btu/ft² ·hr ·°F (W/m² K)
R-8.4 (1.48)	R-12.1 (2.13)	R-6.9 (1.21)	0.145 (0.82)
R-16.8 (2.96)	R-20.5 (3.61)	R-8.8 (1.55)	0.113 (0.64)

Parapet Linear Transmittance

Spandrel Insulation 1D R-Value (RSI)	R ft²·hr·°F / Btu (m² K / W)	U Btu/ft² ·hr ·°F (W/m² K)	ψ Btu/ft ·hr·°F (W/m K)
R-8.4 (1.48)	R-3.6 (0.63)	0.280 (1.59)	0.493 (0.853)
R-16.8 (2.96)	R-3.9 (0.68)	0.259 (1.47)	0.484 (0.838)

Temperature Indices

	R8.4	R16.8	
T_{i1}	0.54	0.58	Min T on interior frame, along head at edge of glazing
T_{i2}	0.56	0.57	Min T on concrete ceiling, at curtain wall anchor
T_{i3}	0.09	0.10	Min T on frame, at top of parapet

Detail 2.2.2

Conventional Curtain Wall System –Insulated Spandrel & Roof Intersection

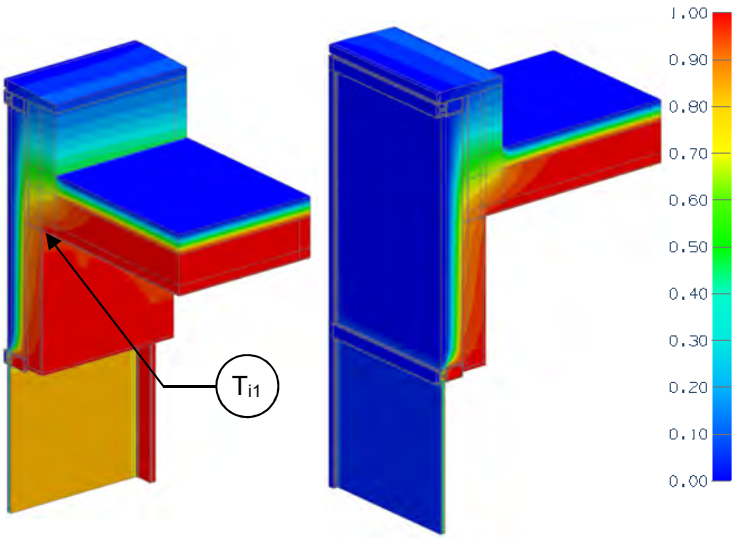

View from Interior[2] View from Exterior[2]

Thermal Performance Indicators

Spandrel Wall 1D (Nominal) R-Value	R_{1D}	R-3.7 (0.65 RSI) + backpan insulation
Transmittance / Resistance without Anomaly	U_r, R_r, U_s, R_s, U_g	"clear wall" U- and R-value r = roof s = spandrel wall g = glazing
Transmittance / Resistance	U, R	U and R-values for the assembly
Surface Temperature Index[1]	T_i	0 = exterior temperature 1 = interior temperature
Linear Transmittance	ψ	Incremental increase in transmittance per linear length of parapet

[1]Assumptions and limitations for surface temperatures identified in ASHRAE 1365-RP
[2]Thermal image shown is for the Aerogel detail

Nominal (1D) vs. Assembly Performance Indicators

Base Assembly – Roof

Roof Insulation 1D R-Value (RSI)	R_r ft²·hr·°F / Btu (m² K / W)	U_r Btu/ft² ·hr ·°F (W/m² K)
R-20 (3.52)	R-21.9 (3.86)	0.046 (0.26)

Base Assembly – Glazing

$U_{centre\ of\ glass}$ Btu/ft² ·hr ·°F (W/m² K)	U_g Btu/ft² ·hr ·°F (W/m² K)
0.321 (1.82)	0.429 (2.44)

Base Assembly – Spandrel Section

Backpan Insulation 1D R-Value (RSI)	R_{1D} ft²·hr·°F / Btu (m² K / W)	R_s ft²·hr·°F / Btu (m² K / W)	U_s Btu/ft² ·hr ·°F (W/m² K)
R-16.8 (2.96)	R-20.5 (3.61)	R-8.9 (1.56)	0.112 (0.64)

Parapet Linear Transmittance

Parapet Insulation	R ft²·hr·°F / Btu (m² K / W)	U Btu/ft² ·hr ·°F (W/m² K)	ψ Btu/ft hr °F (W/m K)
Conventional	R-2.5 (0.44)	0.397 (2.25)	0.614 (1.06)
Aerogel	R-2.8 (0.49)	0.363 (2.06)	0.513 (0.89)

Temperature Indices

	Conventional	Aerogel	
T_{i1}	0.94	0.94	Min T on interior concrete, at roof intersection

Detail 2.2.3

Conventional Curtain Wall System with Insulated Spandrel Panel and 3 5/8″ x 1 5/8″ Steel Stud (16″ o.c.) – Concrete Parapet Roof Intersection & Spray Foam Insulation in Stud Cavity

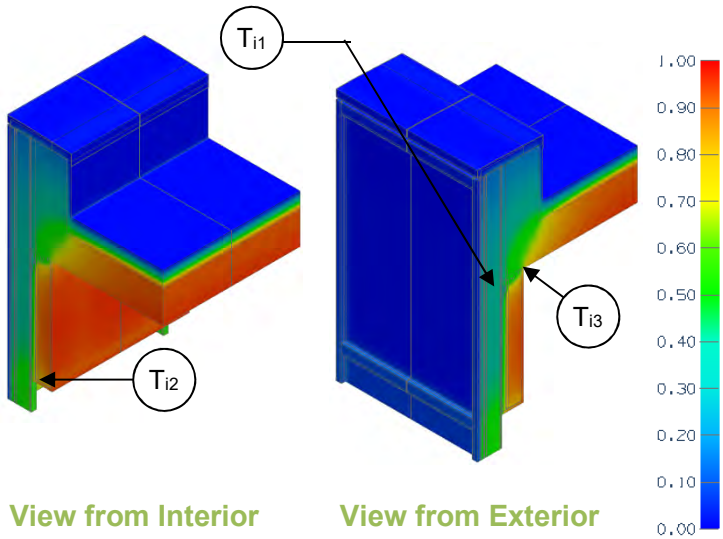

View from Interior View from Exterior

Thermal Performance Indicators

Assembly 1D (Nominal) R-Value	R_{1D}	R-14.9 (2.62 RSI) + backpan insulation
Transmittance / Resistance without Anomaly	U_r, R_r, U_s, R_s	"clear wall" U- and R-value r = insulated roof s = curtain wall spandrel
Surface Temperature Index[1]	T_i	0 = exterior temperature 1 = interior temperature
Linear Transmittance	ψ	Incremental increase in transmittance per linear length of parapet

[1]Assumptions and limitations for surface temperatures identified in ASHRAE 1365-RP

Nominal (1D) vs. Assembly Performance Indicators

Base Assembly – Spandrel Panel Section

Backpan Insulation 1D R-Value (RSI)	R_{1D} ft²·hr·°F / Btu (m² K / W)	R_s ft²·hr·°F / Btu (m² K / W)	U_s Btu/ft² ·hr ·°F (W/m² K)
R-1[2] (0.18)	R-15.9 (2.80)	R-7.4 (1.30)	0.135 (0.77)
R-5 (0.88)	R-19.9 (3.50)	R-8.2 (1.44)	0.122 (0.69)
R-15 (2.64)	R-29.9 (5.26)	R-8.8 (1.55)	0.113 (0.64)
R-25 (4.40)	R-39.9 (7.02)	R-9.1 (1.60)	0.110 (0.63)

[2] This value represents no insulation in the back pan.

Base Assembly – Roof

Roof Insulation 1D R-Value (RSI)	R_r ft²·hr·°F / Btu (m² K / W)	U_r Btu/ft² ·hr ·°F (W/m² K)
R-20 (3.52)	R-21.9 (3.86)	0.046 (0.26)

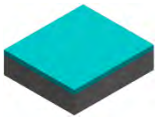

Parapet Linear Transmittance

Backpan Insulation 1D R-Value (RSI)	R ft²·hr·°F / Btu (m² K / W)	U Btu/ft² ·hr ·°F (W/m² K)	ψ Btu/ft hr °F (W/m K)
R-1 (0.18)	R-6.6 (1.16)	0.151 (0.86)	0.426 (0.738)
R-5 (0.88)	R-7.0 (1.23)	0.143 (0.81)	0.404 (0.699)
R-15 (2.64)	R-7.4 (1.30)	0.136 (0.77)	0.384 (0.664)
R-25 (4.40)	R-7.5 (1.32)	0.134 (0.76)	0.380 (0.657)

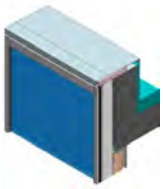

Temperature Indices

	R1	R5	R15	R25	
T_{i1}	0.26	0.34	0.38	0.39	Min T on Back Pan, at the mullion, the between slab and bottom transom
T_{i2}	0.47	0.51	0.53	0.53	Min T on interior frame, at mullion transom corner
T_{i3}	0.60	0.64	0.65	0.66	Min T ceiling, at gypsum/ceiling intersection, adjacent to curtain wall anchor

Detail 2.2.4

Conventional Curtain Wall System with Insulated Spandrel Panel & 3 5/8" x 1 5/8" Steel Stud (16" o.c.) – Insulated Concrete with Spandrel & Roof Intersection

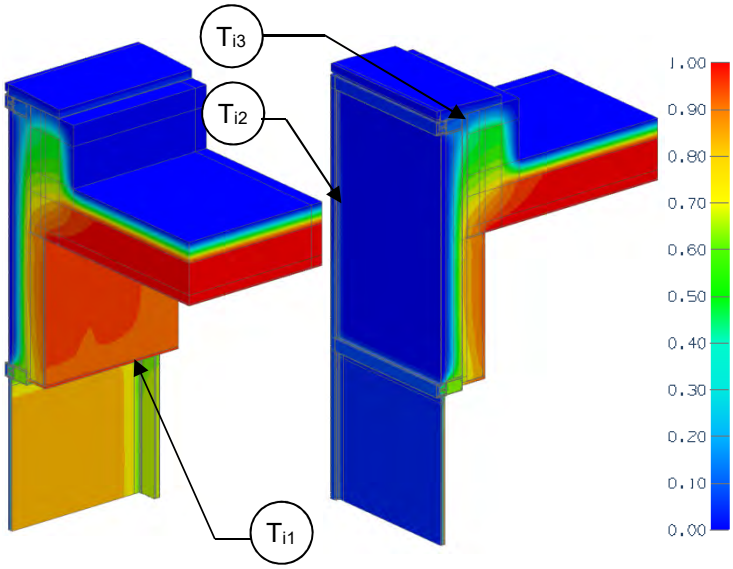

View from Interior View from Exterior

Thermal Performance Indicators

Spandrel Wall 1D (Nominal) R-Value	R_{1D}	R-3.7 (0.65 RSI) + backpan insulation
Transmittance / Resistance without Anomaly	U_r, R_r, U_s, R_s, U_g	"clear field" U- and R-value r = roof s = spandrel wall g = glazing
Transmittance / Resistance	U, R	U- and R-values for overall assembly
Surface Temperature Index[1]	T_i	0 = exterior temperature 1 = interior temperature
Linear Transmittance	ψ	Incremental increase in transmittance per linear length of parapet

[1]Assumptions and limitations for surface temperatures identified in ASHRAE 1365-RP

Nominal (1D) vs. Assembly Performance Indicators

Base Assembly – Roof

Roof Insulation 1D R-Value (RSI)	R_r ft²·hr·°F / Btu (m² K / W)	U_r Btu/ft² ·hr ·°F (W/m² K)
R-20 (3.52)	R-21.9 (3.86)	0.046 (0.26)

Base Assembly - Glazing

$U_{centre\ of\ glass}$ Btu/ft² ·hr ·°F (W/m² K)	U_g Btu/ft² ·hr ·°F (W/m² K)
0.321 (1.82)	0.429 (2.44)

Base Assembly – Spandrel Section

Backpan Insulation 1D R-Value (RSI)	R_{1D} ft²·hr·°F / Btu (m² K / W)	R_s ft²·hr·°F / Btu (m² K / W)	U_s Btu/ft² ·hr ·°F (W/m² K)
R-8.4 (1.48)	R-12.1 (2.13)	R-6.9 (1.21)	0.145 (0.82)
R-16.8 (2.96)	R-20.5 (3.61)	R-8.8 (1.55)	0.113 (0.64)

Parapet Linear Transmittance

Spandrel Insulation 1D R-Value (RSI)	R ft²·hr·°F / Btu (m² K / W)	U Btu/ft² ·hr ·°F (W/m² K)	ψ Btu/ft ·hr·°F (W/m K)
R-8.4 (1.48)	R-3.7 (0.64)	0.273 (1.55)	0.444 (0.768)
R-16.8 (2.96)	R-3.9 (0.69)	0.254 (1.44)	0.439 (0.760)

Temperature Indices

	R8.4	R16.8	
T_{i1}	0.49	0.53	Min T on interior frame, along head at edge of glazing
T_{i2}	0.57	0.64	Min T on concrete ceiling, at curtain wall anchor
T_{i3}	0.13	0.15	Min T on frame, at top of parapet

Detail 2.3.1

Conventional Curtain Wall System with Insulated Spandrel Panel– Un-insulated Jamb Intersection with Vision Section

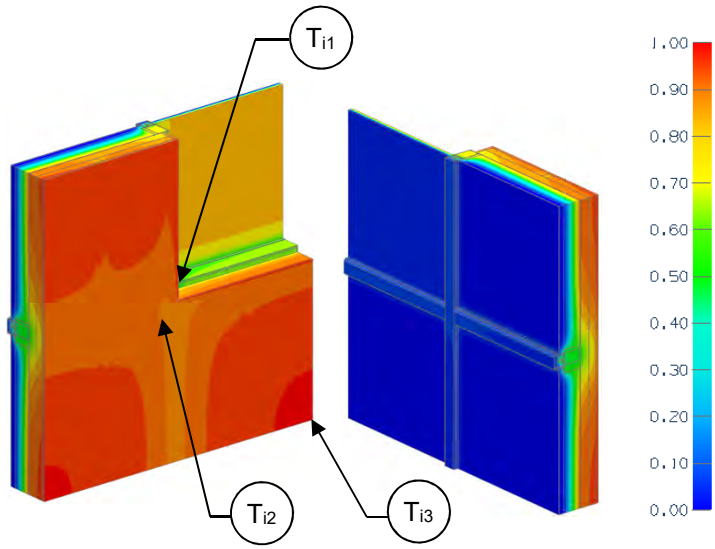

View from Interior View from Exterior

Thermal Performance Indicators

Assembly 1D (Nominal) R-Value	R_{1D}	R-3.7 (0.65 RSI) + backpan insulation
Transmittance / Resistance	U_w, R_w, U_g	U-value and R-value for w = spandrel wall g = glazing, including framing
Transmittance / Resistance	U, R	U- and R-values for overall assembly
Surface Temperature Index[1]	T_i	0 = exterior temperature 1 = interior temperature

[1]Assumptions and limitations for surface temperatures identified in ASHRAE 1365-RP

Nominal (1D) vs. Assembly Performance Indicators

Spandrel Section

Backpan Insulation 1D R-Value (RSI)	R_{1D} ft²·hr·°F / Btu (m² K / W)	R_w ft²·hr·°F / Btu (m² K / W)	U_w Btu/ft² ·hr ·°F (W/m² K)
R-8.4 (1.48)	R-12.1 (2.13)	R-4.5 (0.80)	0.221 (1.25)
R-16.8 (2.96)	R-20.5 (3.61)	R-5.3 (0.93)	0.189 (1.07)

Glazing

$U_{centre\ of\ glass}$ Btu/ft² ·hr ·°F (W/m² K)	U_g Btu/ft² ·hr ·°F (W/m² K)
0.321 (1.82)	0.429 (2.44)

Combined Assembly

Backpan Insulation 1D R-Value (RSI)	R ft²·hr·°F / Btu (m² K / W)	U Btu/ft² ·hr ·°F (W/m² K)
R-8.4 (1.48)	R-3.7 (0.65)	0.273 (1.55)
R-16.8 (2.96)	R-4.0 (0.71)	0.249 (1.41)

Temperature Indices

	R8.4	R16.8	
T_{i1}	0.46	0.52	Min T on frame, at corner of lower glazing
T_{i2}	0.47	0.58	Min T on backpan, at upper corner diagonal from glazing
T_{i3}	0.81	0.88	Max T on backpan, at centre of backpan below glazing

Detail 2.3.2

Conventional Curtain Wall System with Insulated Spandrel Panel–Rigid Insulated Jamb Intersection with Vision Section

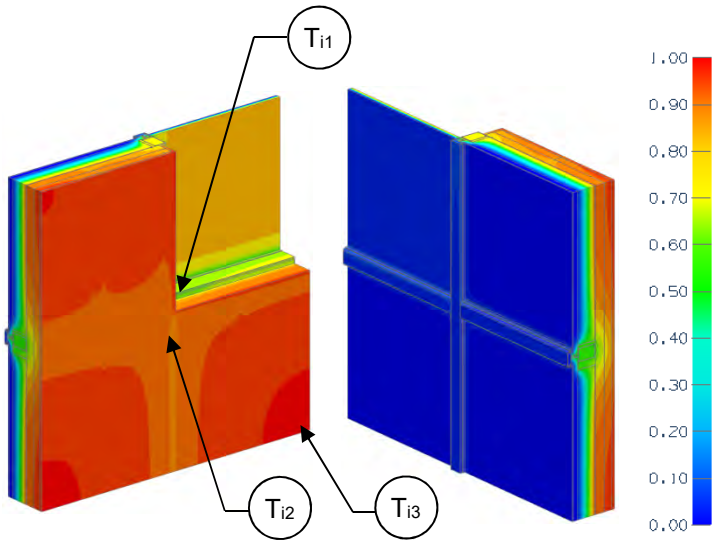

View from Interior View from Exterior

Thermal Performance Indicators

Assembly 1D (Nominal) R-Value	R_{1D}	R-3.7 (0.65 RSI) + backpan insulation
Transmittance / Resistance	U_w, R_w, U_g	U-value and R-value for w = spandrel wall g = glazing, including framing
Transmittance / Resistance	U, R	U- and R-values for overall assembly
Surface Temperature Index[1]	T_i	0 = exterior temperature 1 = interior temperature

[1]Assumptions and limitations for surface temperatures identified in ASHRAE 1365-RP

Nominal (1D) vs. Assembly Performance Indicators

Spandrel Section

Backpan Insulation 1D R-Value (RSI)	R_{1D} ft²·hr·°F / Btu (m² K / W)	R_w ft²·hr·°F / Btu (m² K / W)	U_w Btu/ft² ·hr ·°F (W/m² K)
R-8.4 (1.48)	R-12.1 (2.13)	R-4.8 (0.84)	0.209 (1.19)
R-16.8 (2.96)	R-20.5 (3.61)	R-6.2 (1.09)	0.161 (0.92)

Glazing

$U_{centre\ of\ glass}$ Btu/ft² ·hr ·°F (W/m² K)	U_g Btu/ft² ·hr ·°F (W/m² K)
0.321 (1.82)	0.429 (2.44)

Combined Assembly

Backpan Insulation 1D R-Value (RSI)	R ft²·hr·°F / Btu (m² K / W)	U Btu/ft² ·hr ·°F (W/m² K)
R-8.4 (1.48)	R-3.8 (0.67)	0.264 (1.50)
R-16.8 (2.96)	R-4.4 (0.77)	0.228 (1.30)

Temperature Indices

	R8.4	R16.8	
T_{i1}	0.47	0.54	Min T on frame, at corner of lower glazing
T_{i2}	0.50	0.62	Min T on backpan, at upper corner diagonal from glazing
T_{i3}	0.81	0.88	Max T on backpan, at centre of backpan below glazing

Detail 2.3.3

Conventional Curtain Wall System with Insulated Spandrel Panel – Aerogel Insulated Jamb Intersection with Vision Section

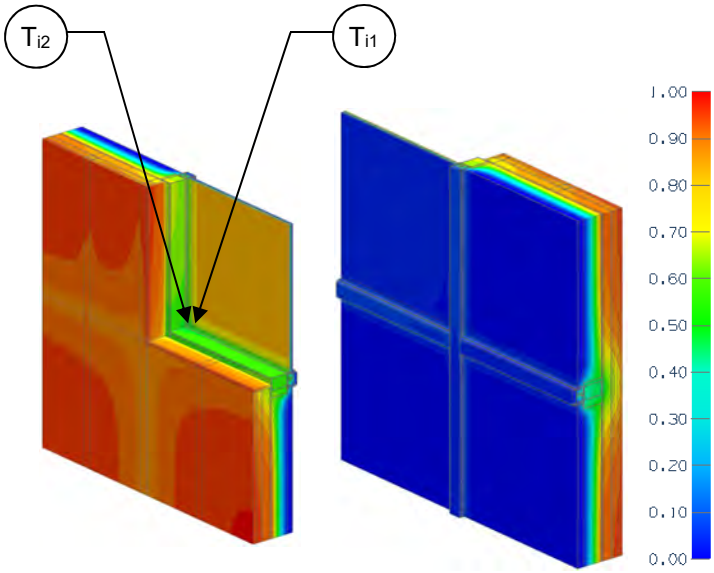

View from Interior[2] View from Exterior[2]

Thermal Performance Indicators

Assembly 1D (Nominal) R-Value	R_{1D}	R-3.7 (0.65 RSI) + R-16.8 (2.96 RSI) backpan insulation
Transmittance / Resistance	U_w, R_w, U_g	U-value and R-value for w = spandrel wall g = glazing, including framing
Transmittance / Resistance	U, R	U and R-values for the assembly
Surface Temperature Index[1]	T_i	0 = exterior temperature 1 = interior temperature

[1]Assumptions and limitations for surface temperatures identified in ASHRAE 1365-RP
[2]Thermal image shown is for the Aerogel detail

Nominal (1D) vs. Assembly Performance Indicators

Spandrel Section

Jamb Condition	R_{1D} ft²·hr·°F / Btu (m² K / W)	R_w ft²·hr·°F / Btu (m² K / W)	U_w Btu/ft² ·hr ·°F (W/m² K)
No Aerogel	R-20.5 (3.61)	R-5.3 (0.93)	0.189 (1.07)
Aerogel	R-20.5 (3.61)	R-6.5 (1.14)	0.155 (0.88)

Glazing

$U_{centre\ of\ glass}$ Btu/ft² ·hr ·°F (W/m² K)	U_g Btu/ft² ·hr ·°F (W/m² K)
0.321 (1.82)	0.429 (2.44)

Combined Assembly

Jamb Condition	R ft²·hr·°F / Btu (m² K / W)	U Btu/ft² ·hr ·°F (W/m² K)
No Aerogel	R-4.0 (0.71)	0.249 (1.41)
Aerogel	R-4.5 (0.79)	0.224 (1.27)

Temperature Indices

	Conventional	Aerogel	
T_{i1}	0.47	0.51	Min T on glazing, at corner of glass
T_{i2}	0.53	0.59	Min T on frame, at corner of glass

Detail 2.4.1

Conventional Curtain Wall with Insulated Spandrel Panel & 3 5/8" x 1 5/8" Steel Stud (16" o.c.) - Beam Intersection Connected to Concrete Slab

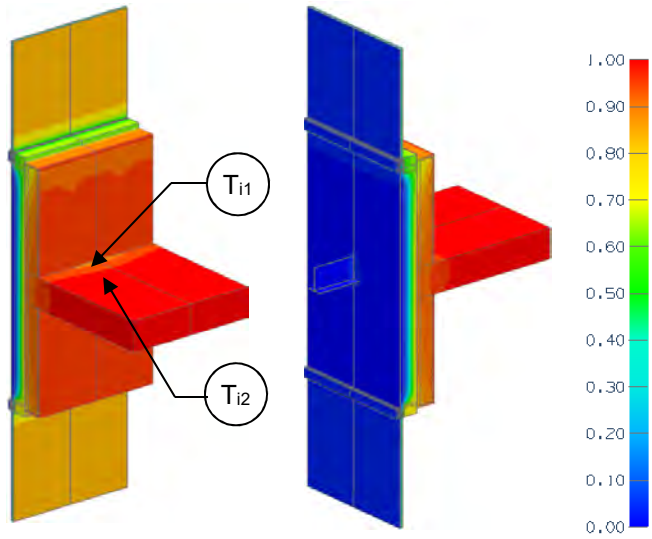

View from Interior View from Exterior

Thermal Performance Indicators

Assembly 1D (Nominal) R-Value	R_{1D}	R-3.2 (0.57 RSI) + backpan insulation
Transmittance / Resistance without Anomaly	U_o, R_o	"clear wall" U- and R-value of spandrel without slab and beam
Transmittance / Resistance	U, R	U and R-values for the assembly including spandrel, slab and beam intersection
Surface Temperature Index[1]	T_i	0 = exterior temperature 1 = interior temperature
Point Transmittance	χ	Incremental increase in transmittance for steel beam attached to slab

[1]Assumptions and limitations for surface temperatures identified in ASHRAE 1365-RP

Nominal (1D) vs. Assembly Performance Indicators

Backpan insulation 1D R-Value (RSI)	R_{1D} ft²·hr·°F / Btu (m² K / W)	R_o ft²·hr·°F / Btu (m² K / W)	U_o Btu/ft² ·hr ·°F (W/m² K)	R ft²·hr·°F / Btu (m² K / W)	U Btu/ft² ·hr ·°F (W/m² K)	χ Btu/hr · °F (W/K)
R-8.4 (1.48)	R-11.6 (2.05)	R-6.5 (1.15)	0.153 (0.87)	R-5.6 (0.99)	0.177 (1.01)	0.182 (0.10)
R-16.8 (2.96)	R-20.0 (3.53)	R-8.1 (1.42)	0.124 (0.70)	R-6.6 (1.15)	0.153 (0.87)	0.220 (0.12)

Temperature Indices

	R8.4	R16.8	
T_{i1}	0.46	0.48	Min T on knife edge and backpan, at intersection
T_{i2}	0.69	0.68	Min T on slab, below knife edge intersection

Detail 2.4.2

Conventional Curtain Wall with Insulated Spandrel Panel & 5 5/8" x 1 5/8" Steel Stud (16" o.c.)- Beam Intersection Connected to Steel Beam

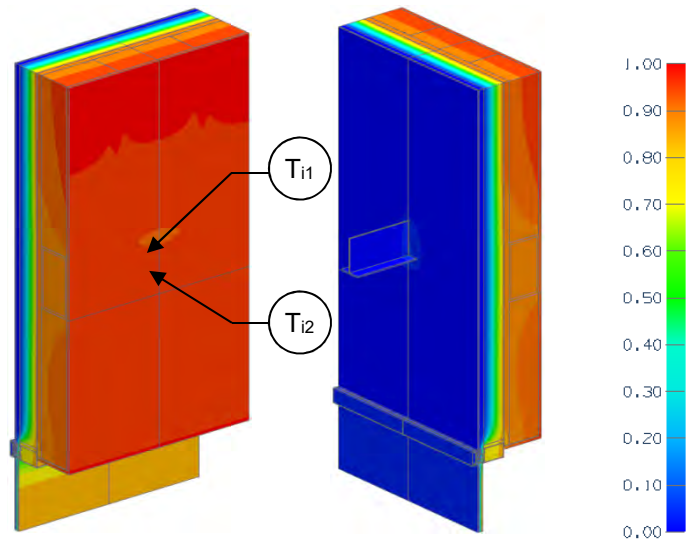

View from Interior View from Exterior

Thermal Performance Indicators

Assembly 1D (Nominal) R-Value	R_{1D}	R-3.2 (0.57 RSI) + ackpan insulation
Transmittance / Resistance without Anomaly	U_o, R_o	"clear wall" U- and R-value of spandrel without beam
Transmittance / Resistance	U, R	U and R-values for the assembly including spandrel and beam intersection
Surface Temperature Index[1]	T_i	0 = exterior temperature 1 = interior temperature
Point Transmittance	χ	Incremental increase in transmittance for steel beam attached to a steel beam

[1]Assumptions and limitations for surface temperatures identified in ASHRAE 1365-RP

Nominal (1D) vs. Assembly Performance Indicators

Backpan Insulation 1D R-Value (RSI)	R_{1D} ft²·hr·°F / Btu (m² K / W)	R_o ft²·hr·°F / Btu (m² K / W)	U_o Btu/ft² ·hr ·°F (W/m² K)	R ft²·hr·°F / Btu (m² K / W)	U Btu/ft² ·hr ·°F (W/m² K)	χ Btu/hr · °F (W/K)
R-8.4 (1.48)	R-11.6 (2.05)	R-9.5 (1.67)	0.105 (0.60)	R-7.1 (1.25)	0.141 (0.80)	0.268 (0.14)
R-16.8 (2.96)	R-20.0 (3.53)	R-13.5 (2.38)	0.074 (0.42)	R-8.8 (1.55)	0.114 (0.65)	0.296 (0.16)

Temperature Indices

	R8.4	R16.8	
T_{i1}	0.49	0.52	Min T on knife edge and backpan, at intersection
T_{i2}	0.66	0.69	Min T on steel beam, below knife edge intersection

Detail 2.4.3

Conventional Curtain Wall with Insulated Spandrel Panel & 3 5/8" x 1 5/8" Steel Stud (16" o.c.) - Canopy Beam & Gutter Intersection

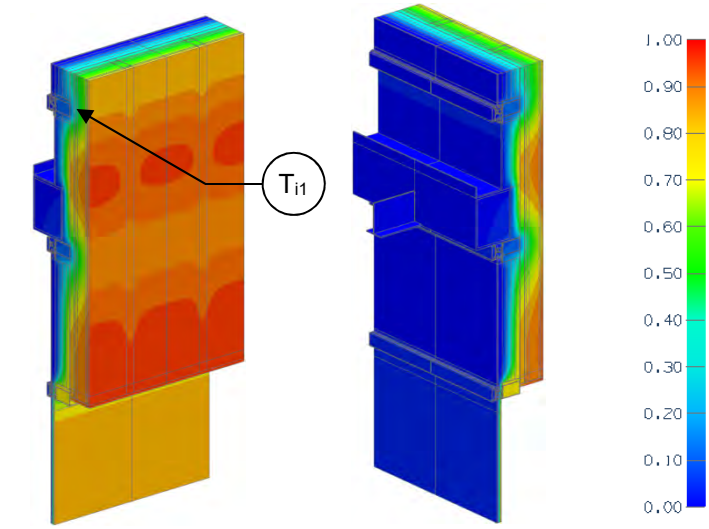

View from Interior View from Exterior

Thermal Performance Indicators

Assembly 1D (Nominal) R-Value	R_{1D}	R-3.2 (0.57 RSI) + backpan insulation
Transmittance / Resistance without Anomaly	U_o, R_o	"clear wall" U- and R-value of spandrel without beam
Transmittance / Resistance	U, R	U and R-values for the assembly including spandrel and beam intersection
Surface Temperature Index[1]	T_i	0 = exterior temperature 1 = interior temperature
Linear Transmittance	ψ	Incremental increase in transmittance per linear length of gutter

[1]Assumptions and limitations for surface temperatures identified in ASHRAE 1365-RP

Nominal (1D) vs. Assembly Performance Indicators

Backpan Insulation 1D R-Value (RSI)	R_{1D} ft²·hr·°F / Btu (m² K / W)	R_o ft²·hr·°F / Btu (m² K / W)	U_o Btu/ft² ·hr ·°F (W/m² K)	R ft²·hr·°F / Btu (m² K / W)	U Btu/ft² ·hr ·°F (W/m² K)	ψ Btu/ft ·hr·°F (W/m K)
R-8.4 (1.48)	R-11.6 (2.05)	R-9.4 (1.66)	0.106 (0.60)	R-4.5 (0.80)	0.221 (1.25)	0.588 (1.017)
R-16.8 (2.96)	R-20.0 (3.53)	R-13.5 (2.38)	0.074 (0.42)	R-4.8 (0.84)	0.210 (1.19)	0.695 (1.204)

Temperature Indices

	R8.4	R16.8	
T_{i1}	0.15	0.16	Min T on upper backpan, away from knife edge

Detail 2.4.4

Conventional Curtain Wall with Insulated Spandrel Panel & 5 5/8" x 1 5/8" Steel Stud (16" o.c.) - Beam Intersection Connected to Steel Beam with Additional Mullions

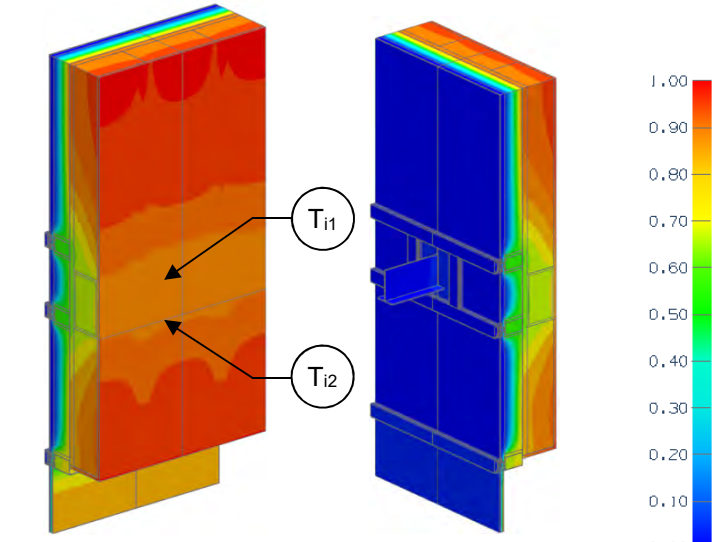

View from Interior View from Exterior

Thermal Performance Indicators

Assembly 1D (Nominal) R-Value	R_{1D}	R-3.2 (0.57 RSI) + backpan insulation
Transmittance / Resistance without Anomaly	U_o, R_o	"clear wall" U- and R-value of spandrel without beam
Transmittance / Resistance	U, R	U and R-values for the assembly including spandrel and beam intersection
Surface Temperature Index[1]	T_i	0 = exterior temperature 1 = interior temperature
Point Transmittance	χ	Incremental increase in transmittance for a steel beam attached to a steel beam with additional mullions

[1]Assumptions and limitations for surface temperatures identified in ASHRAE 1365-RP

Nominal (1D) vs. Assembly Performance Indicators

Backpan Insulation 1D R-Value (RSI)	R_{1D} ft²·hr·°F / Btu (m² K / W)	R_o ft²·hr·°F / Btu (m² K / W)	U_o Btu/ft² ·hr ·°F (W/m² K)	R ft²·hr·°F / Btu (m² K / W)	U Btu/ft² ·hr ·°F (W/m² K)	χ Btu/hr · °F (W/K)
R-8.4 (1.48)	R-11.6 (2.05)	R-5.8 (1.02)	0.172 (0.98)	R-5.3 (0.93)	0.19 (1.08)	0.148 (0.08)
R-16.8 (2.96)	R-20.0 (3.53)	R-7.4 (1.30)	0.135 (0.77)	R-6.3 (1.10)	0.16 (0.91)	0.208 (0.11)

Temperature Indices

	R8.4	R16.8	
T_{i1}	0.42	0.45	Min T on knife edge and backpan, at intersection
T_{i2}	0.53	0.57	Min T on steel beam, underneath the knife edge

Detail 2.5.1

Conventional Curtain Wall System – At-Grade Slab Transition

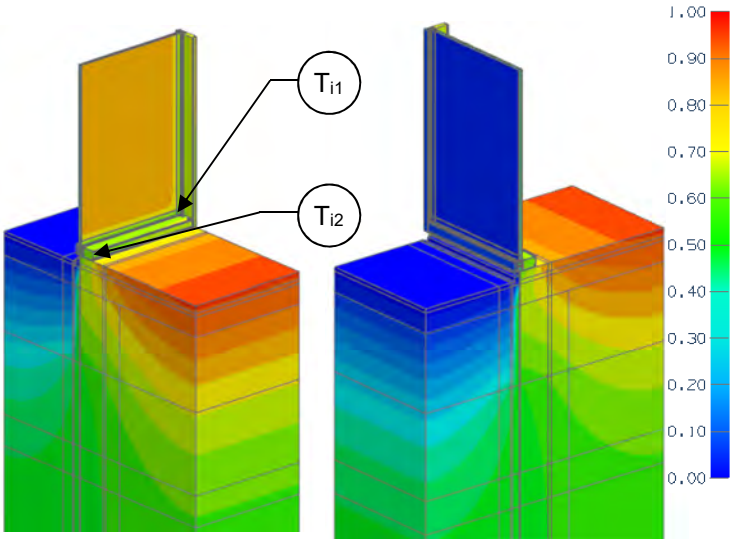

View from Interior[2] View from Exterior[2]

Thermal Performance Indicators

Transmittance / Resistance without Anomaly	U_f, R_f, U_g	"clear field" U- and R-value: f = foundation g = glazing, including framing
Transmittance / Resistance	U, R	U and R-values for the assembly
Surface Temperature Index[1]	T_i	0 = exterior temperature 1 = interior temperature
Linear Transmittance	ψ	Incremental increase in transmittance per linear length of slab-on-grade

[1]Assumptions and limitations for surface temperatures identified in ASHRAE 1365-RP
[2]Thermal image shown is for the Aerogel detail
[3]R-value and U-value do not include the soil.

Nominal (1D) vs. Assembly Performance Indicators

Base Assembly – Foundation[3]

R_f ft²·hr·°F / Btu (m² K / W)	U_f Btu/ft² ·hr ·°F (W/m² K)
R-1.3 (0.24)	0.746 (4.24)

Base Assembly - Glazing

$U_{centre\ of\ glass}$ Btu/ft² ·hr ·°F (W/m² K)	U_g Btu/ft² ·hr ·°F (W/m² K)
0.321 (1.82)	0.429 (2.44)

Foundation Linear Transmittance

Slab Edge Insulation	R ft²·hr·°F / Btu (m² K / W)	U Btu/ft² ·hr ·°F (W/m² K)	ψ Btu/ft hr °F (W/m K)
Conventional	R-3.9 (0.68)	0.259 (1.47)	0.495 (0.857)
Aerogel	R-4.1 (0.72)	0.244 (1.39)	0.370 (0.640)

Temperature Indices

	Conventional	Aerogel	
T_{i1}	0.54	0.50	Min T on glazing, at corner of glass
T_{i2}	0.70	0.62	Min T on concrete, at curtain wall sill intersection

3.0 Unitized Curtain Wall

Detail 3.1.1 ..... **B.3.1**

Unitized Curtain Wall System – Spandrel Clear Wall & No Interior Stud Cavity Insulation

Detail 3.1.2 ..... **B.3.2**

Unitized Curtain Wall System – Spandrel Clear Wall & Interior Sprayfoam Insulation

Detail 3.2.1 ..... **B.3.3**

Unitized Curtain Wall System – Intermediate Floor Intersection & No Interior Stud Cavity Insulation

Detail 3.2.2 ..... **B.3.4**

Unitized Curtain Wall System – Intermediate Floor Intersection & Interior Sprayfoam Insulation

Detail 3.2.3 ..... **B.3.5**

Unitized Curtain Wall System with 4-Sided Structural Silicone Joints and 5’ x 5’ Spandrel Section – Insulated Backpan and Intermediate Floor Intersection

Detail 3.2.4 ..... **B.3.6**

Unitized Curtain Wall System with 4-Sided Structural Silicone Joints and 5’ x 5’ Spandrel Section – AIM Applications and Intermediate Floor Intersection

Detail 3.2.5 ..... **B.3.7**

Unitized Curtain Wall System with 4-Sided Structural Silicone Joints and 5’ x 5’ Spandrel Section – Insulated Backpan and Improved Glazing at Intermediate Floor Intersection

Detail 3.2.6 ..... **B.3.8**

Unitized Curtain Wall System with 4-Sided Structural Silicone Joints and 5’ x 5’ Spandrel Section – AIM Applications and Improved Glazing at Intermediate Floor Intersection

Detail 3.3.1 ..... **B.3.9**

Unitized Curtain Wall System – Window Wall Transition

Detail 3.3.2 ..... **B.3.10**

Unitized Curtain Wall System – Window Wall Transition with Foam Insulation

Detail 3.1.1

Unitized Curtain Wall System – Spandrel Clear Wall & No Interior Stud Cavity Insulation

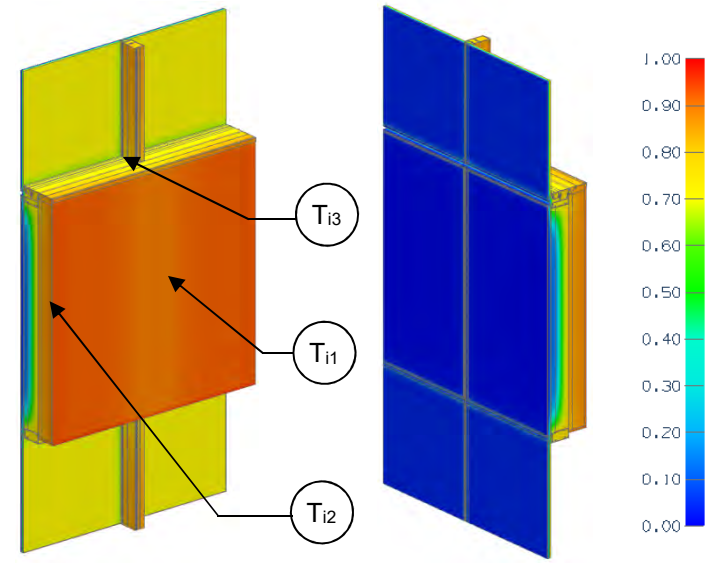

View from Interior View from Exterior

Thermal Performance Indicators

Assembly 1D (Nominal) R-Value	R_{1D}	R-3.7 (0.65 RSI) + backpan insulation
Transmittance / Resistance	U_w, R_w, U_g	U-value and R-value for w = spandrel wall g = glazing, including framing
Transmittance / Resistance	U, R	U- and R-values for overall assembly
Surface Temperature Index[1]	T_i	0 = exterior temperature 1 = interior temperature

[1]Assumptions and limitations for surface temperatures identified in ASHRAE 1365-RP

Nominal (1D) vs. Assembly Performance Indicators

Spandrel Section

Backpan Insulation 1D R-Value (RSI)	R_{1D} ft²·hr·°F / Btu (m² K / W)	R_w ft²·hr·°F / Btu (m² K / W)	U_w Btu/ft² ·hr ·°F (W/m² K)
R-8.4 (1.48)	R-12.1 (2.13)	R-6.4 (1.12)	0.157 (0.89)
R-16.8 (2.96)	R-20.5 (3.61)	R-7.7 (1.36)	0.129 (0.74)

Glazing

$U_{centre\ of\ glass}$ Btu/ft² ·hr ·°F (W/m² K)	U_g Btu/ft² ·hr ·°F (W/m² K)
0.321 (1.82)	0.373 (2.12)

Combined Assembly

Backpan Insulation 1D R-Value (RSI)	R ft²·hr·°F / Btu (m² K / W)	U Btu/ft² ·hr ·°F (W/m² K)
R-8.4 (1.48)	R-3.8 (0.66)	0.266 (1.51)
R-16.8 (2.96)	R-3.3 (0.69)	0.254 (1.44)

Temperature Indices

	R8.4	R16.8	
T_{i1}	0.66	0.70	Min T in stud cavity, at edge of backpan
T_{i2}	0.82	0.85	Max T on backpan, at centre of backpan
T_{i3}	0.61	0.62	Min T on frame, at corner of glazing

Detail 3.1.2

Unitized Curtain Wall System – Spandrel Clear Wall & Interior Sprayfoam Insulation

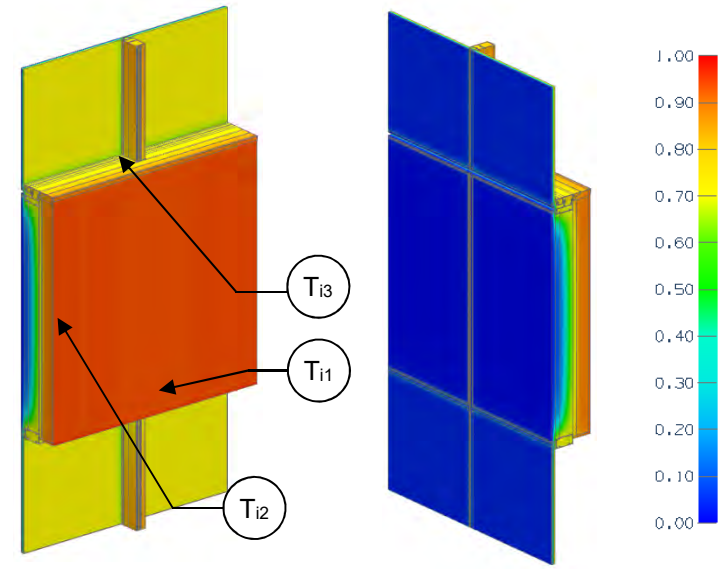

View from Interior View from Exterior

Thermal Performance Indicators

Assembly 1D (Nominal) R-Value	R_{1D}	R-15.7 (2.77 RSI) + backpan insulation
Transmittance / Resistance	U_w, R_w, U_g	U-value and R-value for w = spandrel wall g = glazing, including framing
Transmittance / Resistance	U, R	U- and R-values for overall assembly
Surface Temperature Index[1]	T_i	0 = exterior temperature 1 = interior temperature

[1]Assumptions and limitations for surface temperatures identified in ASHRAE 1365-RP

Nominal (1D) vs. Assembly Performance Indicators

Spandrel Section

Backpan Insulation 1D R-Value (RSI)	R_{1D} ft²·hr·°F / Btu (m² K / W)	R_w ft²·hr·°F / Btu (m² K / W)	U_w Btu/ft² ·hr ·°F (W/m² K)
R-8.4 (1.48)	R-24.1 (4.24)	R-7.6 (1.33)	0.132 (0.75)
R-16.8 (2.96)	R-32.5 (5.72)	R-8.9 (1.57)	0.112 (0.64)

Glazing

$U_{centre\ of\ glass}$ Btu/ft² ·hr ·°F (W/m² K)	U_g Btu/ft² ·hr ·°F (W/m² K)
0.321 (1.82)	0.371 (2.11)

Combined Assembly

Backpan Insulation 1D R-Value (RSI)	R ft²·hr·°F / Btu (m² K / W)	U Btu/ft² ·hr ·°F (W/m² K)
R-8.4 (1.48)	R-4.0 (0.70)	0.253 (1.44)
R-16.8 (2.96)	R-4.1 (0.72)	0.244 (1.39)

Temperature Indices

	R8.4	R16.8	
T_{i1}	0.83	0.84	Min T on sprayfoam, at bottom of spandrel
T_{i2}	0.89	0.90	Max T on sprayfoam, away from frame and studs
T_{i3}	0.60	0.61	Min T on frame, at corner of glazing

Detail 3.2.1

Unitized Curtain Wall System – Intermediate Floor Intersection & No Interior Stud Cavity Insulation

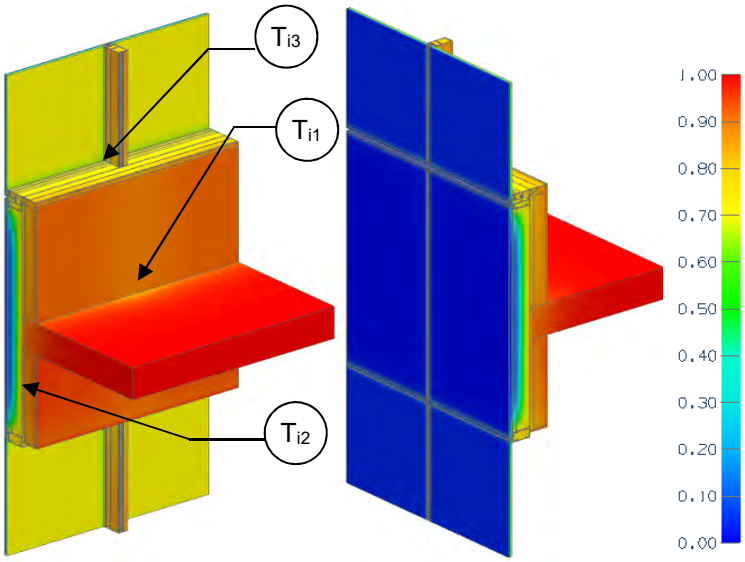

View from Interior View from Exterior

Thermal Performance Indicators

Assembly 1D (Nominal) R-Value	R_{1D}	R-3.7 (0.65 RSI) + backpan insulation
Transmittance / Resistance without Anomaly	U_w, R_w, U_g,	"clear wall" U- and R-value, w = spandrel wall without slab g = glazing
Transmittance / Resistance	U_s R_s, U_t, R_t	U and R-values for s = spandrel with slab t = combined glazing and spandrel with slab
Surface Temperature Index[1]	T_i	0 = exterior temperature 1 = interior temperature
Linear Transmittance	ψ	Incremental increase in transmittance per linear length of slab

[1]Assumptions and limitations for surface temperatures identified in ASHRAE 1365-RP
[2]Spandrel section includes interface with slab and vision glazing

Nominal (1D) vs. Assembly Performance Indicators

Base Assembly - Spandrel Section Only

Backpan Insulation 1D R-Value (RSI)	R_{1D} ft²·hr·°F / Btu (m² K / W)	R_w ft²·hr·°F / Btu (m² K / W)	U_w Btu/ft² ·hr ·°F (W/m² K)
R-8.4 (1.48)	R-12.1 (2.13)	R-6.4 (1.12)	0.157 (0.89)
R-16.8 (2.96)	R-20.5 (3.61)	R-7.7 (1.36)	0.129 (0.74)

Base Assembly - Glazing

$U_{centre\ of\ glass}$ Btu/ft² ·hr ·°F (W/m² K)	U_g Btu/ft² ·hr ·°F (W/m² K)
0.321 (1.82)	0.373 (2.12)

Slab Linear Transmittance

Backpan Insulation 1D R-Value (RSI)	R_t ft²·hr·°F / Btu (m² K / W)	U_t Btu/ft² ·hr ·°F (W/m² K)	ψ Btu/ft ·hr·°F (W/m K)
R-8.4 (1.48)	R-3.7 (0.66)	0.267 (1.52)	0.004 (0.007)
R-16.8 (2.96)	R-3.9 (0.69)	0.254 (1.44)	0.002 (0.004)

Spandrel Section with Slab[2]

R_s ft²·hr·°F / Btu (m² K / W)	U_s Btu/ft² ·hr ·°F (W/m² K)
R-6.3 (1.12)	0.158 (0.90)
R-7.7 (1.35)	0.130 (0.74)

Temperature Indices

	R8.4	R16.8	
T_{i1}	0.65	0.69	Min T in stud cavity, at anchor
T_{i2}	0.85	0.89	Max T on backpan, at centre of backpan under slab
T_{i3}	0.61	0.62	Min T on frame, at corner of glazing

Detail 3.2.2

Unitized Curtain Wall System – Intermediate Floor Intersection & Interior Sprayfoam Insulation

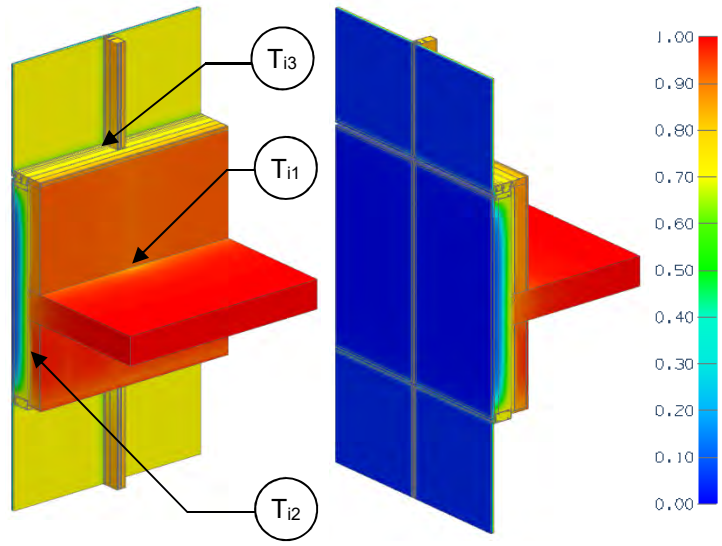

View from Interior View from Exterior

Thermal Performance Indicators

Assembly 1D (Nominal) R-Value	R_{1D}	R-15.7 (2.77 RSI) + backpan insulation
Transmittance / Resistance without Anomaly	U_w, R_w, U_g	"clear wall" U- and R-value, w = spandrel wall without slab g = glazing
Transmittance / Resistance	U_s, R_s, U_t, R_t	U and R-values for s = spandrel with slab t = combined glazing and spandrel with slab
Surface Temperature Index[1]	T_i	0 = exterior temperature 1 = interior temperature
Linear Transmittance	ψ	Incremental increase in transmittance per linear length of slab

[1]Assumptions and limitations for surface temperatures identified in ASHRAE 1365-RP
[2]Spandrel section includes interface with slab and vision glazing

Nominal (1D) vs. Assembly Performance Indicators

Base Assembly - Spandrel Section Only

Backpan Insulation 1D R-Value (RSI)	R_{1D} ft²·hr·°F / Btu (m² K / W)	R_w ft²·hr·°F / Btu (m² K / W)	U_w Btu/ft² ·hr ·°F (W/m² K)
R-8.4 (1.48)	R-24.1 (4.24)	R-7.6 (1.33)	0.132 (0.75)
R-16.8 (2.96)	R-32.5 (5.72)	R-8.9 (1.57)	0.112 (0.64)

Base Assembly - Glazing

$U_{centre\ of\ glass}$ Btu/ft² ·hr ·°F (W/m² K)	U_g Btu/ft² ·hr ·°F (W/m² K)
0.321 (1.82)	0.371 (2.11)

Slab Linear Transmittance

Backpan Insulation 1D R-Value (RSI)	R_t ft²·hr·°F / Btu (m² K / W)	U_t Btu/ft² ·hr ·°F (W/m² K)	ψ Btu/ft ·hr·°F (W/m K)
R-8.4 (1.48)	R-3.9 (0.69)	0.256 (1.45)	0.031 (0.053)
R-16.8 (2.96)	R-4.1 (0.71)	0.246 (1.40)	0.022 (0.038)

Spandrel Section with Slab²

R_s ft²·hr·°F / Btu (m² K / W)	U_s Btu/ft² ·hr ·°F (W/m² K)
R-7.2 (1.27)	0.138 (0.79)
R-8.6 (1.51)	0.117 (0.66)

Temperature Indices

	R8.4	R16.8	
T_{i1}	0.74	0.77	Min T on sprayfoam, at anchor
T_{i2}	0.94	0.95	Max T on sprayfoam, away from frame and studs below slab
T_{i3}	0.60	0.61	Min T on frame, at corner of glazing

Detail 3.2.3

Unitized Curtain Wall System with 4-Sided Structural Silicone Joints and 5' x 5' Spandrel Section – Insulated Backpan and Intermediate Floor Intersection

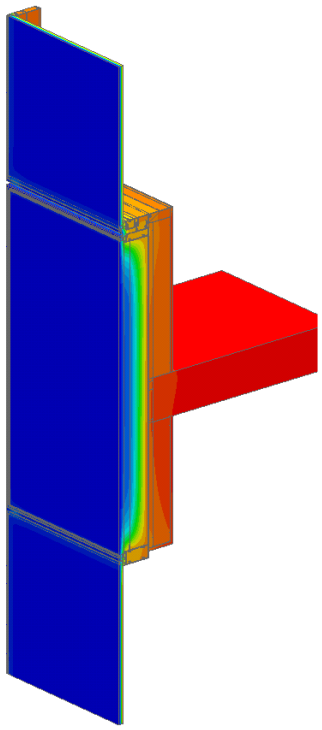

View from Exterior

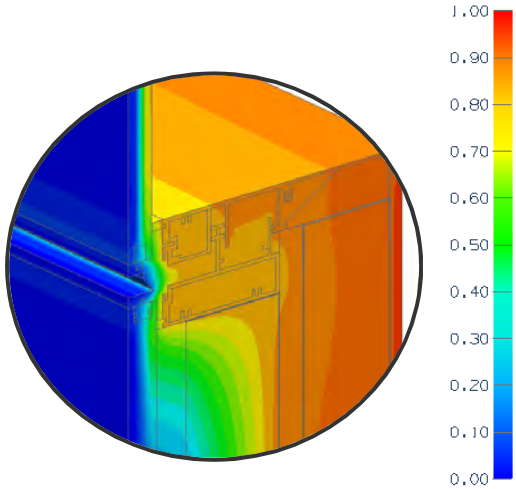

Mullion Detail

Thermal Performance Indicators

Transmittance / Resistance	U_s, R_s,	Spandrel Section U-value and "Effective" R-value (including slab)
	U_g, R_g,	Glazing U-value and "Effective" R-value
	U_t, R_t	Total Assembly U-value and "Effective" R-value

[1]U_t based on a window to wall ratio of 50%, but U_s is valid for all spandrel dimensions.

Scenarios

Scenario	Vision Glass and Spacer	Insulation Thickness and Application
H0.1	Double Glazed with Aluminum Spacer	4" (100 mm) Mineral Wool in Backpan
H0.2	Double Glazed with Silicone Warm Edge Spacer	4" (100 mm) Mineral Wool in Backpan

Nominal (1D) vs. Assembly Performance Indicators

Scenario	Insulation R-Value (RSI)	U_s Btu/ft^2 ·hr ·°F (W/m^2 K)	R_s ft^2·hr·°F / Btu (m^2 K / W)	U_g Btu/ft^2 ·hr ·°F (W/m^2 K)	R_g ft^2·hr·°F / Btu (m^2 K / W)	U_t[1] Btu/ft^2 ·hr ·°F (W/m^2 K)	R_t ft^2·hr·°F / Btu (m^2 K / W)
H0.1	R-16.8 (2.96)	0.233 (1.32)	R-4.3 (0.76)	0.370 (2.10)	R-2.7 (0.48)	0.302 (1.72)	R-3.3 (0.58)
H0.2	R-16.8 (2.96)	0.233 (1.32)	R-4.3 (0.76)	0.356 (2.02)	R-2.8 (0.50)	0.295 (1.67)	R-3.4 (0.60)

Detail 3.2.4

Unitized Curtain Wall System with 4-Sided Structural Silicone Joints and 5' x 5' Spandrel Section – AIM Applications and Intermediate Floor Intersection

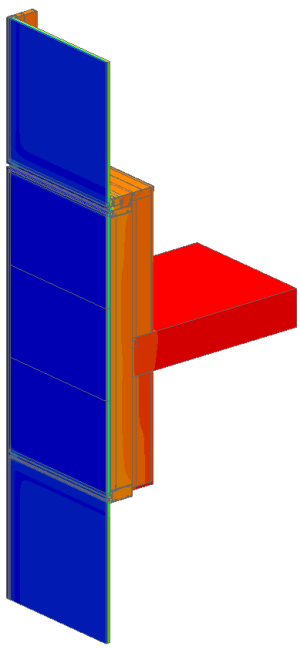

View from Exterior

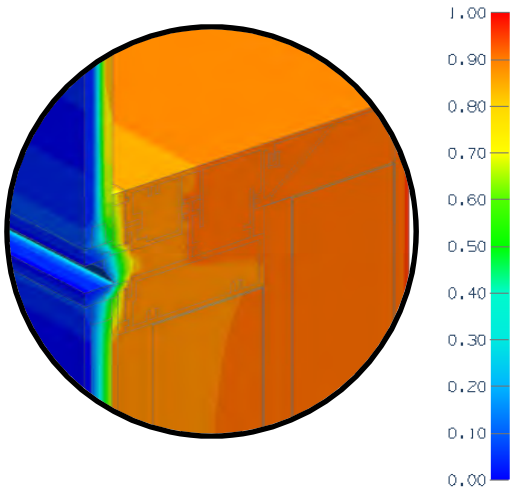

Mullion Detail

Thermal Performance Indicators

Transmittance / Resistance	U_s, R_s,	Spandrel Section U-value and "Effective" R-value (including slab)
	U_g, R_g	Glazing U-value and "Effective" R-value
	U_t, R_t	Total Assembly U-value and "Effective" R-value

[1]U_t based on a window to wall ratio of 50%, but U_s is valid for all spandrel dimensions.

AIM = Architectural Insulation Module

Scenarios

Scenario	Vision Glass and Spacer	Insulation Thickness and Application	AIM Spacer/Edge Condition
H1	Double Glazed with Silicone Warm Edge Spacer	0.75" (19 mm) AIM between Glass	Silicone Warm Edge Spacer
H2	Double Glazed with Silicone Warm Edge Spacer	0.75" (19 mm) AIM between Glass + 4" (100 mm) Mineral Wool in Backpan	Silicone Warm Edge Spacer
H3	Double Glazed with Silicone Warm Edge Spacer	1" (25 mm) AIM between Metal Skins	Rigid Insulation

Nominal (1D) vs. Assembly Performance Indicators

Scenario	Insulation R-Value (RSI)	U_s Btu/ft^2 ·hr ·°F (W/m^2 K)	R_s ft^2·hr·°F / Btu (m^2 K / W)	U_g Btu/ft^2 ·hr ·°F (W/m^2 K)	R_g ft^2·hr·°F / Btu (m^2 K / W)	U_t[1] Btu/ft^2 ·hr ·°F (W/m^2 K)	R_t ft^2·hr·°F / Btu (m^2 K / W)
H1	R-29.3 (5.16)	0.103 (0.59)	R-9.7 (1.71)	0.366 (2.08)	R-2.7 (0.48)	0.236 (1.34)	R-4.2 (0.75)
H2	R-46.1 (8.12)	0.098 (0.56)	R-10.2 (1.79)	0.362 (2.06)	R-2.8 (0.49)	0.231 (1.31)	R-4.3 (0.76)
H3	R-39.1 (6.89)	0.060 (0.34)	R-16.6 (2.92)	0.378 (2.15)	R-2.6 (0.47)	0.221 (1.25)	R-4.5 (0.80)

Detail 3.2.5

Unitized Curtain Wall System with 4-Sided Structural Silicone Joints and 5' x 5' Spandrel Section – Insulated Backpan and Improved Glazing at Intermediate Floor Intersection

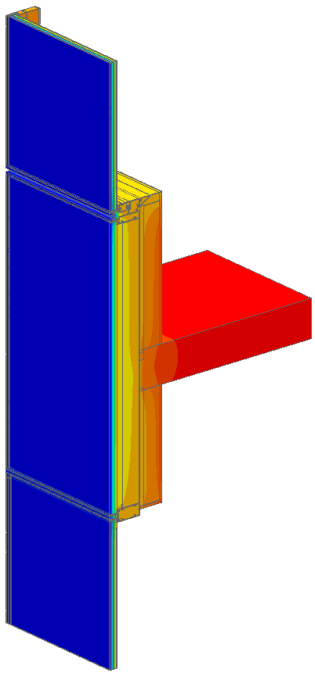

View from Exterior

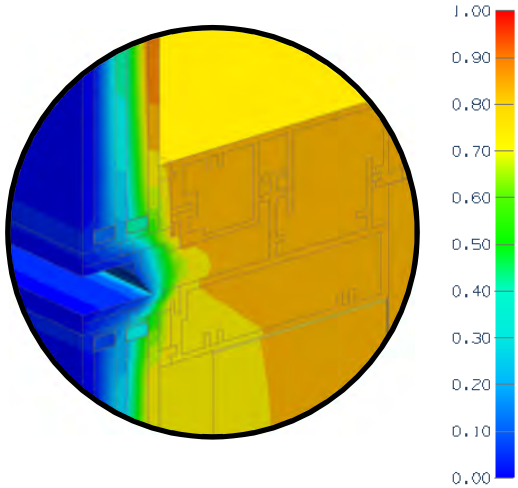

Mullion Detail

Thermal Performance Indicators

Transmittance / Resistance	U_s, R_s	Spandrel Section U-value and "Effective" R-value (including slab)
	U_g, R_g	Glazing U-value and "Effective" R-value
	U_t, R_t	Total Assembly U-value and "Effective" R-value

[1]U_t based on a window to wall ratio of 50%, but U_s is valid for all spandrel dimensions.

Scenario

Scenario	Vision Glass and Spacer	Insulation Thickness and Application
I0	Triple Glazed with Aluminum Spacer	4" (100 mm) Mineral Wool in Backpan

Nominal (1D) vs. Assembly Performance Indicators

Scenario	Insulation R-Value (RSI)	U_s Btu/ft^2 ·hr ·°F (W/m^2 K)	R_s ft^2·hr·°F / Btu (m^2 K / W)	U_g Btu/ft^2 ·hr ·°F (W/m^2 K)	R_g ft^2·hr·°F / Btu (m^2 K / W)	U_t[1] Btu/ft^2 ·hr ·°F (W/m^2 K)	R_t ft^2·hr·°F / Btu (m^2 K / W)
I0	R-16.8 (2.96)	0.213 (1.21)	R-4.7 (0.83)	0.238 (1.35)	R-4.2 (0.74)	0.226 (1.28)	R-4.4 (0.78)

Detail 3.2.6

Unitized Curtain Wall System with 4-Sided Structural Silicone Joints and 5' x 5' Spandrel Section – AIM Applications and Improved Glazing at Intermediate Floor Intersection

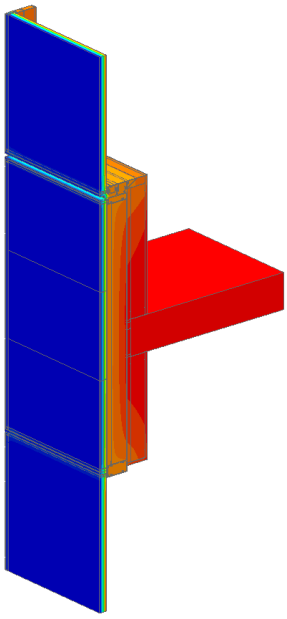

View from Exterior

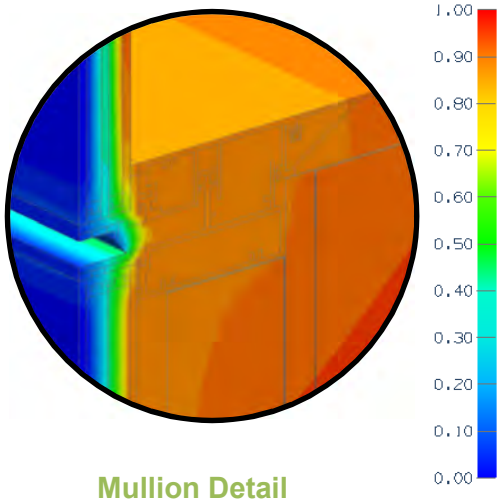

Mullion Detail

Thermal Performance Indicators

Transmittance / Resistance	U_s, R_s,	Spandrel Section U-value and "Effective" R-value (including slab)
	U_g, R_g	Glazing U-value and "Effective" R-value
	U_t, R_t	Total Assembly U-value and "Effective" R-value

[1]U_t based on a window to wall ratio of 50%, but U_s is valid for all spandrel dimensions.

AIM = Architectural Insulation Module

Scenarios

Scenario	Vision Glass and Spacer	Insulation Thickness and Application	AIM Spacer/Edge Condition
I1	Triple Glazed with Silicone Warm Edge Spacer	1.5" (38 mm) AIM between Glass + 4" (100 mm) Mineral Wool in Backpan	Silicone Warm Edge Spacer
I2	Triple Glazed with Silicone Warm Edge Spacer	Shadow AIM with 5/8" (16mm) AIM between Glass + 4" (100 mm) Mineral Wool in Backpan	Silicone Warm Edge Spacer

Nominal (1D) vs. Assembly Performance Indicators

Scenario	Insulation R-Value (RSI)	U_s Btu/ft^2 ·hr ·°F (W/m^2 K)	R_s ft^2·hr·°F / Btu (m^2 K / W)	U_g Btu/ft^2 ·hr ·°F (W/m^2 K)	R_g ft^2·hr·°F / Btu (m^2 K / W)	U_t[1] Btu/ft^2 ·hr ·°F (W/m^2 K)	R_t ft^2·hr·°F / Btu (m^2 K / W)
I1	R-75.4 (13.28)	0.068 (0.39)	R-14.7 (2.59)	0.242 (1.37)	R-4.1 (0.73)	0.156 (0.88)	R-6.4 (1.13)
I2	R-41.2 (7.26)	0.094 (0.53)	R-10.6 (1.87)	0.241 (1.37)	R-4.1 (0.73)	0.168 (0.96)	R-5.9 (1.05)

Detail 3.3.1

Unitized Curtain Wall System – Window Wall Transition

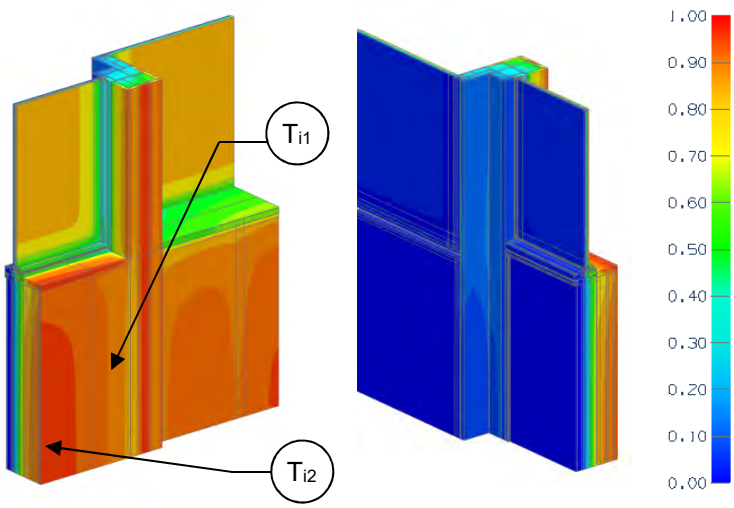

View from Interior View from Exterior

Thermal Performance Indicators

Assembly 1D (Nominal) R-Value	R_{1Dw}, R_{1Dcw}	Nominal thermal resistance of two base assemblies: w = window-wall R-3.7 (0.65 RSI) + backpan insulation cw= curtain-wall R-3.7 (0.65 RSI) + backpan insulation
Transmittance / Resistance without Anomaly	U_w, R_w, U_{cw}, R_{cw}, U_g	"clear wall" spandrel U- and R-value for the base assemblies g = glazing
Transmittance / Resistance	U, R	U and R-values for the assembly
Surface Temperature Index[1]	T_i	0 = exterior temperature 1 = interior temperature
Linear Transmittance	ψ	Incremental increase in transmittance per linear length of transition joint

[1]Assumptions and limitations for surface temperatures identified in ASHRAE 1365-RP

Nominal (1D) vs. Assembly Performance Indicators

Base Assembly – Window Wall

Backpan Insulation 1D R-Value (RSI)	R_{1Dw} ft²·hr·°F / Btu (m² K / W)	R_w ft²·hr·°F / Btu (m² K / W)	U_w Btu/ft² ·hr ·°F (W/m² K)
R-8.4 (1.48)	R-12.1 (2.13)	R-5.3 (0.94)	0.188 (1.07)
R-16.8 (2.96)	R-20.5 (3.61)	R-7.9 (1.39)	0.127 (0.72)

Base Assembly – Curtain Wall

Backpan Insulation 1D R-Value (RSI)	R_{1Dcw} ft²·hr·°F / Btu (m² K / W)	R_{cw} ft²·hr·°F / Btu (m² K / W)	U_{cw} Btu/ft² ·hr ·°F (W/m² K)
R-8.4 (1.48)	R-12.1 (2.13)	R-5.0 (0.88)	0.200 (1.140)
R-16.8 (2.96)	R-20.5 (3.61)	R-7.2 (1.27)	0.139 (0.787)

Transition Joint Linear Transmittance

Backpan Insulation 1D R-Value (RSI)	R ft²·hr·°F / Btu (m² K / W)	U Btu/ft² ·hr ·°F (W/m² K)	ψ Btu/ft ·hr·°F (W/m K)
R-8.4 (1.48)	R-2.7 (0.47)	0.327 (2.11)	0.120 (0.207)
R-16.8 (2.96)	R-2.9 (0.51)	0.347 (1.97)	0.125 (0.217)

Base Assembly – Glazing

$U_{centre\ of\ glass}$ Btu/ft² ·hr ·°F (W/m² K)	U_g Btu/ft² ·hr ·°F (W/m² K)
0.321 (1.82)	0.373 (2.12)

Temperature Indices

	R8.4	R16.8	
T_{i1}	0.61	0.69	Min T on backpan, along vertical mullion
T_{i2}	0.75	0.82	Max T on backpan, at centre of backpan

Detail 3.3.2

Unitized Curtain Wall System – Window Wall Transition with Foam Insulation

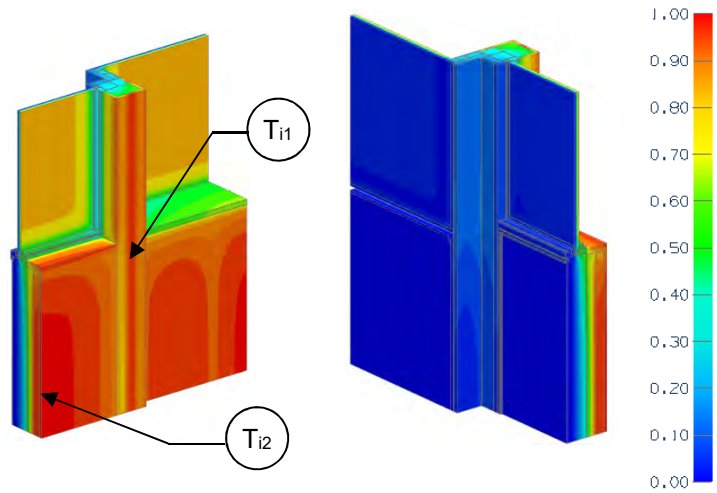

View from Interior View from Exterior

Thermal Performance Indicators

Assembly 1D (Nominal) R-Value	R_{1Dw}, R_{1Dcw}	Nominal thermal resistance of two base assemblies: w = window-wall R-15.7 (2.77 RSI) + backpan insulation cw= curtain-wall R-15.7 (2.77 RSI) + backpan insulation
Transmittance / Resistance without Anomaly	U_w, R_w, U_{cw}, R_{cw}, U_g	"clear wall" spandrel U- and R-value for the base assemblies g = glazing
Transmittance / Resistance	U, R	U and R-values for the assembly
Surface Temperature Index[1]	T_i	0 = exterior temperature 1 = interior temperature
Linear Transmittance	ψ	Incremental increase in transmittance per linear length of transition joint

[1]Assumptions and limitations for surface temperatures identified in ASHRAE 1365-RP

Nominal (1D) vs. Assembly Performance Indicators

Base Assembly – Window Wall

Backpan Insulation 1D R-Value (RSI)	R_{1Dw} ft²·hr·°F / Btu (m² K / W)	R_w ft²·hr·°F / Btu (m² K / W)	U_w Btu/ft² ·hr ·°F (W/m² K)
R-8.4 (1.48)	R-24.1 (4.24)	R-7.6 (1.33)	0.132 (0.75)
R-16.8 (2.96)	R-32.5 (5.72)	R-10.8 (1.90)	0.093 (0.53)

Base Assembly – Curtain Wall

Backpan Insulation 1D R-Value (RSI)	R_{1Dcw} ft²·hr·°F / Btu (m² K / W)	R_{cw} ft²·hr·°F / Btu (m² K / W)	U_{cw} Btu/ft² ·hr ·°F (W/m² K)
R-8.4 (1.48)	R-24.1 (4.24)	R-7.3 (1.28)	0.136 (0.78)
R-16.8 (2.96)	R-32.5 (5.72)	R-10.1 (1.78)	0.099 (0.56)

Transition Joint Linear Transmittance

Backpan Insulation 1D R-Value (RSI)	R ft²·hr·°F / Btu (m² K / W)	U Btu/ft² ·hr ·°F (W/m² K)	ψ Btu/ft ·hr·°F (W/m K)
R-8.4 (1.48)	R-2.7 (0.47)	0.327 (2.11)	0.334 (0.578)
R-16.8 (2.96)	R-2.9 (0.51)	0.347 (1.97)	0.294 (0.509)

Base Assembly – Glazing

$U_{centre\ of\ glass}$ Btu/ft² ·hr ·°F (W/m² K)	U_g Btu/ft² ·hr ·°F (W/m² K)
0.321 (1.82)	0.373 (2.12)

Temperature Indices

	R8.4	R16.8	
T_{i1}	0.90	0.91	Min T on sprayfoam, along vertical mullion
T_{i2}	0.91	0.92	Max T on sprayfoam, at centre of backpan

4.0 High Performance Curtain Wall

Detail 4.1.1 ..... **B.4.1**

High Performance Curtain Wall System – Spandrel Clear Wall & No Interior Stud Cavity Insulation

Detail 4.1.2 ..... **B.4.2**

High Performance Curtain Wall System – Spandrel Clear Wall & Interior Sprayfoam Insulation

Detail 4.2.1 ..... **B.4.3**

High Performance Curtain Wall System – Intermediate Floor Intersection & No Interior Stud Cavity Insulation

Detail 4.2.2 ..... **B.4.4**

High Performance Curtain Wall System – Intermediate Floor Intersection & Interior Sprayfoam Insulation

Detail 4.2.3 ..... **B.4.5**

High Performance Curtain Wall System with Vertical and Horizontal Pressure Plates and 5’ x 5’ Spandrel Section – Insulated Backpan and Intermediate Floor Intersection

Detail 4.2.4 ..... **B.4.6**

High Performance Curtain Wall System with Vertical and Horizontal Pressure Plates and 5’ x 5’ Spandrel Section – AIM Applications and Intermediate Floor Intersection

Detail 4.2.5 ..... **B.4.7**

High Performance Curtain Wall System with Vertical and Horizontal Pressure Plates, Intermediate Mullion and 5’ x 5’ Spandrel Section – Insulated Backpan and Intermediate Floor Intersection

Detail 4.2.6 ..... **B.4.8**

High Performance Curtain Wall System with Vertical and Horizontal Pressure Plates, Intermediate Mullion and 5’ x 5’ Spandrel Section – AIM Applications and Intermediate Floor Intersection

Detail 4.1.1

High Performance Curtain Wall System – Spandrel Clear Wall & No Interior Stud Cavity Insulation

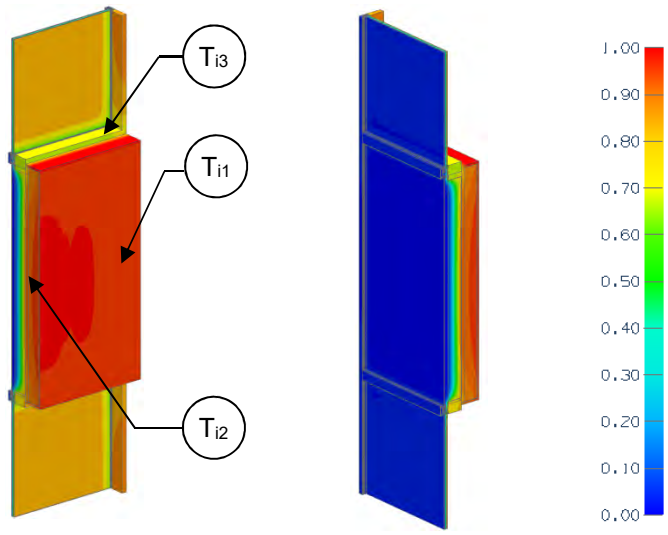

View from Interior View from Exterior

Thermal Performance Indicators

Assembly 1D (Nominal) R-Value	R_{1D}	R-3.7 (0.65 RSI) + backpan insulation
Transmittance / Resistance	U_w, R_w U_g	U-value and R-value for w = spandrel wall g = glazing, including framing
Transmittance / Resistance	U, R	U- and R-values for overall assembly
Surface Temperature Index[1]	T_i	0 = exterior temperature 1 = interior temperature

[1]Assumptions and limitations for surface temperatures identified in ASHRAE 1365-RP

Nominal (1D) vs. Assembly Performance Indicators

Spandrel Section

Backpan Insulation 1D R-Value (RSI)	R_{1D} ft²·hr·°F / Btu (m² K / W)	R_w ft²·hr·°F / Btu (m² K / W)	U_w Btu/ft² ·hr ·°F (W/m² K)
R-8.4 (1.48)	R-12.1 (2.13)	R-4.2 (0.74)	0.237 (1.35)
R-16.8 (2.96)	R-20.5 (3.61)	R-6.9 (1.22)	0.144 (0.82)

Glazing

$U_{centre\ of\ glass}$ Btu/ft² ·hr ·°F (W/m² K)	U_g Btu/ft² ·hr ·°F (W/m² K)
0.321 (1.82)	0.373 (2.12)

Combined Assembly

Backpan Insulation 1D R-Value (RSI)	R ft²·hr·°F / Btu (m² K / W)	U Btu/ft² ·hr ·°F (W/m² K)
R-8.4 (1.48)	R-3.3 (0.58)	0.302 (1.72)
R-16.8 (2.96)	R-3.9 (0.68)	0.259 (1.47)

Temperature Indices

	R8.4	R16.8	
T_{i1}	0.51	0.69	Min T on backpan, at edge of backpan
T_{i2}	0.80	0.87	Max T on backpan, at centre of backpan
T_{i3}	0.50	0.56	Min T on frame, at corner of glazing

Detail 4.1.2

High Performance Curtain Wall System – Spandrel Clear Wall & Interior Sprayfoam Insulation

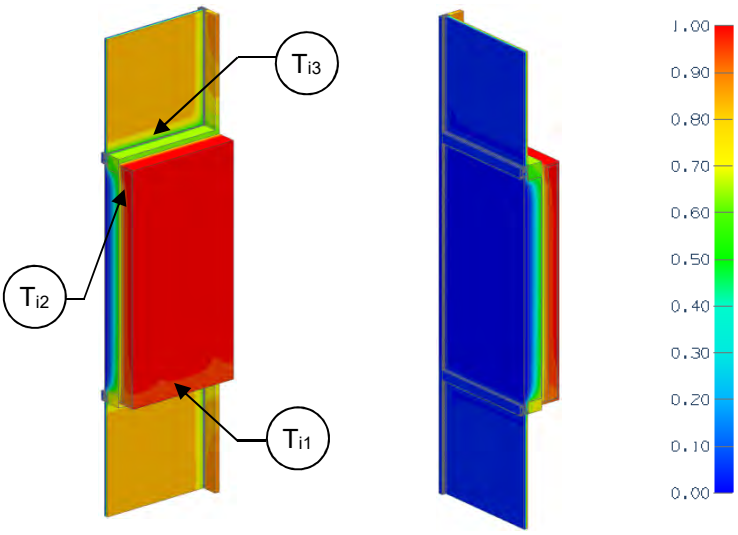

View from Interior View from Exterior

Thermal Performance Indicators

Assembly 1D (Nominal) R-Value	R_{1D}	R-15.7 (2.77 RSI) + backpan insulation
Transmittance / Resistance	U_w, R_w U_g	U-value and R-value for w = spandrel wall g = glazing, including framing
Transmittance / Resistance	U, R	U- and R-values for overall assembly
Surface Temperature Index[1]	T_i	0 = exterior temperature 1 = interior temperature

[1]Assumptions and limitations for surface temperatures identified in ASHRAE 1365-RP

Nominal (1D) vs. Assembly Performance Indicators

Spandrel Section

Backpan Insulation 1D R-Value (RSI)	R_{1D} ft²·hr·°F / Btu (m² K / W)	R_w ft²·hr·°F / Btu (m² K / W)	U_w Btu/ft² ·hr ·°F (W/m² K)
R-8.4 (1.48)	R-24.1 (4.24)	R-6.0 (1.05)	0.168 (0.95)
R-16.8 (2.96)	R-32.5 (5.72)	R-8.9 (1.56)	0.113 (0.64)

Glazing

$U_{centre\ of\ glass}$ Btu/ft² ·hr ·°F (W/m² K)	U_g Btu/ft² ·hr ·°F (W/m² K)
0.321 (1.82)	0.367 (2.08)

Combined Assembly

Backpan Insulation 1D R-Value (RSI)	R ft²·hr·°F / Btu (m² K / W)	U Btu/ft² ·hr ·°F (W/m² K)
R-8.4 (1.48)	R-3.8 (0.67)	0.264 (1.50)
R-16.8 (2.96)	R-4.2 (0.73)	0.24 (1.36)

Temperature Indices

	R8.4	R16.8	
T_{i1}	0.74	0.81	Min T on spray foam, at bottom of spandrel
T_{i2}	0.94	0.95	Max T on spray foam, at top of spandrel, away from frame and studs
T_{i3}	0.44	0.50	Min T on frame, at corner of glazing

Detail 4.2.1

High Performance Curtain Wall System – Intermediate Floor Intersection & No Interior Stud Cavity Insulation

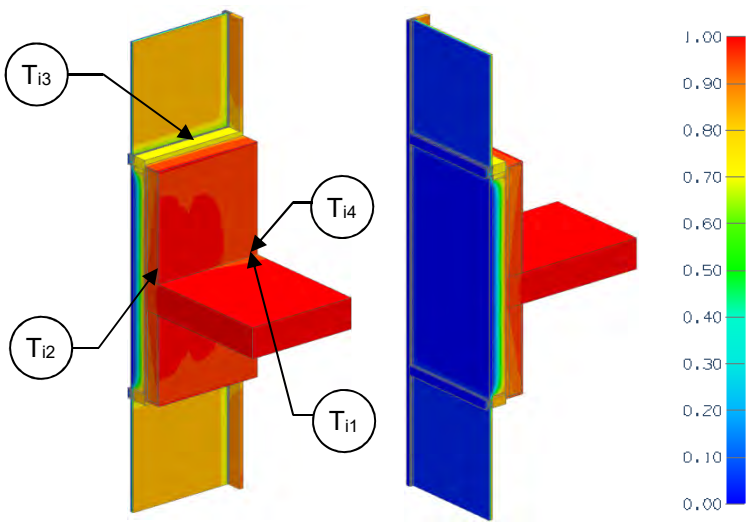

View from Interior View from Exterior

Thermal Performance Indicators

Assembly 1D (Nominal) R-Value	R_{1D}	R-3.7 (0.65 RSI) + backpan insulation
Transmittance / Resistance without Anomaly	U_w, R_w U_g,	"clear wall" U- and R-value, w = spandrel wall without slab g = glazing
Transmittance / Resistance	U_s, R_s, U_t, R_t	U and R-values for s = spandrel with slab t = combined glazing and spandrel with slab
Surface Temperature Index[1]	T_i	0 = exterior temperature 1 = interior temperature
Linear Transmittance	ψ	Incremental increase in transmittance per linear length of slab

[1]Assumptions and limitations for surface temperatures identified in ASHRAE 1365-RP

[2]Spandrel section includes interface with slab and vision glazing

Nominal (1D) vs. Assembly Performance Indicators

Base Assembly - Spandrel Section Only

Backpan Insulation 1D R-Value (RSI)	R_{1D} ft²·hr·°F / Btu (m² K / W)	R_w ft²·hr·°F / Btu (m² K / W)	U_w Btu/ft² ·hr ·°F (W/m² K)
R-8.4 (1.48)	R-12.1 (2.13)	R-4.2 (0.74)	0.237 (1.35)
R-16.8 (2.96)	R-20.5 (3.61)	R-6.9 (1.22)	0.144 (0.82)

Base Assembly - Glazing

$U_{centre\ of\ glass}$ Btu/ft² ·hr ·°F (W/m² K)	U_g Btu/ft² ·hr ·°F (W/m² K)
0.321 (1.82)	0.373 (2.12)

Slab Linear Transmittance

Backpan Insulation 1D R-Value (RSI)	R_t ft²·hr·°F / Btu (m² K / W)	U_t Btu/ft² ·hr ·°F (W/m² K)	ψ Btu/ft ·hr·°F (W/m K)
R-8.4 (1.48)	R-3.3 (0.58)	0.306 (1.74)	0.037 (0.064)
R-16.8 (2.96)	R-3.8 (0.68)	0.260 (1.48)	0.016 (0.028)

Spandrel Section with Slab[2]

R_s ft²·hr·°F / Btu (m² K / W)	U_s Btu/ft² ·hr ·°F (W/m² K)
R-4.1 (0.72)	0.244 (1.39)
R-6.8 (1.20)	0.147 (0.83)

Temperature Indices

	R8.4	R16.8	
T_{i1}	0.53	0.71	Min T on backpan, at anchor
T_{i2}	0.81	0.88	Max T on backpan, at centre of backpan above slab
T_{i3}	0.51	0.57	Min T on frame, along edge of glazing
T_{i4}	0.55	0.71	Min T on slab anchor

Detail 4.2.2

High Performance Curtain Wall System – Intermediate Floor Intersection & Interior Sprayfoam Insulation

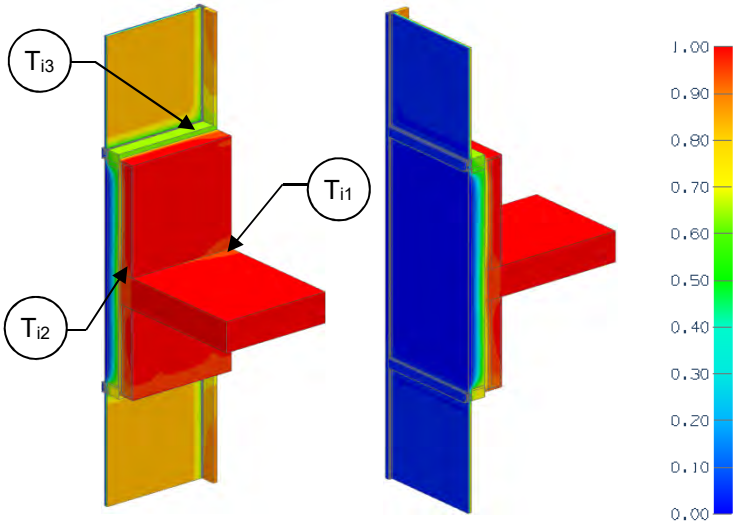

View from Interior View from Exterior

Thermal Performance Indicators

Assembly 1D (Nominal) R-Value	R_{1D}	R-15.7 (2.77 RSI) + backpan insulation
Transmittance / Resistance without Anomaly	U_w, R_w, U_g	"clear wall" U- and R-value, w = spandrel wall without slab g = glazing
Transmittance / Resistance	U_s, R_s, U_t, R_t	U and R-values for s = spandrel with slab t = combined glazing and spandrel with slab
Surface Temperature Index[1]	T_i	0 = exterior temperature 1 = interior temperature
Linear Transmittance	ψ	Incremental increase in transmittance per linear length of slab

[1]Assumptions and limitations for surface temperatures identified in ASHRAE 1365-RP
[2]Spandrel section includes interface with slab and vision glazing

Nominal (1D) vs. Assembly Performance Indicators

Base Assembly - Spandrel Section Only

Backpan Insulation 1D R-Value (RSI)	R_{1D} ft²·hr·°F / Btu (m² K / W)	R_w ft²·hr·°F / Btu (m² K / W)	U_w Btu/ft² ·hr ·°F (W/m² K)
R-8.4 (1.48)	R-24.1 (4.24)	R-6.0 (1.05)	0.168 (0.95)
R-16.8 (2.96)	R-32.5 (5.72)	R-8.9 (1.56)	0.113 (0.64)

Base Assembly - Glazing

$U_{centre\ of\ glass}$ Btu/ft² ·hr ·°F (W/m² K)	U_g Btu/ft² ·hr ·°F (W/m² K)
0.321 (1.82)	0.367 (2.08)

Slab Linear Transmittance

Backpan Insulation 1D R-Value (RSI)	R_t ft²·hr·°F / Btu (m² K / W)	U_t Btu/ft² ·hr ·°F (W/m² K)	ψ Btu/ft ·hr·°F (W/m K)
R-8.4 (1.48)	R-3.7 (0.64)	0.274 (1.55)	0.093 (0.161)
R-16.8 (2.96)	R-4.1 (0.72)	0.245 (1.39)	0.050 (0.087)

Spandrel Section with Slab[2]

R_s ft²·hr·°F / Btu (m² K / W)	U_s Btu/ft² ·hr ·°F (W/m² K)
R-5.4 (0.95)	0.186 (1.05)
R-8.2 (1.45)	0.122 (0.69)

Temperature Indices

	R8.4	R16.8	
T_{i1}	0.68	0.77	Min T on spray foam, around slab anchor
T_{i2}	0.95	0.96	Max T on spray foam, at top of spandrel, away from frame and studs
T_{i3}	0.45	0.51	Min T on frame, along edge of glazing

Detail 4.2.3

High Performance Curtain Wall System with Vertical and Horizontal Pressure Plates and 5' x 5' Spandrel Section – Insulated Backpan and Intermediate Floor Intersection

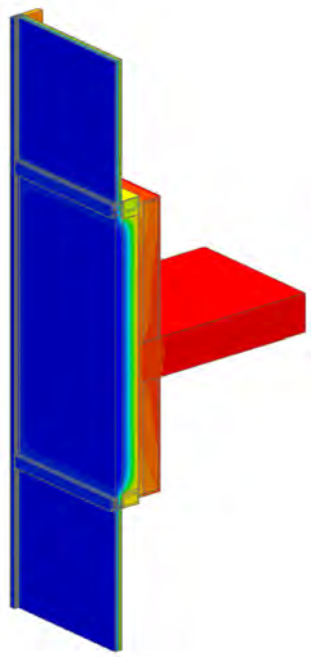

View from Exterior

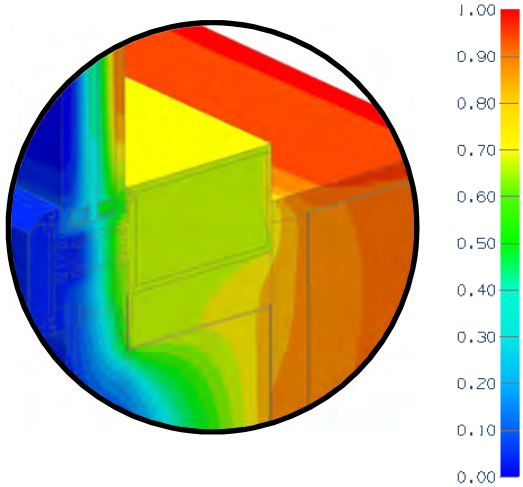

Mullion Detail

Thermal Performance Indicators

Transmittance / Resistance	U_s, R_s	Spandrel Section U-value and "Effective" R-value (including slab)
	U_g, R_g	Glazing U-value and "Effective" R-value
	U_t, R_t	Total Assembly U-value and "Effective" R-value

[1]U_t based on a window to wall ratio of 50%, but U_s is valid for all spandrel dimensions.

Scenario

Scenario	Vision Glass and Spacer	Insulation Thickness and Application
E0	Triple Glazed with Aluminum Spacer	4" (100 mm) Mineral Wool in Backpan

Nominal (1D) vs. Assembly Performance Indicators

Scenario	Insulation R-Value (RSI)	U_s Btu/ft^2 ·hr ·°F (W/m^2 K)	R_s ft^2·hr·°F / Btu (m^2 K / W)	U_g Btu/ft^2 ·hr ·°F (W/m^2 K)	R_g ft^2·hr·°F / Btu (m^2 K / W)	U_t[1] Btu/ft^2 ·hr ·°F (W/m^2 K)	R_t ft^2·hr·°F / Btu (m^2 K / W)
E0	R-16.8 (2.96)	0.156 (0.89)	R-6.4 (1.13)	0.238 (1.35)	R-4.2 (0.74)	0.197 (1.12)	R-5.1 (0.89)

Detail 4.2.4

High Performance Curtain Wall System with Vertical and Horizontal Pressure Plates and 5' x 5' Spandrel Section – AIM Applications and Intermediate Floor Intersection

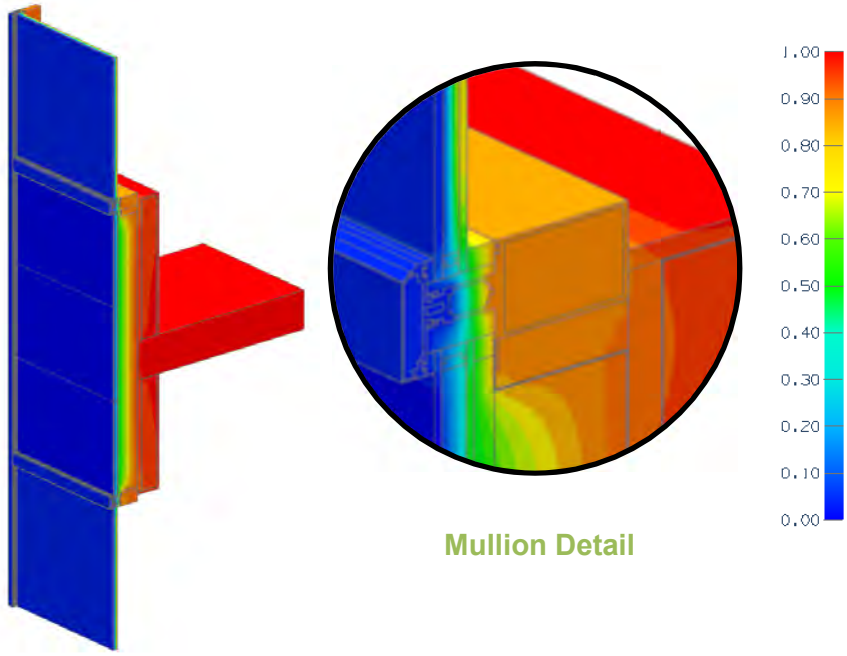

Mullion Detail

View from Exterior

Thermal Performance Indicators

Transmittance / Resistance	U_s, R_s	Spandrel Section U-value and "Effective" R-value (including slab)
	U_g, R_g	Glazing U-value and "Effective" R-value
	U_t, R_t	Total Assembly U-value and "Effective" R-value

[1]U_t based on a window to wall ratio of 50%, but U_s is valid for all spandrel dimensions.

AIM = Architectural Insulation Module

Scenarios

Scenario	Vision Glass and Spacer	Insulation Thickness and Application	AIM Spacer/Edge Condition
E1	Double Glazed with Silicone Warm Edge Spacer	0.75" (19 mm) AIM between Glass + 4" (100 mm) Mineral Wool in Backpan	Silicone Warm Edge Spacer
E2	Double Glazed with Silicone Warm Edge Spacer	1.5" (38 mm) AIM between Glass + 4" (100 mm) Mineral Wool in Backpan	Silicone Warm Edge Spacer
E3	Triple Glazed with Silicone Warm Edge Spacer	1.5" (38 mm) AIM between Glass + 4" (100 mm) Mineral Wool in Backpan	Silicone Warm Edge Spacer
E4	Triple Glazed with Silicone Warm Edge Spacer	Shadow AIM with 5/8" (16mm) AIM in Secondary Unit + 4" (100 mm) Mineral Wool in Backpan	Silicone Warm Edge Spacer

Nominal (1D) vs. Assembly Performance Indicators

Scenario	Insulation R-Value (RSI)	U_s Btu/ft^2 ·hr ·°F (W/m^2 K)	R_s ft^2·hr·°F / Btu (m^2 K / W)	U_g Btu/ft^2 ·hr ·°F (W/m^2 K)	R_g ft^2·hr·°F / Btu (m^2 K / W)	U_t[1] Btu/ft^2 ·hr ·°F (W/m^2 K)	R_t ft^2·hr·°F / Btu (m^2 K / W)
E1	R-46.1 (8.12)	0.086 (0.49)	R-11.7 (2.06)	0.359 (2.04)	R-2.8 (0.49)	0.222 (1.26)	R-4.5 (0.79)
E2	R-75.4 (13.28)	0.075 (0.43)	R-13.3 (2.34)	0.361 (2.05)	R-2.8 (0.49)	0.218 (1.24)	R-4.6 (0.81)
E3	R-75.4 (13.28)	0.072 (0.41)	R-13.8 (2.43)	0.240 (1.36)	R-4.2 (0.73)	0.156 (0.89)	R-6.4 (1.13)
E4	R-41.2 (7.26)	0.090 (0.51)	R-11.2 (1.96)	0.229 (1.30)	R-4.4 (0.77)	0.159 (0.90)	R-6.3 (1.11)

Detail 4.2.5

High Performance Curtain Wall System with Vertical and Horizontal Pressure Plates, Intermediate Mullion and 5' x 5' Spandrel Section – Insulated Backpan and Intermediate Floor Intersection

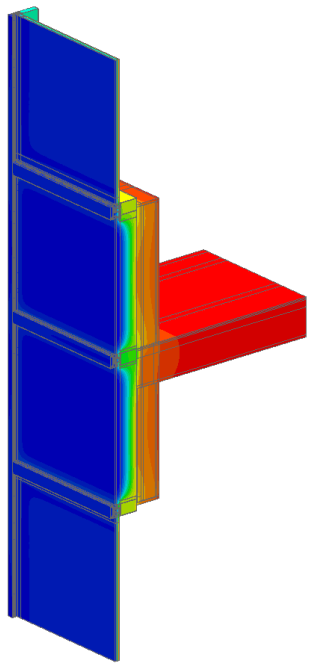

View from Exterior

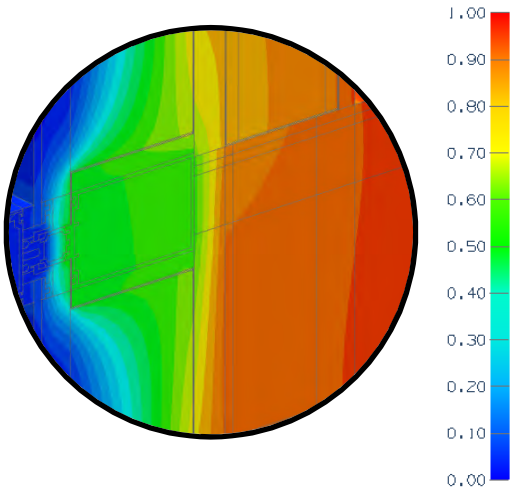

Mullion Detail

Thermal Performance Indicators

Transmittance / Resistance	U_s, R_s	Spandrel Section U-value and "Effective" R-value (including slab)
	U_g, R_g	Glazing U-value and "Effective" R-value
	U_t, R_t	Total Assembly U-value and "Effective" R-value

[1]U_t based on a window to wall ratio of 50%, but U_s is valid for all spandrel dimensions.

Scenario

Scenario	Vision Glass and Spacer	Insulation Thickness and Application
F0	Double Glazed with Silicone Warm Edge Spacer	4" (100 mm) Mineral Wool in Backpan

Nominal (1D) vs. Assembly Performance Indicators

Scenario	Insulation R-Value (RSI)	U_s Btu/ft^2 ·hr ·°F (W/m^2 K)	R_s ft^2·hr·°F / Btu (m^2 K / W)	U_g Btu/ft^2 ·hr ·°F (W/m^2 K)	R_g ft^2·hr·°F / Btu (m^2 K / W)	U_t[1] Btu/ft^2 ·hr ·°F (W/m^2 K)	R_t ft^2·hr·°F / Btu (m^2 K / W)
F0	R-16.8 (2.96)	0.204 (1.16)	R-4.9 (0.86)	0.357 (2.03)	R-2.8 (0.49)	0.281 (1.59)	R-3.6 (0.63)

Detail 4.2.6

High Performance Curtain Wall System with Vertical and Horizontal Pressure Plates, Intermediate Mullion and 5' x 5' Spandrel Section – AIM Applications and Intermediate Floor Intersection

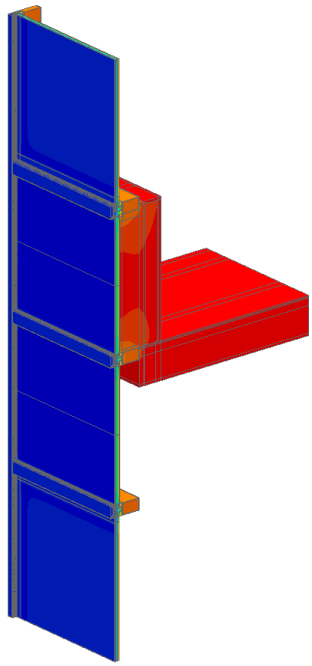

View from Exterior

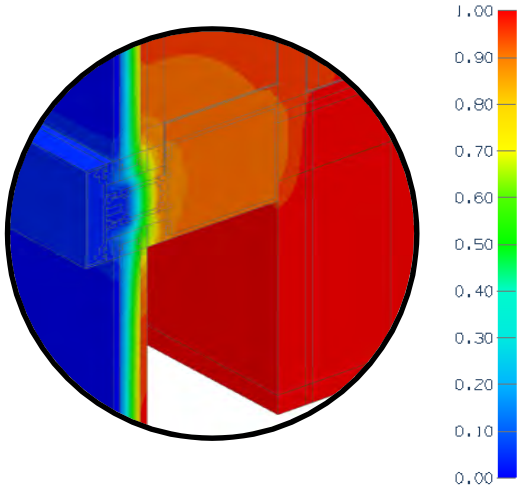

Mullion Detail

Thermal Performance Indicators

Transmittance / Resistance	U_s, R_s,	Spandrel Section U-value and "Effective" R-value (including slab)
	U_g, R_g	Glazing U-value and "Effective" R-value
	U_t, R_t	Total Assembly U-value and "Effective" R-value

[1]U_t based on a window to wall ratio of 50%, but U_s is valid for all spandrel dimensions.

AIM = Architectural Insulation Module

Scenarios

Scenario	Vision Glass and Spacer	Insulation Thickness and Application	AIM Spacer/Edge Condition
F1	Double Glazed with Silicone Warm Edge Spacer	0.75" (19 mm) AIM between Glass	Silicone Warm Edge Spacer
F2	Double Glazed with Silicone Warm Edge Spacer	1" (25mm) AIM between Metal Skins	Rigid Insulation
F3	Triple Glazed with Silicone Warm Edge Spacer	1.5" (38 mm) AIM between Glass	Silicone Warm Edge Spacer

Nominal (1D) vs. Assembly Performance Indicators

Scenario	Insulation R-Value (RSI)	U_s Btu/ft^2 ·hr ·°F (W/m^2 K)	R_s ft^2·hr·°F / Btu (m^2 K / W)	U_g Btu/ft^2 ·hr ·°F (W/m^2 K)	R_g ft^2·hr·°F / Btu (m^2 K / W)	U_t[1] Btu/ft^2 ·hr ·°F (W/m^2 K)	R_t ft^2·hr·°F / Btu (m^2 K / W)
F1	R-29.3 (5.16)	0.141 (0.80)	R-7.1 (1.25)	0.361 (2.05)	R-2.8 (0.49)	0.251 (1.43)	R-4.0 (0.70)
F2	R-39.1 (6.89)	0.112 (0.63)	R-8.9 (1.57)	0.357 (2.03)	R-2.8 (0.49)	0.234 (1.33)	R-4.3 (0.75)
F3	R-58.6 (10.32)	0.098 (0.55)	R-10.2 (1.80)	0.220 (1.25)	R-4.5 (0.80)	0.159 (0.90)	R-6.3 (1.11)

5.0 Steel-Frame Construction

Detail 5.1.1 ..... B.5.1

Interior Insulated 3 5/8” x 1 5/8” Steel Stud Wall Assembly – Clear Wall

Detail 5.1.2 ..... B.5.2

Interior Insulated 6” x 1 5/8” Steel Stud Wall Assembly – Clear Wall

Detail 5.1.3 ..... B.5.3

Exterior Insulated 3 5/8” x 1 5/8” Steel Stud (16” o.c.) Drained EIFS Wall Assembly – Clear Wall

Detail 5.1.4 ..... B.5.4

Exterior and Interior Insulated 3 5/8” x 1 5/8” Steel Stud (16” o.c.) Drained EIFS Wall Assembly – Clear Wall

Detail 5.1.5 ..... B.5.5

Exterior Insulated 3 5/8″ x 1 5/8″ Steel Stud (16″ o.c.) Wall Assembly with Vertical Z-Girts (16″ o.c.) Supporting Metal Cladding – Clear Wall

Detail 5.1.6 ..... B.5.6

Exterior and Interior Insulated 6″ x 1 5/8″ Steel Stud (16″ o.c.) Wall Assembly with Vertical Z-Girts (16″ o.c.) Supporting Metal Cladding – Clear Wall

Detail 5.1.7 ..... B.5.7

Exterior and Interior Insulated 6” x 1 5/8” Steel Stud (16” o.c.) Wall Assembly with Vertical Z-Girts (16” o.c.) – Clear Wall

Detail 5.1.8 ..... B.5.8

Exterior and Interior Insulated 6” x 1 5/8” Steel Stud (16” o.c.) Wall Assembly with Vertical Z-Girts (16” o.c.) – Clear Wall

Detail 5.1.9 ..... B.5.9

Exterior Insulated 3 5/8″ x 1 5/8″ Steel Stud (16″ O.C.) Wall Assembly with Horizontal Z-Girts (24″ O.C.) Supporting Metal Cladding – Clear Wall

Detail 5.1.10 ..... B.5.10

Exterior and Interior Insulated 6” x 1 /58” Steel Stud (16” o.c.) Wall Assembly with Horizontal Z-Girts (24” o.c.) Supporting Cladding, Owens Corning ThermaFiber RainBarrier HC Max Insulation and R-20 Batt Insulation in Stud Cavity – Clear Wall

Detail 5.1.11 ..... B.5.11

Exterior and Interior Insulated 6” x 1 5/8” Steel Stud (16” o.c.) Wall Assembly with Horizontal Z-Girts (24” o.c.) Supporting Cladding, Owens Corning ThermaFiber RainBarrier HC Plus 110 Insulation and R-20 Batt Insulation in Stud Cavity – Clear Wall

Detail 5.1.12 ..... B.5.12

Exterior and Interior Insulated 6” x 1 5/8” Steel Stud (16” o.c.) Wall Assembly with Horizontal Z-Girts (24” o.c.) Supporting Cladding, Owens Corning ThermaFiber RainBarrier 45 Insulation and R-20 Batt Insulation in Stud Cavity – Clear Wall

Detail 5.1.13 ..... B.5.13

Exterior and Interior Insulated 3 5/8” x 1 5/8” Steel Stud (16” o.c.) Wall Assembly with Vertical Z-girts (16” o.c.) Supporting Stucco Cladding – Clear Wall

Detail 5.1.14 ..... B.5.14

Exterior and Interior Insulated 3 5/8″ x 1 5/8″ Steel Stud (16″ o.c) Wall Assembly with Horizontal Z-Girts (24″ o.c.) Supporting Metal Cladding – Clear Wall

Detail 5.1.15 ..... B.5.15

Exterior and Interior Insulated 6” x 1 5/8” Steel Stud (16” o.c.) Wall Assembly with Horizontal Z-Girts (24” o.c.) – Clear Wall

Detail 5.1.16 ..... B.5.16

Exterior Insulated 3 5/8″ x 1 5/8″ Steel Stud (16″ O.C.) Wall Assembly with Vertical Z-Girts (24″ O.C.) & Horizontal Z-Girts (24″ O.C.) Supporting Metal Cladding – Clear Wall

Detail 5.1.17 ..... B.5.17

Exterior Insulated 3 5/8″ x 1 5/8″ Steel Stud (16″ O.C.) Wall Assembly with Intermittent Vertical Z-Girts (16″ O.C.) Supporting Metal Cladding – Clear Wall

Detail 5.1.18 ..... B.5.18

Exterior Insulated 3 5/8” x 1 5/8” Steel Stud (16” o.c.) Wall Assembly with Horizontal Clips (24” o.c.) Supporting Metal Cladding – Clear Wall

Detail 5.1.19 ..... B.5.19

Exterior and Interior Insulated 3 5/8” x 1 5/8” Steel Stud (16” o.c.) Wall Assembly with Horizontal Clips (24” o.c.) Supporting Metal Cladding – Clear Wall

Detail 5.1.20 ..... B.5.20

Exterior and Interior Insulated 3 5/8” x 1 5/8” Steel Stud (16” o.c.) Wall Assembly with Vertical Z Clips (16” o.c.) Supporting Stucco Cladding – Clear Wall

Detail 5.1.21 ..... B.5.21

Exterior Insulated 6” x 1 5/8” Steel Stud (16” o.c.) Wall Assembly with Knight MFI-System (24” o.c.) Supporting Cladding – Clear Wall

Detail 5.1.22 ..... B.5.22

Exterior and Interior Insulated 6” x 1 5/8” Steel Stud (16” o.c.) Wall Assembly with Knight MFI-System (24” o.c.) Supporting Cladding – Clear Wall

Detail 5.1.23 ..... B.5.23

Exterior Insulated 3 5/8” x 1 5/8” Steel Stud (16” o.c.) Wall Assembly with CL-Talon 300 Clip System Supporting Cladding – Clear Wall

Detail 5.1.24 ..... B.5.24

Exterior Insulated 3 5/8’’ x 1 5/8’’ Steel Stud (16’’ o.c.) Wall Assembly with Thermally Isolated Aluminum Clip Horizontal Sub-girt System Supporting Cladding – Clear Wall

Detail 5.1.25 ..... B.5.25

Exterior Insulated 3 5/8” x 1/58” Steel Stud (16”o.c.) Wall Assembly with Fiber Reinforced Girts (TAC) Supporting Cladding – Clear Wall

Detail 5.1.26 ..... B.5.26

Exterior Insulated 3 5/8” x 1 5/8” Steel Stud (16” o.c.) Wall Assembly with Thermally Broken Aluminum Clip Rail System (24” o.c.) Supporting Cladding – Clear Wall

Detail 5.1.27 ..... B.5.27

Exterior and Interior Insulated 6” x 1 5/8” Steel Stud (16” o.c.) Wall Assembly with High Compression Insulation and Through Insulation Steel Fasteners (12” o.c.) Supporting Cladding, Owens Corning ThermaFiber RainBarrier HC Max Insulation and R-20 Batt Insulation in Stud Cavity – Clear Wall

Detail 5.1.28 ..... B.5.28

Exterior and Interior Insulated 6” x 1 5/8” Steel Stud (16” o.c.) Wall Assembly with High Compression Insulation and Through Insulation Steel Fasteners (12” o.c.) Supporting Cladding, Owens Corning ThermaFiber RainBarrier HC Plus 110 Insulation and R-20 Batt Insulation in Stud Cavity – Clear Wall

Detail 5.1.29 ..... B.5.29

Exterior and Interior Insulated 6” 1 5/8” Steel Stud (16” o.c.) Wall Assembly with High Compression Insulation and Through Insulation Steel Fasteners (12” o.c.) Supporting Cladding, Owens Corning ThermaFiber RainBarrier 45 Insulation and R-20 Batt Insulation in Stud Cavity – Clear Wall

Detail 5.1.30 ..... B.5.30

Exterior and Interior Insulated 6” x 1 5/8” Steel Stud (16” o.c.) Wall Assembly with High Compression Insulation and Through Insulation Steel Fasteners (12” o.c.) Supporting Cladding, Owens Corning ThermaFiber RainBarrier HC Max Insulation and R-22 Batt Insulation in Stud Cavity – Clear Wall

Detail 5.1.31 ..... B.5.31

Exterior and Interior Insulated 6” x 1 5/8” Steel Stud (16” o.c.) Wall Assembly with High Compression Insulation and Through Insulation Steel Fasteners (12” o.c.) Supporting Cladding, Owens Corning ThermaFiber RainBarrier HC Plus 110 Exterior Insulation and R-22 Batt Insulation in Stud Cavity – Clear Wall

Detail 5.1.32 ..... B.5.32

Exterior and Interior Insulated 6” x 1 5/8” Steel Stud (16” o.c.) Wall Assembly with High Compression Insulation and Through Insulation Steel Fasteners (12” o.c.) Supporting Cladding, Owens Corning ThermaFiber RainBarrier 45 Insulation and R-22 Batt Insulation in Stud Cavity – Clear Wall

Detail 5.1.33 ..... B.5.33

Exterior and Interior Insulated 6” x 1 5/8” Steel Stud (16” o.c.) Wall Assembly with High Compression Insulation and Through Insulation Steel Fasteners (12” o.c.) Supporting Cladding, Owens Corning ThermaFiber RainBarrier HC Max Insulation and R-24 Batt Insulation in Stud Cavity – Clear Wall

Detail 5.1.34 ..... B.5.34

Exterior and Interior Insulated 6” x 1 5/8” Steel Stud (16” o.c.) Wall Assembly with High Compression Insulation and Through Insulation Steel Fasteners (12” o.c.)

Supporting Cladding, Owens Corning ThermaFiber RainBarrier HC Plus 110 Exterior Insulation and R-24 Batt Insulation in Stud Cavity – Clear Wall

Detail 5.1.35 ..... B.5.35

Exterior and Interior Insulated 6” x 1 5/8” Steel Stud (16” o.c.) Wall Assembly with High Compression Insulation and Through Insulation Steel Fasteners (12” o.c.) Supporting Cladding, Owens Corning ThermaFiber RainBarrier 45 Insulation and R-24 Batt Insulation in Stud Cavity – Clear Wall

Detail 5.1.36 ..... B.5.36

Exterior and Interior Insulated 6” x 1 5/8” Steel Stud (16” o.c.) Wall Assembly with Knight CI-System (8” o.c.) – Clear Wall

Detail 5.1.37 ..... B.5.37

Exterior and Interior Insulated 6” x 1 5/8” Steel Stud (16” o.c.) Wall Assembly with Knight CI-System (16” o.c.) – Clear Wall

Detail 5.1.38 ..... B.5.38

Exterior Insulated 6” x 1 5/8” Steel Stud (16” o.c.) Wall Assembly with Knight CI-System (8” o.c.) – Clear Wall

Detail 5.1.39 ..... B.5.39

Exterior Insulated 3 5/8” x 1 5/8” Steel Stud (16” o.c.) Wall Assembly with R-TEC CI Bracket System Supporting Vertical Sub-girts – Clear Wall

Detail 5.1.40 ..... B.5.40

Interior and Exterior Insulated 3 5/8” x 1 5/8” Steel Stud (16” o.c.) Wall Assembly with R-TEC CI Bracket System Supporting Vertical Sub-girts – Clear Wall

Detail 5.1.41 ..... B.5.41

Exterior Insulated 3 5/8” x 1 5/8” Steel Stud (16” o.c.) Wall Assembly with Thermally Broken ISO Clip System Supporting Vertical Sub-girts – Clear Wall

Detail 5.1.42 ..... B.5.42

Exterior Insulated 3 5/8” x 1 5/8” Steel Stud (16” o.c.) Wall Assembly with Thermally Broken ISO Clip System Supporting Horizontal Sub-girts – Clear Wall

Detail 5.1.43 ..... B.5.43

Interior and Exterior Insulated 3 5/8” x 1 5/8” Steel Stud (16” o.c.) Wall Assembly with Thermally Broken ISO Clip System Supporting Vertical Sub-girts – Clear Wall

Detail 5.1.44 ..... B.5.44

Interior and Exterior Insulated 3 5/8” x 1 5/8” Steel Stud (16” o.c.) Wall Assembly with Thermally Broken ISO Clip System Supporting Horizontal Sub-girts – Clear Wall

Detail 5.1.45 ..... B.5.45

Exterior Insulated 3 5/8” x 1 5/8” Steel Stud (16” o.c.) Wall Assembly with Thermally Broken ISO Clip System (16” o.c.) Supporting Horizontal and Vertical Sub-girts – Clear Wall

Detail 5.1.46 ..... B.5.46

Exterior Insulated 3 5/8” x 1 5/8” Steel Stud (16” o.c.) Wall Assembly with Thermally Broken ISO Clip System (32” o.c.) Supporting Horizontal and Vertical Sub-girts – Clear Wall

Detail 5.1.47 ..... B.5.47

Exterior Insulated 3 5/8” x 1 5/8” Steel Stud (16” o.c.) Wall Assembly with Nvelope – NV1 Clip System Supporting Cladding – Clear Wall

Detail 5.1.48 ..... B.5.48

Exterior and Interior Insulated 3 5/8” x 1 5/8” Steel Stud (16” o.c.) Wall Assembly with Nvelope – NV1 Clip System Supporting Cladding – Clear Wall

Detail 5.1.49 ..... B.5.49

Exterior and Interior Insulated 6” x 1 5/8” Steel Stud (16” o.c.) Wall Assembly with Nvelope – NV1 Clip System Supporting Cladding – Clear Wall

Detail 5.1.50 ..... B.5.50

Exterior and Interior Insulated 6” x 1 5/8” Slotted Steel R-Stud (16” o.c.) Wall Assembly with Nvelope – NV1 Clip System Supporting Cladding – Clear Wall

Detail 5.1.51 ..... B.5.51

Exterior and Interior Insulated 3 5/8” x 1 5/8” Steel Stud (16” o.c.) Wall Assembly with Nvelope – Eko Thermobracket Clip System Supporting Cladding – Clear Wall

Detail 5.1.52 ..... B.5.52

Exterior and Interior Insulated 3 5/8” x 1 5/8” Steel Stud (16” o.c.) Wall Assembly with Nvelope – Eko Thermobracket and NV1 Clip System Supporting Cladding – Clear Wall

Detail 5.1.53 ..... B.5.53

Exterior Insulated 3 5/8″ x 1 5/8″ Steel Stud (16″ O.C.) Wall Assembly with Cascadia Clip Fiberglass Thermal Spacers – Clear Wall

Detail 5.1.54 ..... B.5.54

Exterior and Interior Insulated 6″ x 1 5/8″ Steel Stud (16″ o.c. and 24” o.c.) Wall Assembly with Vertical Clips (24″ o.c. and 36” o.c.) Supporting Cladding and Owens Corning R-20 Batt Insulation in Stud Cavity – Clear Wall

Detail 5.1.55 ..... B.5.55

Exterior and Interior Insulated 6″ x 1 5/8” Steel Stud (16″ o.c. and 24” o.c.) Wall Assembly with Vertical Clips (24″ O.C. and 36” o.c.) Supporting Cladding and Owens Corning R-22.5 Batt Insulation in Stud Cavity– Clear Wall

Detail 5.1.56 ..... B.5.56

Exterior and Interior Insulated 6″ x 1 5/8”Steel Stud (16″ o.c. and 24” o.c.) Wall Assembly with Vertical Clips (24″ O.C. and 36” o.c.) Supporting Cladding and Owens Corning R-24 Batt Insulation in Stud Cavity– Clear Wall

Detail 5.1.57 ..... B.5.57

Owens Corning Exterior Insulated 6″ x 1 5/8″ Steel Stud (16″ o.c. and 24” o.c.) Wall Assembly with Vertical Clips (24″ o.c. and 36” o.c.) Supporting Cladding – Clear Wall

Detail 5.1.58 ..... B.5.58

Owens Corning Exterior Insulated 6″ x 1 5/8” Steel Stud (16″ o.c.) Wall Assembly with Thermally Isolated Vertical Brackets and Rail System (24″ o.c.) Supporting Metal Cladding – Clear Wall

Detail 5.1.59 ..... B.5.59

Exterior and Interior Insulated 6″ x 1 5/8″ Steel Stud (16″ o.c. and 24” o.c.) Wall Assembly with Vertical Clips (24″ o.c. and 36” o.c.) Supporting Cladding and R-20 Batt Insulation in Stud Cavity – Clear Wall

Detail 5.1.60 ..... B.5.60

Exterior and Interior Insulated 6″ x 1 5/8″ Steel Stud (16″ o.c. and 24” o.c.) Wall Assembly with Steel Brick Anchors Supporting Brick Veneer and Owens Corning R-20 Batt Insulation in Stud Cavity – Clear Wall

Detail 5.1.61 ..... B.5.61

Exterior and Interior Insulation 6” x 1 5/8” Steel Stud (16″ o.c. and 24” o.c.) Wall Assembly with Brick Ties Supporting Brick Veneer and Owens Corning R-22.5 Batt Insulation in Stud Cavity – Clear Wall

Detail 5.1.62 ..... B.5.62

Exterior and Interior Insulated 6” x 1 5/8” Steel Stud (16″ o.c. and 24” o.c.) Wall Assembly with Brick Ties Supporting Brick Veneer and Owens Corning R-24 Batt Insulation in Stud Cavity – Clear Wall

Detail 5.1.63 ..... B.5.63

Exterior and Interior Insulated 6” x 1 5/8” Steel Stud (16” o.c.) Wall Assembly with Heckmann Pos-I-Tie Veneer Anchoring System Supporting Brick Veneer and Owens Corning R-20 Batt Insulation in Stud Cavity – Clear Wall

Detail 5.1.64 ..... B.5.64

Exterior and Interior Insulated 6” x 1 5/8” Steel Stud (16” o.c.) Wall Assembly with Heckmann Pos-I-Tie Veneer Anchoring System Supporting Brick Veneer and Owens Corning R-22.5 Batt Insulation in Stud Cavity – Clear Wall

Detail 5.1.65 ..... B.5.65

Exterior and Interior Insulated 6” x 1 5/8” Steel Stud (16” o.c.) Wall Assembly with Heckmann Pos-I-Tie Veneer Anchoring System Supporting Brick Veneer and Owens Corning R-24 Batt Insulation in Stud Cavity – Clear Wall

Detail 5.1.66 ..... B.5.66

Exterior and Interior Insulated 6” x 1 5/8” Steel Stud (16” o.c.) Wall Assembly with Steel Anchor Supporting Brick Veneer, Owens Corning XPS Exterior Insulation and R-20 Batt Insulation in Stud Cavity – Clear Wall

Detail 5.1.67 ..... B.5.67

Exterior Insulated 3 5/8” x 1 5/8” Steel Stud (16” o.c.) Wall Assembly with Hohmann & Barnard Masonry Zinc 2-Seal Anchor Supporting Brick Veneer – Clear Wall

Detail 5.1.68 ..... B.5.68

Exterior Insulated 3 5/8” x 1 5/8” Steel Stud (16” o.c.) Wall Assembly with Hohmann & Barnard Masonry Stainless Steel 2-Seal Thermal Anchor Supporting Brick Veneer – Clear Wall

Detail 5.1.69 ..... B.5.69

Exterior Insulated 3 5/8” x 1 5/8” Steel Stud (16” o.c.) Wall Assembly with Hohmann & Barnard Masonry Stainless Steel 2-Seal Thermal Wing Nut Anchor Supporting Brick Veneer – Clear Wall

Detail 5.1.70 ..... B.5.70

Exterior Insulated 3 5/8” x 1 5/8” Steel Stud (16” o.c.) Wall Assembly with Hohmann & Barnard Masonry Carbon Steel X-Seal Anchor Supporting Brick Veneer – Clear Wall

Detail 5.1.71 ..... B.5.71

Exterior Insulated 3 5/8” x 1 5/8” Steel Stud (16” o.c.) Wall Assembly with Hohmann & Barnard Masonry Stainless Steel X-Seal Anchor Supporting Brick Veneer – Clear Wall

Detail 5.1.72 ..... B.5.72

Exterior Insulated 3 5/8” x 1 5/8” Steel Stud (16” o.c.) Wall Assembly with Hohmann & Barnard Masonry Carbon Steel HB-213 2X Anchor Supporting Brick Veneer – Clear Wall

Detail 5.1.73 ..... B.5.73

Exterior Insulated 3 5/8” x 1 5/8” Steel Stud (16” o.c.) Wall Assembly with Hohmann & Barnard Masonry Stainless Steel HB-213 2X Anchor Supporting Brick Veneer – Clear Wall

Detail 5.1.74 ..... B.5.74

Exterior Insulated 3 5/8” x 1 5/8” Steel Stud (16” o.c.) Wall Assembly with Hohmann & Barnard Masonry Carbon Steel HB-200-X Steel Tie Supporting Brick Veneer – Clear Wall

Detail 5.1.75 ..... B.5.75

Exterior Insulated 3 5/8” x 1 5/8” Steel Stud (16” o.c.) Wall Assembly with Hohmann & Barnard Masonry Stainless Steel HB-200-X Anchor Supporting Brick Veneer – Clear Wall

Detail 5.1.76 ..... B.5.76

Exterior Insulated 3 5/8” x 1 5/8” Steel Stud (16” o.c.) Wall Assembly with Hohmann & Barnard Masonry Carbon Steel BL-407 Anchor Supporting Brick Veneer – Clear Wall

Detail 5.1.77 ..... B.5.77

Exterior Insulated 3 5/8” x 1 5/8” Steel Stud (16” o.c.) Wall Assembly with Hohmann & Barnard Masonry Stainless Steel BL-407 Anchor Supporting Brick Veneer – Clear Wall

Detail 5.1.78 ..... B.5.78

Exterior and Interior Insulated 6″ x 1 5/8″ Steel Stud (16″ o.c. and 24” o.c.) Wall Assembly with Stainless Steel Brick Anchors Supporting Brick Veneer and R-20 Batt Insulation in Stud Cavity – Clear Wall

Detail 5.1.79 ..... B.5.79

Exterior and Interior Insulated 6″ x 1 5/8″ Steel Stud (16″ o.c. and 24” o.c.) Wall Assembly with Steel Brick Anchors Supporting Brick Veneer and R-20 Batt Insulation in Stud Cavity – Clear Wall

Detail 5.1.80 ..... B.5.80

Exterior Insulated 6” x 1 5/8” Steel Stud (16” o.c.) Wall Assembly with ECO Cladding Alpha Vci Vertical System – Clear Wall

Detail 5.1.81 ..... B.5.81

Exterior and Interior Insulated 6” x 1 5/8” Steel Stud (16” o.c.) Wall Assembly with ECO Cladding Alpha Vci Vertical System – Clear Wall

Detail 5.1.82 ..... B.5.82

Exterior Insulated 6” x 1 5/8” Steel Stud (16” o.c.) Wall Assembly with ECO Cladding Alpha Hci Horizontal System – Clear Wall

Detail 5.1.83 ..... B.5.83

Exterior and Interior Insulated 6” x 1 5/8” Steel Stud (16” o.c.) Wall Assembly with ECO Cladding Alpha Hci Horizontal System – Clear Wall

Detail 5.1.84 ..... B.5.84

Exterior Insulated 3 5/8″ x 1 5/8″ Steel Stud (16″ O.C.) Wall Assembly with Armadillo FRR Horizontal Z-Girts Supporting Cladding – Clear Wall

Detail 5.1.85 ..... B.5.85

Exterior and Interior Insulated 3 5/8″ x 1 5/8″ Steel Stud (16″ O.C.) Wall Assembly with Armadillo FRR Horizontal Z-Girts Supporting Cladding – Clear Wall

Detail 5.1.86 ..... B.5.86

Exterior Insulated 3 5/8″ x 1 5/8″ Steel Stud (16″ O.C.) Wall Assembly with Armadillo FRR Vertical Z-Girts Supporting Cladding – Clear Wall

Detail 5.1.87 ..... B.5.87

Exterior and Interior Insulated 3 5/8″ x 1 5/8″ Steel Stud (16″ O.C.) Wall Assembly with Armadillo FRR Vertical Z-Girts Supporting Cladding – Clear Wall

Detail 5.1.88 ..... B.5.88

Exterior Insulated 3 5/8” x 1 5/8” Steel Stud (16” o.c.) Wall Assembly with Brick Ties (24” o.c.) Supporting Brick Veneer – Clear Wall

Detail 5.1.89 ..... B.5.89

Exterior Insulated 3 5/8” x 1 5/8” Steel Stud (16” o.c.) Wall Assembly with FERO Slotted Rap Ties (24” o.c.) Supporting Brick Veneer – Clear Wall

Detail 5.1.90 ..... B.5.90

Exterior Insulated 6″ x 1 5/8″ Steel Stud (16″ O.C.) Wall Assembly with Fiber Reinforced Plastic Clip Supporting Cladding – Clear Wall

Detail 5.1.91 ..... B.5.91

Exterior and Interior Insulated 6″ x 1 5/8″ Steel Stud (16″ O.C.) Wall Assembly with Fiber Reinforced Plastic Clip Supporting Metal Cladding and R-19 Batt in Stud Cavity – Clear Wall

Detail 5.1.92 ..... B.5.92

Exterior Insulated 6″ x 1 5/8″ Steel Stud (16″ O.C.) Wall Assembly with Double Aluminum Bracket Supporting Metal Cladding

Detail 5.1.93 ..... B.5.93

Exterior and Interior Insulated 6″ x 1 5/8″ Steel Stud (16″ O.C.) Wall Assembly with Double Aluminum Bracket Supporting Metal Cladding

Detail 5.1.94 ..... B.5.94

Exterior Insulated 6″ x 1 5/8″ Steel Stud (16″ O.C.) Wall Assembly with Technoform Clip and Steel Fasteners - Clear Wall

Detail 5.1.95 ..... B.5.95

Exterior Insulated 6″ x 1 5/8″ Steel Stud (16″ O.C.) Wall Assembly with Technoform Clip and Stainless Steel Fasteners - Clear Wall

Detail 5.1.96 ..... B.5.96

Exterior and Interior Insulated 6” x 1 5/8” Steel Stud (16” o.c.) Wall Assembly with Galvanized Horizontal Intermittent Clips (24” o.c.) Supporting Metal Cladding and Owens Corning R-20 Batt Insulation in Stud Cavity – Clear Wall

Detail 5.1.97 ..... B.5.97

Exterior and Interior Insulated 6” x 1 5/8” Steel Stud (16” o.c.) Wall Assembly with Galvanized Horizontal Intermittent Clips (24” o.c.) Supporting Metal Cladding and Owens Corning R-22.5 Batt Insulation in Stud Cavity – Clear Wall

Detail 5.1.98 ..... B.5.98

Exterior and Interior Insulated 6” x 1 5/8” Steel Stud (16” o.c.) Wall Assembly with Galvanized Horizontal Intermittent Clips (24” o.c.) Supporting Metal Cladding and Owens Corning R-24 Batt Insulation in Stud Cavity – Clear Wall

Detail 5.1.99 ..... B.5.99

Exterior Insulated 6” x 1 5/8” Steel Stud (16” o.c.) Wall Assembly with EJOT Crossfix Console and Horizontal Rail System Supporting Metal Cladding - Clear Wall

Detail 5.1.100 ..... B.5.100

Exterior and Interior Insulated 6” x 1 5/8” Steel Stud (16” o.c.) Wall Assembly with EJOT Crossfix Console and Horizontal Rail System Supporting Metal Cladding and R-20 Batt Insulation in Stud Cavity - Clear Wall

Detail 5.1.101 ..... B.5.101

Exterior Insulated 6” x 1 5/8” Steel Stud (24” o.c.) Wall Assembly with EJOT Crossfix Console and Horizontal Rail System Supporting Metal Cladding - Clear Wall

Detail 5.1.102 ..... B.5.102

Exterior and Interior Insulated 6” x 1 5/8” Steel Stud (24” o.c.) Wall Assembly with EJOT Crossfix Console and Horizontal Rail System Supporting Metal Cladding and R-20 Batt Insulation in Stud Cavity - Clear Wall

Detail 5.1.103 ..... B.5.103

Exterior Insulated 6” x 1 5/8” Steel Stud (16” o.c.) Wall Assembly with EJOT Crossfix Console and Vertical Rail System Supporting Metal Cladding - Clear Wall

Detail 5.1.104 ..... B.5.104

Exterior and Interior Insulated 6” x 1 5/8” Steel Stud (16” o.c.) Wall Assembly with EJOT Crossfix Console and Vertical Rail System Supporting Metal Cladding and R-20 Batt Insulation in Stud Cavity - Clear Wall

Detail 5.1.105 ..... B.5.105

Exterior Insulated 6” x 1 5/8” Steel Stud (24” o.c.) Wall Assembly with EJOT Crossfix Console and Vertical Rail System Supporting Metal Cladding - Clear Wall

Detail 5.1.106 ..... B.5.106

Exterior and Interior Insulated 6” x 1 5/8” Steel Stud (24” o.c.) Wall Assembly with EJOT Crossfix Console and Vertical Rail System Supporting Metal Cladding and R-20 Batt Insulation in Stud Cavity - Clear Wall

Detail 5.1.107 ..... B.5.107

Exterior Insulated 6” x 1 /58” Steel Stud (16” o.c.) Wall Assembly with Horizontal Z-Girts (24” o.c.) Supporting Cladding and Owens Corning ThermaFiber RainBarrier HC Max Insulation – Clear Wall

Detail 5.1.108 ..... B.5.108

Exterior Insulated 6” x 1 5/8” Steel Stud (16” o.c.) Wall Assembly with High Compression Insulation and Through Insulation Steel Fasteners (12” o.c.) Supporting Cladding, Owens Corning ThermaFiber RainBarrier HC Max Insulation – Clear Wall

Detail 5.1.109 ..... B.5.109

Exterior Insulated 6” x 1 5/8” Steel Stud (16” o.c.) Wall Assembly with High Compression Insulation and Through Insulation Steel Fasteners (12” o.c.) Supporting Cladding, Owens Corning ThermaFiber RainBarrier Ci HC 80/45 Insulation – Clear Wall

Detail 5.1.110 ..... B.5.110

Exterior Insulated 6” x 1 5/8” Steel Stud (16” o.c.) Wall Assembly with High Compression Insulation and Through Insulation Stainless Steel Fasteners (12”

o.c.) Supporting Cladding, Owens Corning ThermaFiber RainBarrier HC Max Insulation – Clear Wall

Detail 5.1.111 ..... B.5.111

Exterior Insulated 6” x 1 5/8” Steel Stud (16” o.c.) Wall Assembly with High Compression Insulation and Through Insulation Stainless Steel Fasteners (12” o.c.) Supporting Cladding, Owens Corning ThermaFiber RainBarrier Ci HC 80/45 Insulation – Clear Wall

Detail 5.1.112 ..... B.5.112

Exterior and Interior Insulated 6” x 1 5/8” Steel Stud (16” o.c.) Wall Assembly with High Compression Insulation and Through Insulation Stainless Steel Fasteners (16” o.c.) Supporting Cladding, Owens Corning ThermaFiber RainBarrier HC Max Insulation and R-20 Batt Insulation in Stud Cavity – Clear Wall

Detail 5.1.113 ..... B.5.113

Exterior and Interior Insulated 6” x 1 5/8” Steel Stud (16” o.c.) Wall Assembly with High Compression Insulation and Through Insulation Stainless Steel Fasteners (16” o.c.) Supporting Cladding, Owens Corning ThermaFiber RainBarrier Ci HC 80/45 Insulation and R-20 Batt Insulation in Stud Cavity – Clear Wall

Detail 5.1.114 ..... B.5.114

Exterior and Interior Insulated Wall Assembly with Brick Ties Supporting Brick Veneer

Detail 5.2.1 ..... B.5.115

Exterior Insulated 3 5/8″ x 1 5/8″ Steel Stud (16″ O.C.) Wall Assembly with Horizontal Z-Girts (24″ O.C.) Supporting Metal Cladding – Intermediate Floor Intersection

Detail 5.2.2 ..... B.5.116

Exterior Insulated 3 5/8″ x 1 5/8″ Steel Stud (16″ o.c.) Wall Assembly with Horizontal Z-Girts (24″ o.c.) Supporting Metal Cladding – Intermediate Floor Intersection with Top Side Insulation

Detail 5.2.3 ..... B.5.117

Exterior Insulated 3 5/8″ x 1 5/8″ Steel Stud (16″ o.c.) Wall Assembly with Horizontal Z-Girts (24″ o.c.) Supporting Metal Cladding – Intermediate Floor Intersection with Top & Under Side Insulation

Detail 5.2.4 ..... B.5.118

Exterior Insulated 3 5/8” x 1 5/8” Steel Stud (16” o.c.) Wall Assembly with Horizontal Z-girts (24” o.c.) Supporting Metal Cladding – Uninsulated Intermediate Floor Intersection with Uninsulated Curb

Detail 5.2.5 ..... B.5.119

Exterior and Interior Insulated 3 5/8” x 1 5/8” Steel Stud (16” o.c.) Wall Assembly with Horizontal Z-girts (24” o.c.) Supporting Metal Cladding – Uninsulated Intermediate Floor Intersection with Uninsulated Curb

Detail 5.2.6 ..... B.5.120

Exterior Insulated 3 5/8” x 1 5/8” Steel Stud (16” o.c.) Wall Assembly with Horizontal Z-girts (24” o.c.) Supporting Metal Cladding – Uninsulated Intermediate Floor Intersection with Insulated Curb

Detail 5.2.7 ..... B.5.121

Exterior and Interior Insulated 3 5/8” x 1 5/8” Steel Stud (16” o.c.) Wall Assembly with Horizontal Z-girts (24” o.c.) Supporting Metal Cladding – Uninsulated Intermediate Floor Intersection with Insulated Curb

Detail 5.2.8 ..... B.5.122

Exterior and Interior Insulated 3 5/8” x 1 5/8” Steel Stud (16” o.c.) Wall Assembly with Vertical Z Girts (16” o.c.) Supporting Stucco Cladding – Uninsulated Intermediate Floor Intersection

Detail 5.2.9 ..... B.5.123

Exterior Insulated 3 5/8” x 1 5/8” Steel Stud (16” o.c.) Drained EIFS Wall Assembly – Isokorb CM20 Thermally Broken Slab Projection without Concrete Curb

Detail 5.2.10 ..... B.5.124

Exterior and Interior Insulated 3 5/8” x 1 5/8” Steel Stud (16” o.c.) Drained EIFS Wall Assembly – Isokorb CM20Thermally Broken Slab Projection without Concrete Curb

Detail 5.2.11 ..... B.5.125

Exterior and Interior Insulated 3 5/8” x 1 5/8” Steel Stud (16” o.c.) Wall Assembly with Horizontal Z-girts (24” o.c.) Supporting Metal Cladding – Isokorb CM20 Thermally Broken Slab Projection with Uninsulated Curb

Detail 5.2.12 ..... B.5.126

Exterior Insulated 3 5/8” x 1 5/8” Steel Stud (16” o.c.) Wall Assembly with Horizontal Z-girts (24” o.c.) Supporting Metal Cladding – Isokorb CM20 Thermally Broken Slab Projection with Uninsulated Curb

Detail 5.2.13 ..... B.5.127

Exterior Insulated 3 5/8” x 1 5/8” Steel Stud (16” o.c.) Wall Assembly with Horizontal Z-girts (24” o.c.) Supporting Metal Cladding – Isokorb CM20 Thermally Broken Slab Projection with Insulated Curb

Detail 5.2.14 ..... B.5.128

Exterior and Interior Insulated 3 5/8” x 1 5/8” Steel Stud (16” o.c.) Wall Assembly with Horizontal Z-girts (24” o.c.) Supporting Metal Cladding – Isokorb CM20 Thermally Broken Slab Projection with Insulated Curb

Detail 5.2.15 ..... B.5.129

Exterior Insulated 3 5/8” x 1 5/8” Steel Stud (16” o.c.) Drained EIFS Wall Assembly – Intermediate Floor Intersection

Detail 5.2.16 ..... B.5.130

Exterior and Interior Insulated 3 5/8” x 1 5/8” Steel Stud (16” o.c.) Drained EIFS Wall Assembly – Intermediate Floor Intersection

Detail 5.2.17 ..... B.5.131

Exterior Insulated 3 5/8” x 1 5/8” Steel Stud (16” o.c.) Wall Assembly with Thermally Broken ISO Clip System Supporting Vertical Sub-girts – Intermediate Concrete Floor Intersection

Detail 5.2.18 ..... B.5.132

Exterior Insulated 3 5/8” x 1 5/8” Steel Stud (16” o.c.) Wall Assembly with Thermally Broken ISO Clip System Supporting Horizontal Sub-girts – Intermediate Concrete Floor Intersection

Detail 5.2.19 ..... B.5.133

Exterior and Interior Insulated 3 5/8” x 1 5/8” Steel Stud (16” o.c.) Wall Assembly with Vertical Z-girts (16” o.c.) Supporting Stucco Cladding – Steel Framed Floor with Cross Cavity Flashing

Detail 5.2.20 ..... B.5.134

Exterior Insulated 3 5/8’’ x 1 5/8’’ Steel Stud (16’’ o.c.) Wall Assembly with Fiberglass Spacer and Through Insulation Fasteners Supporting Cladding – Insulated Intermediate Floor Intersection

Detail 5.2.21 ..... B.5.135

Exterior Insulated 3 5/8’’ x 1 5/8’’ Steel Stud (16’’ o.c.) Wall Assembly with Thermally Isolated Aluminum Clip Horizontal Sub-girt System Supporting Cladding – Intermediate Floor Intersection

Detail 5.2.22 ..... B.5.136

Exterior Insulated 3 5/8” x 1 5/8” Steel Stud (16”o.c.) Wall Assembly with TAC Fiber Reinforced Plastic Girts Supporting Cladding – Intermediate Floor Intersection

Detail 5.2.23 ..... B.5.137

Exterior Insulated 3 5/8” x 1 5/8” Steel Stud (16” o.c.) Wall Assembly with Thermally Broken Aluminum Clip Rail System (24” o.c.) Supporting Cladding – Intermediate Floor Intersection

Detail 5.2.24 ..... B.5.138

Exterior and Interior Insulated 3 5/8″ x 1 5/8″ Steel Stud (16″ o.c) Wall Assembly with Horizontal Z-Girts (24″ o.c.) Supporting Metal Cladding – Structural Steel Framed Floor Intersection

Detail 5.2.25 ..... B.5.139

Interior Insulated 3 5/8″ x 1 5/8″ Steel Stud (16″ o.c) Wall Assembly with Horizontal Z-Girts (24″ o.c.) Supporting Metal Cladding – Structural Steel Framed Floor Intersection

Detail 5.2.26 ..... B.5.140

Exterior and Interior Insulated Wall Assembly with Shelf Angle & Brick Ties Supporting Brick Veneer – Intermediate Floor Intersection

Detail 5.2.27 ..... B.5.141

Exterior and Interior Insulated Wall Assembly with Spaced Shelf Angle & Brick Ties Supporting Brick Veneer – Intermediate Floor Intersection

Detail 5.2.28 ..... B.5.142

Exterior and Interior Insulated Wall Assembly with Stainless Steel Shelf Angle & Brick Ties Supporting Brick Veneer – Intermediate Floor Intersection

Detail 5.2.29 ..... B.5.143

Exterior and Interior Insulated Wall Assembly with Thermally Broken Steel Shelf Angle & Brick Ties Supporting Brick Veneer – Slab Intersection

Detail 5.2.30 ..... B.5.144

Exterior Insulated 3 5/8” x 1 5/8” Steel Stud Wall Assembly with Horizontal Z-girts Supporting Metal Cladding – Armatherm 500 Thermally Broken Slab Projection with Insulated Curb

Detail 5.2.31 ..... B.5.145

Exterior Insulated 3 5/8” x 1 5/8” Steel Stud Wall Assembly with Armatherm Z-girts Supporting Metal Cladding – Armatherm 500-080 Thermally Broken Slab Projection with Insulated Curb

Detail 5.2.32 ..... B.5.146

Exterior and Interior Insulated 3 5/8” x 1 5/8” Steel Stud (16” o.c.) Wall Assembly with Nvelope – Eko Thermobracket and NV1 Clip System Supporting Cladding – Intermediate Floor Intersection

Detail 5.2.33 ..... B.5.147

Exterior Insulated 3 5/8” x 1 5/8” Steel Stud (16” o.c.) Wall Assembly with FERO Slotted Rap Ties (24” o.c.) Supporting Brick Veneer – Intermediate Floor Intersection

Detail 5.2.34 ..... B.5.148

Owens Corning Exterior Insulated 6’’ x 1 5/8” Steel Stud (16’’ o.c.) Wall Assembly with Thermally Isolated Vertical Brackets and Rail System (24” o.c.) Supporting Metal Cladding – Intermediate Floor Intersection

Detail 5.2.35 ..... B.5.149

Exterior and Interior Insulated 6’’ x 1 5/8” Steel Stud (16’’ o.c.) Wall Assembly with Thermally Isolated Vertical Brackets and Rail System (24” o.c.) Supporting Metal Cladding and Owens Corning R-20 Batt in Stud Cavity – Intermediate Floor Intersection

Detail 5.2.36 ..... B.5.150

Exterior and Interior Insulated 6’’ x 1 5/8” Steel Stud (16’’ o.c.) Wall Assembly with Thermally Isolated Vertical Brackets and Rail System (24” o.c.) Supporting Metal Cladding and Owens Corning R-22.5 Batt in Stud Cavity – Intermediate Floor Intersection

Detail 5.2.37 ..... B.5.151

Exterior and Interior Insulated 6’’ x 1 5/8” Steel Stud (16’’ o.c.) Wall Assembly with Thermally Isolated Vertical Brackets and Rail System (24” o.c.) Supporting

Metal Cladding and Owens Corning R-24 Batt in Stud Cavity – Intermediate Floor Intersection

Detail 5.2.38 ..... B.5.152

Exterior Insulated 6'' x 1 5/8" Steel Stud (16'' o.c.) Wall Assembly with FRP Vertical Brackets and Rail System Supporting Metal Cladding – Intermediate Floor Intersection

Detail 5.2.39 ..... B.5.153

Exterior and Interior Insulated 6'' x 1 5/8" Steel Stud (16'' o.c.) Wall Assembly with FRP Vertical Brackets and Rail System Supporting Metal Cladding and R-19 Batt in Stud Cavity – Intermediate Floor Intersection

Detail 5.2.40 ..... B.5.154

Exterior Insulated 3 5/8" x 1 5/8" Steel Stud (16" o.c.) Wall Assembly with Horizontal Z-girts (24" o.c.) Supporting Metal Cladding – Isokorb K65-V8 Thermally Broken Slab Projection with Insulated Curb

Detail 5.2.41 ..... B.5.155

Exterior Insulated 3 5/8" x 1 5/8" Steel Stud (16" o.c.) Wall Assembly with Horizontal Z-girts (24" o.c.) Supporting Metal Cladding – Isokorb K10-V6 Thermally Broken Slab Projection with Insulated Curb

Detail 5.2.42 ..... B.5.156

Exterior Insulated 3 5/8" x 1 5/8" Steel Stud (16" o.c.) Wall Assembly with Horizontal Z-girts (24" o.c.) Supporting Metal Cladding – Isokorb KXT65-V8 Thermally Broken Slab Projection with Insulated Curb

Detail 5.2.43 ..... B.5.157

Exterior Insulated 3 5/8" x 1 5/8" Steel Stud (16" o.c.) Wall Assembly with Horizontal Z-girts (24" o.c.) Supporting Metal Cladding – Isokorb KXT15-V6 Thermally Broken Slab Projection with Insulated Curb

Detail 5.2.44 ..... B.5.158

Exterior and Interior Insulated 3 5/8" x 1 5/8" Steel Stud (16" o.c.) Wall Assembly with Horizontal Z-girts (24" o.c.) Supporting Metal Cladding – Isokorb K65-V8 Thermally Broken Slab Projection with Insulated Curb

Detail 5.2.45 ..... B.5.159

Exterior and Interior Insulated 3 5/8" x 1 5/8" Steel Stud (16" o.c.) Wall Assembly with Horizontal Z-girts (24" o.c.) Supporting Metal Cladding – Isokorb K10-V6 Thermally Broken Slab Projection with Insulated Curb

Detail 5.2.46 ..... B.5.160

Exterior and Interior Insulated 3 5/8" x 1 5/8" Steel Stud (16" o.c.) Wall Assembly with Horizontal Z-girts (24" o.c.) Supporting Metal Cladding – Isokorb KXT65-V8 Thermally Broken Slab Projection with Insulated Curb

Detail 5.2.47 ..... B.5.161

Exterior and Interior Insulated 3 5/8” x 1 5/8” Steel Stud (16” o.c.) Wall Assembly with Horizontal Z-girts (24” o.c.) Supporting Metal Cladding – Isokorb KXT15-V6 Thermally Broken Slab Projection with Insulated Curb

Detail 5.3.1 ..... B.5.162

Exterior Insulated 3 5/8” x 1 5/8” Steel Stud (16” o.c.) Drained EIFS Wall Assembly – Window and Intermediate Floor Intersection

Detail 5.3.2 ..... B.5.163

Exterior and Interior Insulated 3 5/8” x 1 5/8” Steel Stud (16” o.c.) Drained EIFS Wall Assembly – Window and Intermediate Floor Intersection

Detail 5.3.3 ..... B.5.164

Exterior Insulated 3 5/8” x 1 5/8” Steel Stud (16” o.c.) Drained EIFS Wall Assembly – Window with Aerogel and Intermediate Floor Intersection

Detail 5.3.4 ..... B.5.165

Exterior and Interior Insulated 3 5/8” x 1 5/8” Steel Stud (16” o.c.) Drained EIFS Wall Assembly – Window with Aerogel and Intermediate Floor Intersection

Detail 5.3.5 ..... B.5.166

Exterior Insulated 3 5/8″ x 1 5/8″ Steel Stud (16″ o.c.) Wall Assembly with Horizontal Z-Girts (24″ o.c.) Supporting Metal Cladding – Window & Slab Intersection

Detail 5.3.6 ..... B.5.167

Exterior and Interior Insulated 3 5/8” x 1 5/8” Steel Stud (16” o.c.) Wall Assembly with Horizontal Z-girts (24” o.c.) Supporting Metal Cladding – Window and Intermediate Floor Intersection

Detail 5.3.7 ..... B.5.168

Exterior and Interior Insulated 3 5/8” x 1 5/8” Steel Stud (16” o.c.) Wall Assembly with Vertical Z Girts (16” o.c.) Supporting Stucco Cladding – Window and Intermediate Floor Intersection

Detail 5.3.8 ..... B.5.169

Interior Insulated Steel Frame Wall Assembly with Brick Cladding - Window Intersection

Detail 5.3.9 ..... B.5.170

Interior Insulated Steel Frame Wall Assembly with Brick Cladding - Window Intersection Aligned with Insulation

Detail 5.3.10 ..... B.5.171

Exterior Insulated 6” x 1 5/8” Steel Stud (16” o.c.) Wall Assembly with Thermally Isolated Vertical Brackets and Rail System (24” o.c.) Supporting Metal Cladding – Triple Glazed Aluminum Window & Intermediate Floor Intersection with Window Thermal Break Positioned in Steel Framing

Detail 5.3.11 ..... B.5.172

Exterior and Interior Insulated 6” x 1 5/8” Steel Stud (16” o.c.) Wall Assembly with Thermally Isolated Vertical Brackets and Rail System (24” o.c.) Supporting Metal

Cladding – Triple Glazed Aluminum Window & Intermediate Floor Intersection with Window Thermal Break Positioned in Steel Framing

Detail 5.3.12 ..... B.5.173

Exterior Insulated 6” x 1 5/8” Steel Stud (16” o.c.) Wall Assembly with Thermally Isolated Vertical Brackets and Rail System (24” o.c.) Supporting Metal Cladding – Triple Glazed Aluminum Curtain Wall & Intermediate Floor Intersection with Window Thermal Break Positioned in the Exterior Insulation

Detail 5.3.13 ..... B.5.174

Exterior and Interior Insulated 6” x 1 5/8” Steel Stud (16” o.c.) Wall Assembly with Thermally Isolated Vertical Brackets and Rail System (24” o.c.) Supporting Metal Cladding – Triple Glazed Aluminum Curtain Wall & Intermediate Floor Intersection with Window Thermal Break Positioned in the Exterior Insulation

Detail 5.3.14 ..... B.5.175

Owens Corning Exterior Insulated 6” x 1 5/8” Steel Stud (16” o.c.) Wall Assembly with Thermally Isolated Vertical Brackets and Rail System (24” o.c.) Supporting Metal Cladding – Double Glazed Aluminum Window and Intermediate Floor Intersection

Detail 5.3.15 ..... B.5.176

Exterior and Interior Insulated 6” x 1 5/8” Steel Stud (16” o.c.) Wall Assembly with Thermally Isolated Vertical Brackets and Rail System (24” o.c.) Supporting Metal Cladding and Owens Corning R-20 Batt in Stud Cavity – Double Glazed Aluminum Window and Intermediate Floor Intersection

Detail 5.3.16 ..... B.5.177

Exterior and Interior Insulated 6” x 1 5/8” Steel Stud (16” o.c.) Wall Assembly with Thermally Isolated Vertical Brackets and Rail System (24” o.c.) Supporting Metal Cladding and Owens Corning R-22.5 Batt in Stud Cavity – Double Glazed Aluminum Window and Intermediate Floor Intersection

Detail 5.3.17 ..... B.5.178

Owens Corning Exterior Insulated 6” x 1 5/8” Steel Stud (16” o.c.) Wall Assembly with Thermally Isolated Vertical Brackets and Rail System (24” o.c.) Supporting Metal Cladding – Triple Glazed Aluminum Window and Intermediate Floor Intersection

Detail 5.3.18 ..... B.5.179

Exterior and Interior Insulated 6” x 1 5/8” Steel Stud (16” o.c.) Wall Assembly with Thermally Isolated Vertical Brackets and Rail System (24” o.c.) Supporting Metal Cladding and Owens Corning R-20 Batt in Stud Cavity – Triple Glazed Aluminum Window and Intermediate Floor Intersection

Detail 5.3.19 ..... B.5.180

Exterior and Interior Insulated 6” x 1 5/8” Steel Stud (16” o.c.) Wall Assembly with Thermally Isolated Vertical Brackets and Rail System (24” o.c.) Supporting Metal Cladding and Owens Corning R-22.5 Batt in Stud Cavity – Triple Glazed Aluminum Window and Intermediate Floor Intersection

Detail 5.3.20 ..... B.5.181

Exterior Insulated 6” x 1 5/8” Steel Stud (16” o.c.) Wall Assembly with FRP and Thermally Broken Vertical Brackets and Rail System Supporting Metal Cladding – Triple Glazed Vinyl Window and Intermediate Floor Intersection

Detail 5.3.21 ..... B.5.182

Exterior Insulated 6” x 1 5/8” Steel Stud (16” o.c.) Wall Assembly with FRP and Thermally Broken Vertical Brackets and Rail System Supporting Metal Cladding with Aerogel Insulation Blanket – Triple Glazed Vinyl Window and Intermediate Floor Intersection

Detail 5.3.22 ..... B.5.183

Exterior and Interior Insulated 6” x 1 5/8” Steel Stud (16” o.c.) Wall Assembly with FRP and Thermally Broken Vertical Brackets and Rail System Supporting Metal Cladding and R-19 Batt in Stud Cavity – Triple Glazed Vinyl Window and Intermediate Floor Intersection

Detail 5.3.23 ..... B.5.184

Exterior and Interior Insulated 6” x 1 5/8” Steel Stud (16” o.c.) Wall Assembly with FRP and Thermally Broken Vertical Brackets and Rail System Supporting Metal Cladding with Aerogel Insulation Blanket and R-19 Batt in Stud Cavity– Triple Glazed Vinyl Window and Intermediate Floor Intersection

Detail 5.4.1 ..... B.5.185

Exterior Insulated 3 5/8” x 1 5/8” Steel Stud (16” o.c.) Drained EIFS Wall Assembly – Conventional Curtain Wall Transition

Detail 5.4.2 ..... B.5.186

Exterior and Interior Insulated 3 5/8” x 1 5/8” Steel Stud (16” o.c.) Drained EIFS Wall Assembly – Conventional Curtain Wall Transition

Detail 5.4.3 ..... B.5.187

Exterior and Interior Insulated 3 5/8” x 1 5/8” Steel Stud (16” o.c.) Wall Assembly – Curtain Wall Transition

Detail 5.4.4 ..... B.5.188

Exterior and Interior Insulated 3 5/8″ x 1 5/8″ Steel Stud (16″ o.c) Wall Assembly with Horizontal Z-Girts (24″ o.c.) Supporting Metal Cladding – Conventional Curtain Wall Intersection

Detail 5.4.5 ..... B.5.189

Exterior Insulated Concrete Wall and Steel Stud Assembly Supporting Metal Cladding– Curtain Wall Transition Intersection

Detail 5.4.6 ..... B.5.190

Exterior Insulated Concrete Wall and Steel Stud Assembly Supporting Metal Cladding with Cavity Insulation– Curtain Wall Transition Intersection

Detail 5.5.1 ..... B.5.191

Exterior Insulated 3 5/8” x 1 5/8” Steel Stud (16” o.c.) Drained EIFS Wall Assembly – Concrete Parapet & Slab Intersection

Detail 5.5.2 ..... B.5.192

Exterior Insulated 3 5/8” x 1 5/8” Steel Stud (16” o.c.) Drained EIFS Wall Assembly – Insulated Concrete Parapet & Slab Intersection

Detail 5.5.3 ..... B.5.193

Exterior and Interior Insulated 3 5/8” x 1 5/8” Steel Stud (16” o.c.) Drained EIFS Wall Assembly – Concrete Parapet & Slab Intersection

Detail 5.5.4 ..... B.5.194

Exterior and Interior Insulated 3 5/8” x 1 5/8” Steel Stud (16” o.c.) Drained EIFS Wall Assembly – Insulated Concrete Parapet & Slab Intersection

Detail 5.5.5 ..... B.5.195

Exterior Insulated 3 5/8″ x 1 5/8″ Steel Stud (16″ O.C.) Wall Assembly with Horizontal Z-Girts (24″ O.C.) Supporting Metal Cladding – Concrete Parapet & Slab Intersection

Detail 5.5.6 ..... B.5.196

Exterior and Interior Insulated 3 5/8” x 1 5/8” Steel Stud (16” o.c.) Wall Assembly with Horizontal Z-girts (24” o.c.) Supporting Metal Cladding – Concrete Parapet and Slab Intersection

Detail 5.5.7 ..... B.5.197

Exterior and Interior Insulated 3 5/8” x 1 5/8” Steel Stud (16” o.c.) Wall Assembly with Vertical Z Girts (16” o.c.) Supporting Stucco Cladding –Concrete Parapet & Slab Intersection

Detail 5.5.8 ..... B.5.198

Exterior and Interior Insulated 3 5/8” x 1 5/8” Steel Stud (16” o.c.) Wall Assembly with Intermittent Vertical Z Girts (16” o.c.) Supporting Metal Cladding –Concrete Roof Deck at Continuous Concrete Parapet

Detail 5.5.9 ..... B.5.199

Exterior and Interior Insulated 3 5/8” x 1 5/8” Steel Stud (16” o.c.) Wall Assembly with Intermittent Vertical Z Girts (16” o.c.) Supporting Metal Cladding –Concrete Roof Deck at Isokorb AXT1 Thermally Broken Concrete Parapet

Detail 5.5.10 ..... B.5.200

Exterior and Interior Insulated 3 5/8″ x 1 5/8″ Steel Stud (16″ o.c) Wall Assembly with Horizontal Z-Girts (24″ o.c.) Supporting Metal Cladding – Steel Roof Deck with Open Web Steel Joist & Parapet Intersection

Detail 5.5.11 ..... B.5.201

Exterior and Interior Insulated 3 5/8″ x 1 5/8″ Steel Stud (16″ o.c) Wall Assembly with Horizontal Z-Girts (24″ o.c.) Supporting Metal Cladding – Steel Roof Deck with Open Web Steel Joist & Parapet Intersection with Thermal Break under Parapet Stud Cavity

Detail 5.5.12 ..... B.5.202

Owens Corning Exterior Insulated 6″ x 1 5/8” Steel Stud (16″ o.c.) Wall Assembly with Thermally Isolated Vertical Brackets and Rail System (24″ o.c.) Supporting Metal Cladding – Concrete Parapet and Roof Intersection

Detail 5.5.13 ..... B.5.203

Exterior and Interior Insulated 6″ x 1 5/8” Steel Stud (16″ o.c.) Wall Assembly with Thermally Isolated Vertical Brackets and Rail System (24″ o.c.) Supporting Metal Cladding and Owens Corning R-20 Batt in Stud Cavity – Concrete Parapet and Roof Intersection

Detail 5.5.14 ..... B.5.204

Exterior and Interior Insulated 6″ x 1 5/8” Steel Stud (16″ o.c.) Wall Assembly with Thermally Isolated Vertical Brackets and Rail System (24″ o.c.) Supporting Metal Cladding and Owens Corning R-22.5 Batt in Stud Cavity – Concrete Parapet and Roof Intersection

Detail 5.5.15 ..... B.5.205

Exterior and Interior Insulated 6″ x 1 5/8” Steel Stud (16″ o.c.) Wall Assembly with Thermally Isolated Vertical Brackets and Rail System (24″ o.c.) Supporting Metal Cladding and Owens Corning R-24 Batt in Stud Cavity – Concrete Parapet and Roof Intersection

Detail 5.5.16 ..... B.5.206

Owens Corning Exterior Insulated 6″ x 1 5/8” Steel Stud (16″ o.c.) Wall Assembly with Thermally Isolated Vertical Brackets and Rail System (24″ o.c.) Supporting Metal Cladding – Concrete Roof Deck at Isokorb AXTI Thermal Broken Concrete Parapet

Detail 5.5.17 ..... B.5.207

Exterior and Interior Insulated 6″ x 1 5/8” Steel Stud (16″ o.c.) Wall Assembly with Thermally Isolated Vertical Brackets and Rail System (24″ o.c.) Supporting Metal Cladding and Owens Corning R-20 Batt in Stud Cavity – Concrete Roof Deck at Isokorb AXTI Thermal Broken Concrete Parapet

Detail 5.5.18 ..... B.5.208

Exterior and Interior Insulated 6″ x 1 5/8” Steel Stud (16″ o.c.) Wall Assembly with Thermally Isolated Vertical Brackets and Rail System (24″ o.c.) Supporting Metal Cladding and Owens Corning R-22.5 Batt in Stud Cavity – Concrete Roof Deck at Isokorb AXTI Thermal Broken Concrete Parapet

Detail 5.5.19 ..... B.5.209

Exterior and Interior Insulated 6″ x 1 5/8” Steel Stud (16″ o.c.) Wall Assembly with Thermally Isolated Vertical Brackets and Rail System (24″ o.c.) Supporting Metal Cladding and Owens Corning R-24 Batt in Stud Cavity – Concrete Roof Deck at Isokorb AXTI Thermal Broken Concrete Parapet

Detail 5.5.20 ..... B.5.210

Exterior Insulated 6″ x 1 5/8” Steel Stud (16″ o.c.) Wall Assembly with Thermally Isolated Vertical Brackets and Rail System Supporting Metal Cladding – Concrete Roof Deck at Isokorb AXT Thermally Broken Concrete Parapet

Detail 5.5.21 ..... B.5.211

Exterior and Interior Insulated 6″ x 1 5/8” Steel Stud (16″ o.c.) Wall Assembly with Thermally Isolated Vertical Brackets and Rail System Supporting Metal

Cladding and R-19 Batt in Stud Cavity – Concrete Roof Deck at Isokorb AXT Thermally Broken Concrete Parapet

Detail 5.6.1 ..... B.5.212

Exterior Insulated 3 5/8” x 1 5/8” Steel Stud (16” o.c.) Drained EIFS Wall Assembly – Corner Intersection

Detail 5.6.2 ..... B.5.213

Exterior and Interior Insulated 3 5/8” x 1 5/8” Steel Stud (16” o.c.) Drained EIFS Wall Assembly – Corner Intersection

Detail 5.6.3 ..... B.5.214

Exterior Insulated 3 5/8″ x 1 5/8″ Steel Stud (16″ O.C.) Wall Assembly with Horizontal Z-Girts (24″ O.C.) Supporting Metal Cladding – Corner Intersection

Detail 5.6.4 ..... B.5.215

Exterior Insulated 3 5/8″ x 1 5/8″ Steel Stud (16″ O.C.) Wall Assembly with Horizontal Z-Girts (24″ O.C.) Supporting Metal Cladding – Corner Intersection with Alternative Framing

Detail 5.6.5 ..... B.5.216

Exterior and Interior Insulated 3 5/8” x 1 5/8” Steel Stud (16” o.c.) Wall Assembly with Horizontal Z-girts (24” o.c.) Supporting Metal Cladding – Corner Intersection

Detail 5.6.6 ..... B.5.217

Window Wall System – Transition to Exterior Insulated Steel Stud Wall Assembly with Horizontal Z-girts (24” o.c.) Supporting Metal Cladding & No Interior Stud Cavity Insulation

Detail 5.6.7 ..... B.5.218

Window Wall System – Transition to Exterior Insulated Steel Stud Wall Assembly with Horizontal Z-girts (24” o.c.) Supporting Metal Cladding & Interior Sprayfoam and Fibreglass Batt Insulation

Detail 5.7.1 ..... B.5.219

Exterior and Interior Insulated 3 5/8″ x 1 5/8″ Steel Stud (16″ o.c) Wall Assembly with Horizontal Z-Girts (24″ o.c.) Supporting Metal Cladding – Structural Steel Column & Cantilever Beam Intersection (Canopy Support)

Detail 5.7.2 ..... B.5.220

Exterior and Interior Insulated 3 5/8” x 1 5/8” Steel Stud (16” o.c.) Wall Assembly with Horizontal Z-girts (24” o.c.) Supporting Metal Cladding – Structural Steel Floor Intersection with Uninterrupted Beam

Detail 5.7.3 ..... B.5.221

Exterior and Interior Insulated 3 5/8” x 1 5/8” Steel Stud (16” o.c.) Wall Assembly with Horizontal Z-girts (24” o.c.) Supporting Metal Cladding – Structural Steel Floor Intersection with Isolator Pad

Detail 5.7.4 ..... B.5.222

Exterior and Interior Insulated 3 5/8” x 1 5/8” Steel Stud (16” o.c.) Wall Assembly with Horizontal Z-girts (24” o.c.) Supporting Metal Cladding – Structural Steel Floor Intersection with Isokorb S22 Thermally Broken Beam

Detail 5.7.5 ..... B.5.223

Exterior Insulated 3 5/8” x 1 5/8” Steel Stud (16” o.c.) Wall Assembly with Intermittent Vertical Z-girts (16” o.c.) Supporting Metal Cladding – Concrete Floor to Steel Beam Connection

Detail 5.7.6 ..... B.5.224

Exterior Insulated 3 5/8” x 1 5/8” Steel Stud (16” o.c.) Wall Assembly with Intermittent Vertical Z-girts (16” o.c.) Supporting Metal Cladding – Concrete Floor to Steel Beam with a Thermal Isolator Pad Connection

Detail 5.7.7 ..... B.5.225

Exterior Insulated 3 5/8” x 1 5/8” Steel Stud (16” o.c.) Wall Assembly with Intermittent Vertical Z-girts (16” o.c.) Supporting Metal Cladding – Concrete Floor to Steel Beam with Isokorb KS14 Connection

Detail 5.7.8 ..... B.5.226

Exterior and Interior Insulated 3 5/8” x 1 5/8” Steel Stud (16” o.c.) Wall Assembly with Horizontal Z-girts (24” o.c.) Supporting Metal Cladding – Structural Steel Floor Intersection with Beam Thermal Break

Detail 5.7.9 ..... B.5.227

Exterior and Interior Insulated 3 5/8” x 1 5/8” Steel Stud (16” o.c.) Wall Assembly with Horizontal Z-girts (24” o.c.) Supporting Metal Cladding – Structural Steel Floor Intersection with Aerolon Coating

Detail 5.7.10 ..... B.5.228

Exterior Insulated 6’’ x 1 5/8” Steel Stud (16’’ o.c.) Wall Assembly with FRP Vertical Brackets and Rail System Supporting Metal Cladding – Structural Steel Column & Knife Edge Cable Support Intersection

Detail 5.7.11 ..... B.5.229

Exterior and Interior Insulated 6’’ x 1 5/8” Steel Stud (16’’ o.c.) Wall Assembly with FRP Vertical Brackets and Rail System Supporting Metal Cladding with R-19 Batt in Stud Cavity – Structural Steel Column & Knife Edge Cable Support Intersection

Detail 5.7.12 ..... B.5.230

Exterior and Interior Insulated 3 5/8” x 1 5/8” Steel Stud (16” o.c.) Wall Assembly with Horizontal Z-girts (24” o.c.) Supporting Metal Cladding – Structural Steel Floor Intersection with Thermal Isolator Pad

Detail 5.7.13 ..... B.5.231

Exterior and Interior Insulated 3 5/8” x 1 5/8” Steel Stud (16” o.c.) Wall Assembly with Horizontal Z-girts (24” o.c.) Supporting Metal Cladding – Structural Steel Floor Intersection with Isokorb KST System Thermally Broken Beam

Detail 5.8.1 ..... B.5.232

Exterior and Interior Insulated 3 5/8″ x 1 5/8″ Steel Stud (16″ o.c) Wall Assembly with Horizontal Z-Girts (24″ o.c.) Supporting Metal Cladding – Interior Wall Intersection

Detail 5.8.2 ..... B.5.233

Exterior Insulated 6″ x 1 5/8” Steel Stud (16″ o.c.) Wall Assembly with FRP Vertical Brackets and Rail System Supporting Metal Cladding – At-Grade Foundation Wall Intersection

Detail 5.8.3 ..... B.5.234

Exterior and Interior Insulated 6″ x 1 5/8” Steel Stud (16″ o.c.) Wall Assembly with FRP Vertical Brackets and Rail System Supporting Metal Cladding and R19 Batt Insulation in Stud Cavity – At-Grade Foundation Wall Intersection

Detail 5.1.1

Interior Insulated 3 5/8” x 1 5/8” Steel Stud Wall Assembly – Clear Wall

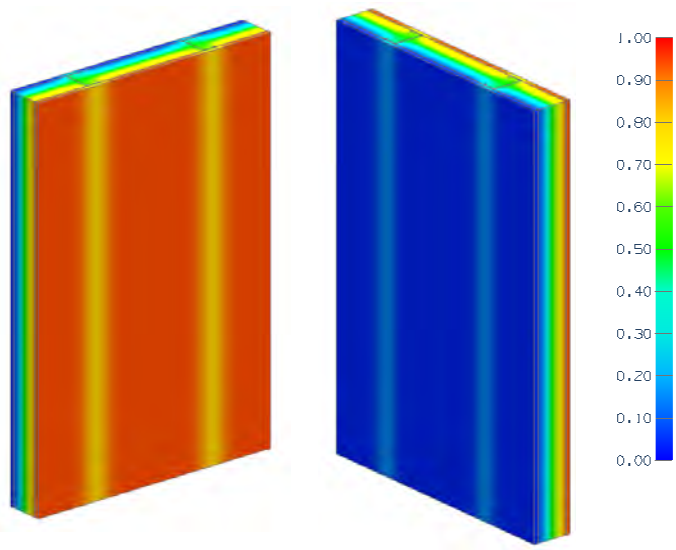

View from Interior View from Exterior

Thermal Performance Indicators

Assembly 1D (Nominal) R-Value	R_{1D}	R-2.3 (0.40 RSI) + interior insulation or R-0.9 (0.16 RSI) for air in stud cavity
Transmittance / Resistance	U_o, R_o	“clear wall” U- and R-value

Nominal (1D) vs. Assembly Performance Indicators

Stud Spacing	Stud Cavity Insulation	R_{1D} ft²·hr·ºF / Btu (m² K / W)	R_o ft²·hr·ºF / Btu (m² K / W)	U_o Btu/ft² ·hr ·ºF (W/m² K)
16” o.c.	Air	R-3.2 (0.56)	R-3.1 (0.55)	0.321 (1.82)
	R-12 (2.11 RSI) Batt	R-14.3 (2.51)	R-9.2 (1.61)	0.109 (0.62)
	R-13 (2.29 RSI) Batt	R-15.3 (2.69)	R-9.5 (1.68)	0.105 (0.60)
24” o.c.	Air	R-3.2 (0.56)	R-3.1 (0.55)	0.318 (1.81)
	R-12 (2.11 RSI) Batt	R-14.3 (2.51)	R-10.4 (1.83)	0.096 (0.55)
	R-13 (2.29 RSI) Batt	R-15.3 (2.69)	R-10.9 (1.92)	0.092 (0.52)

Detail 5.1.2

Interior Insulated 6” x 1 5/8” Steel Stud Wall Assembly – Clear Wall

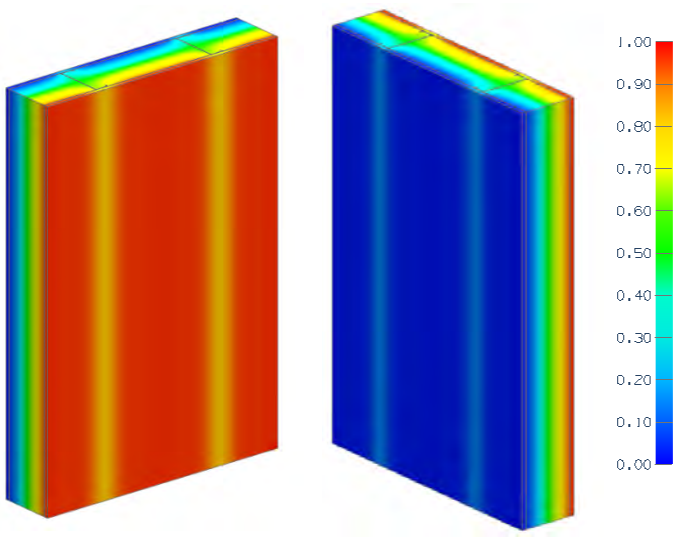

View from Interior View from Exterior

Thermal Performance Indicators

Assembly 1D (Nominal) R-Value	R_{1D}	R-2.3 (0.40 RSI) + interior insulation or R-0.9 (0.16 RSI) for air in stud cavity
Transmittance / Resistance	U_o, R_o	“clear wall” U- and R-value

Nominal (1D) vs. Assembly Performance Indicators

Stud Spacing	Stud Cavity Insulation	R_{1D} ft²·hr·°F / Btu (m² K / W)	R_o ft²·hr·°F / Btu (m² K / W)	U_o Btu/ft² ·hr ·°F (W/m² K)
16” o.c.	Air	R-3.2 (0.56)	R-3.1 (0.55)	0.320 (1.82)
	R-19 (3.35 RSI) Batt	R-21.3 (3.75)	R-11.4 (2.01)	0.088 (0.50)
	R-20 (3.52 RSI) Batt	R-22.3 (3.92)	R-11.6 (2.05)	0.086 (0.49)
	R-22 (3.87 RSI) Batt	R-24.3 (4.27)	R-12.1 (2.14)	0.082 (0.47)
	R-24 (4.22 RSI) Batt	R-26.3 (4.63)	R-12.6 (2.22)	0.079 (0.45)
24” o.c.	Air	R-3.2 (0.56)	R-3.1 (0.56)	0.318 (1.80)
	R-19 (3.35 RSI) Batt	R-21.3 (3.75)	R-13.5 (2.37)	0.074 (0.42)
	R-20 (3.52 RSI) Batt	R-22.3 (3.92)	R-13.8 (2.44)	0.072 (0.41)
	R-22 (3.87 RSI) Batt	R-24.3 (4.27)	R-14.5 (2.56)	0.069 (0.39)
	R-24 (4.22 RSI) Batt	R-26.3 (4.63)	R-15.2 (2.68)	0.066 (0.37)

Detail 5.1.3

Exterior Insulated 3 5/8" x 1 5/8" Steel Stud (16" o.c.) Drained EIFS Wall Assembly – Clear Wall

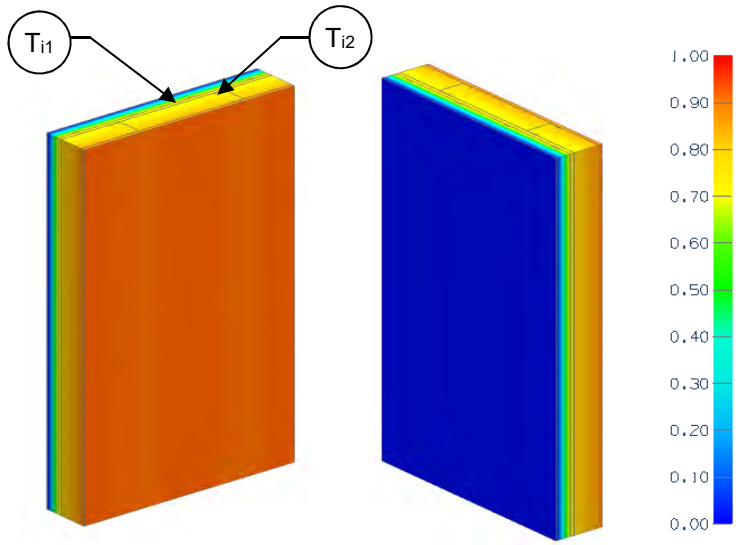

View from Interior View from Exterior

Thermal Performance Indicators

Assembly 1D (Nominal) R-Value	R_{1D}	R-2.7 (0.47 RSI) + exterior insulation
Transmittance / Resistance	U_o, R_o	"clear wall" U- and R-value
Surface Temperature Index[1]	T_i	0 = exterior temperature 1 = interior temperature

[1]Assumptions and limitations for surface temperatures identified in ASHRAE 1365-RP

Nominal (1D) vs. Assembly Performance Indicators

Exterior Insulation 1D R-Value (RSI)	R_{1D} ft²·hr·°F / Btu (m² K / W)	R_o ft²·hr·°F / Btu (m² K / W)	U_o Btu/ft² ·hr ·°F (W/m² K)
R-7.5 (1.32)	R-10.2 (1.80)	R-10.0 (1.76)	0.100 (0.57)
R-11.3 (1.98)	R-13.9 (2.46)	R-13.7 (2.41)	0.073 (0.41)
R-15 (2.64)	R-17.7 (3.12)	R-17.4 (3.06)	0.057 (0.33)

Temperature Indices

	R7.5	R11.3	R15	
T_{i1}	0.80	0.85	0.88	Min T on sheathing, between studs
T_{i2}	0.82	0.86	0.89	Max T on sheathing, along studs

Detail 5.1.4

Exterior and Interior Insulated 3 5/8" x 1 5/8" Steel Stud (16" o.c.) Drained EIFS Wall Assembly – Clear Wall

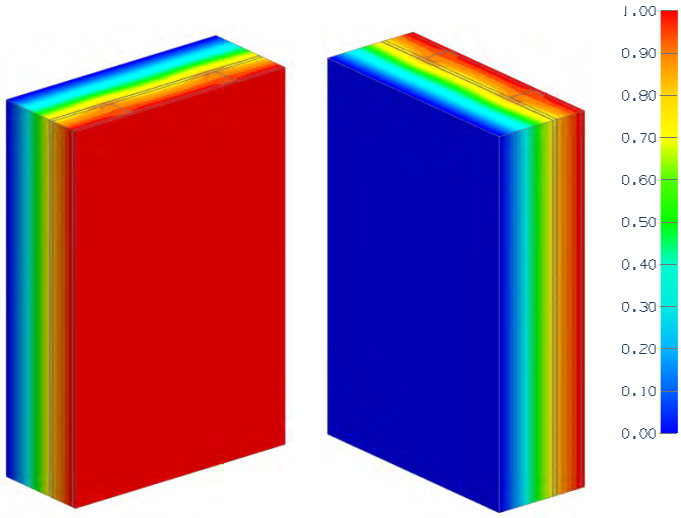

View from Interior View from Exterior

Thermal Performance Indicators

Assembly 1D (Nominal) R-Value	R_{1D}	R-13.8 (2.43 RSI) + exterior insulation
Transmittance / Resistance	U_o, R_o	"clear wall" U- and R-value

Nominal (1D) vs. Assembly Performance Indicators

Exterior Insulation 1D R-Value (RSI)	R_{1D} ft²·hr·°F / Btu (m² K / W)	R_o ft²·hr·°F / Btu (m² K / W)	U_o Btu/ft² ·hr ·°F (W/m² K)
R-7.5 (1.32)	R-21.3 (3.75)	R-16.6 (2.92)	0.060 (0.34)
R-11.3 (1.98)	R-25.0 (4.41)	R-20.3 (3.57)	0.049 (0.28)
R-15.0 (2.64)	R-28.8 (5.07)	R-24.0 (4.23)	0.042 (0.24)
R-18.8 (3.30)	R-32.5 (5.73)	R-27.8 (4.89)	0.036 (0.20)
R-22.5 (3.96)	R-36.3 (6.39)	R-31.5 (5.55)	0.032 (0.18)

Detail 5.1.5

Exterior Insulated 3 5/8″ x 1 5/8″ Steel Stud (16″ o.c.) Wall Assembly with Vertical Z-Girts (16″ o.c.) Supporting Metal Cladding – Clear Wall

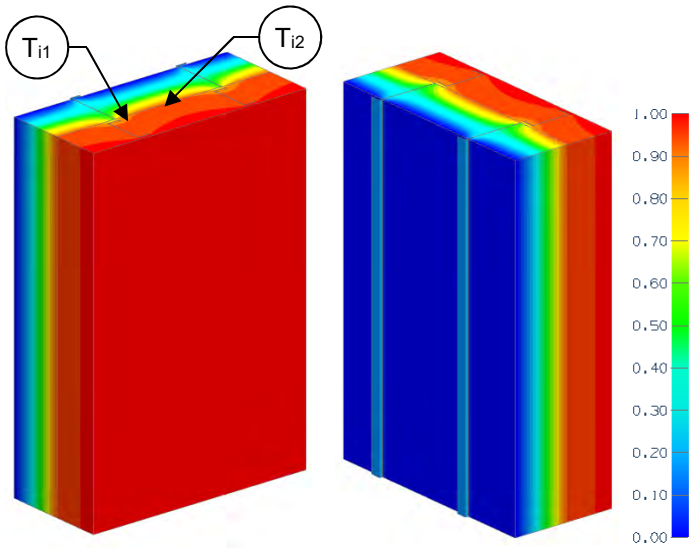

View from Interior View from Exterior

Thermal Performance Indicators

Assembly 1D (Nominal) R-Value	R_{1D}	R-3.2 (0.56) + insulation
Transmittance / Resistance without Anomaly	U_o, R_o	"clear field" U- and R-value, without connectors or joint
Surface Temperature Index[1]	T_i	0 = exterior temperature 1 = interior temperature

Nominal (1D) vs. Assembly Performance Indicators

Exterior Insulation 1D R-Value (RSI)	R_{1D} ft²·hr·°F / Btu (m² K / W)	R_o ft²·hr·°F / Btu (m² K / W)	U_o Btu/ft² ·hr ·°F (W/m² K)
R-5.0 (0.88)	R-8.2 (1.44)	R-6.4 (1.12)	0.157 (0.89)
R-10.0 (1.76)	R-13.2 (2.32)	R-8.3 (1.47)	0.120 (0.68)
R-15.0 (2.64)	R-18.2 (3.20)	R-9.7 (1.70)	0.103 (0.59)
R-20.0 (3.52)	R-23.2 (4.08)	R-10.8 (1.91)	0.092 (0.52)
R-25.0 (4.40)	R-28.2 (4.96)	R-11.8 (2.08)	0.085 (0.48)
R-30.0 (5.28)	R-33.2 (5.85)	R-12.7 (2.23)	0.079 (0.45)
R-35.0 (6.16)	R-38.2 (6.73)	R-13.5 (2.38)	0.074 (0.42)
R-40.0 (7.04)	R-43.2 (7.61)	R-14.3 (2.52)	0.070 (0.40)

Temperature Indices

	R5	R10	R15	R20	R25	R30	R35	R40	
T_{i1}	0.63	0.69	0.72	0.75	0.77	0.78	0.79	0.80	Min T on sheathing, along girts at stud intersection
T_{i2}	0.72	0.80	0.84	0.84	0.86	0.87	0.88	0.89	Max T on sheathing, centre of stud cavity

Detail 5.1.6

Exterior and Interior Insulated 6″ x 1 5/8″ Steel Stud (16″ o.c.) Wall Assembly with Vertical Z-Girts (16″ o.c.) Supporting Metal Cladding – Clear Wall

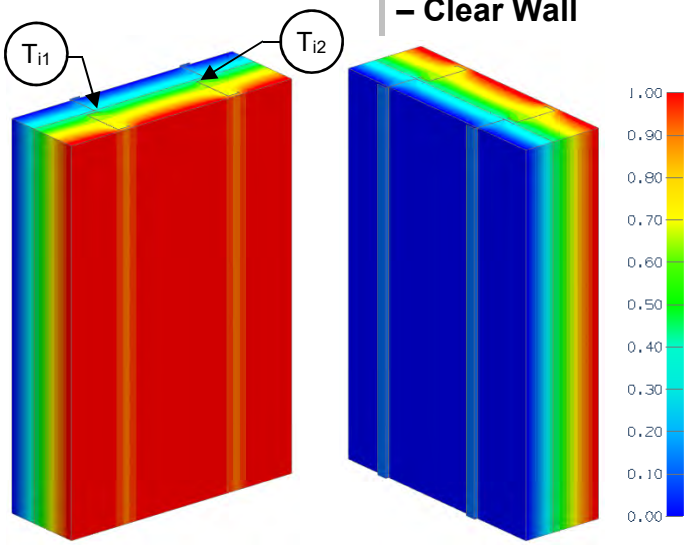

View from Interior View from Exterior

Thermal Performance Indicators

Assembly 1D (Nominal) R-Value	R_{1D}	R-22.3 (3.93) + insulation
Transmittance / Resistance without Anomaly	U_o, R_o	“clear field” U- and R-value, without connectors or joint
Surface Temperature Index[1]	T_i	0 = exterior temperature 1 = interior temperature

Nominal (1D) vs. Assembly Performance Indicators

Exterior Insulation 1D R-Value (RSI)	R_{1D} ft²·hr·°F / Btu (m² K / W)	R_o ft²·hr·°F / Btu (m² K / W)	U_o Btu/ft² ·hr ·°F (W/m² K)
R-20.0 (3.52)	R-42.3 (7.45)	R-17.6 (3.11)	0.057 (0.32)
R-25.0 (4.40)	R-47.3 (8.33)	R-18.6 (3.27)	0.054 (0.31)
R-30.0 (5.28)	R-52.3 (9.21)	R-19.4 (3.42)	0.052 (0.29)

Temperature Indices

	R20	R25	R30	
T_{i1}	0.45	0.48	0.50	Min T on sheathing, beside studs
T_{i2}	0.52	0.54	0.56	Max T on sheathing, behind girts at stud intersection

Detail 5.1.7

Exterior and Interior Insulated 6” x 1 5/8” Steel Stud (16” o.c.) Wall Assembly with Vertical Z-Girts (16” o.c.) – Clear Wall

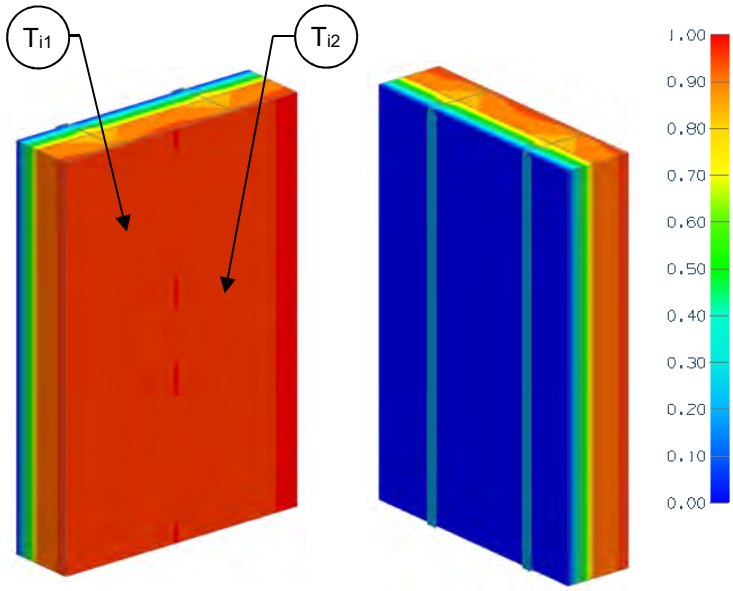

View from Interior View from Exterior

Thermal Performance Indicators

Assembly 1D (Nominal) R-Value	R_{1D}	R-12.6 (2.22 RSI) + exterior insulation
Transmittance / Resistance without Anomaly	U_o, R_o	“clear wall” U- and R-value
Surface Temperature Index[1]	T_i	0 = exterior temperature 1 = interior temperature

[1]Assumptions and limitations for surface temperatures identified in ASHRAE 1365-RP

Nominal (1D) vs. Assembly Performance Indicators

Exterior Insulation 1D R-Value (RSI)	R_{1D} ft²·hr·°F / Btu (m² K / W)	R_o ft²·hr·°F / Btu (m² K / W)	U_o Btu/ft² ·hr ·°F (W/m² K)
R-10.1 (1.78)	R-22.7 (4.00)	R-11.6 (2.04)	0.086 (0.42)

Temperature Indices

	R10	
T_{i1}	0.78	Min T on sprayfoam, beside studs
T_{i2}	0.81	Max T on sprayfoam, between studs

Detail 5.1.8

Exterior and Interior Insulated 6” x 1 5/8” Steel Stud (16” o.c.) Wall Assembly with Vertical Z-Girts (16” o.c.) – Clear Wall

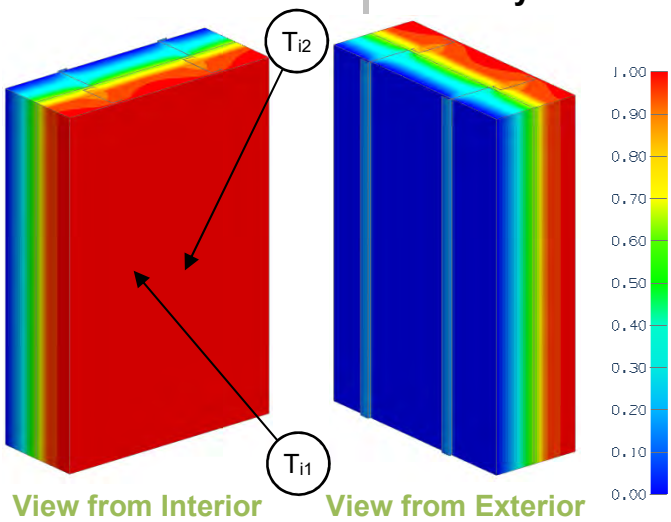

Thermal Performance Indicators

Assembly 1D (Nominal) R-Value	R_{1D}	R-14.6 (2.57) + insulation
Transmittance / Resistance without Anomaly	U_o, R_o	“clear field” U- and R-value, without connectors or joint
Surface Temperature Index[1]	T_i	0 = exterior temperature 1 = interior temperature

Nominal (1D) vs. Assembly Performance Indicators

Exterior Insulation 1D R-Value (RSI)	R_{1D} ft²·hr·°F / Btu (m² K / W)	R_o ft²·hr·°F / Btu (m² K / W)	U_o Btu/ft² ·hr ·°F (W/m² K)
R-10.0 (1.76)	R-24.6 (4.33)	R-12.0 (2.11)	0.083 (0.47)
R-15.0 (2.64)	R-29.6 (5.21)	R-13.2 (2.32)	0.076 (0.43)
R-20.0 (3.52)	R-34.6 (6.09)	R-14.2 (2.50)	0.071 (0.40)
R-25.0 (4.40)	R-39.6 (6.97)	R-15.1 (2.66)	0.066 (0.38)
R-30.0 (5.28)	R-44.6 (7.85)	R-15.9 (2.80)	0.063 (0.36)

Temperature Indices

	R10	R15	R20	R25	R30	
T_{i1}	0.79	0.81	0.82	0.83	0.84	Min T on sprayfoam, beside studs
T_{i2}	0.88	0.90	0.90	0.91	0.92	Max T on sprayfoam, between studs

Detail 5.1.9

Exterior Insulated 3 5/8″ x 1 5/8″ Steel Stud (16″ O.C.) Wall Assembly with Horizontal Z-Girts (24″ O.C.) Supporting Metal Cladding – Clear Wall

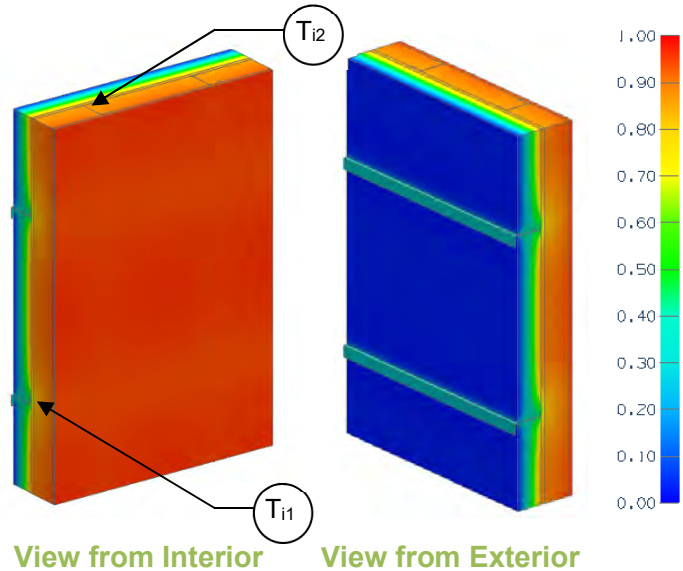

View from Interior View from Exterior

Thermal Performance Indicators

Assembly 1D (Nominal) R-Value	R_{1D}	R-3.2 (0.56 RSI) + exterior insulation
Transmittance / Resistance	U_o, R_o	"clear wall" U- and R-value
Surface Temperature Index[1]	T_i	0 = exterior temperature 1 = interior temperature

[1]Assumptions and limitations for surface temperatures identified in ASHRAE 1365-RP

Nominal (1D) vs. Assembly Performance Indicators

Exterior Insulation 1D R-Value (RSI)	R_{1D} ft²·hr·°F / Btu (m² K / W)	R_o ft²·hr·°F / Btu (m² K / W)	U_o Btu/ft² ·hr ·°F (W/m² K)
R-5 (0.88)	R-8.2 (1.44)	R-6.8 (1.21)	0.146 (0.83)
R-10 (1.76)	R-13.2 (2.32)	R-9.4 (1.66)	0.106 (0.60)
R-15 (2.64)	R-18.2 (3.20)	R-11.3 (1.99)	0.088 (0.50)
R-20 (3.52)	R-23.2 (4.08)	R-13.1 (2.31)	0.076 (0.43)
R-25 (4.40)	R-28.2 (4.96)	R-14.5 (2.56)	0.069 (0.39)

Detail 5.1.10

Exterior and Interior Insulated 6” x 1 /58” Steel Stud (16” o.c.) Wall Assembly with Horizontal Z-Girts (24” o.c.) Supporting Cladding, Owens Corning ThermaFiber RainBarrier HC Max Insulation and R-20 Batt Insulation in Stud Cavity – Clear Wall

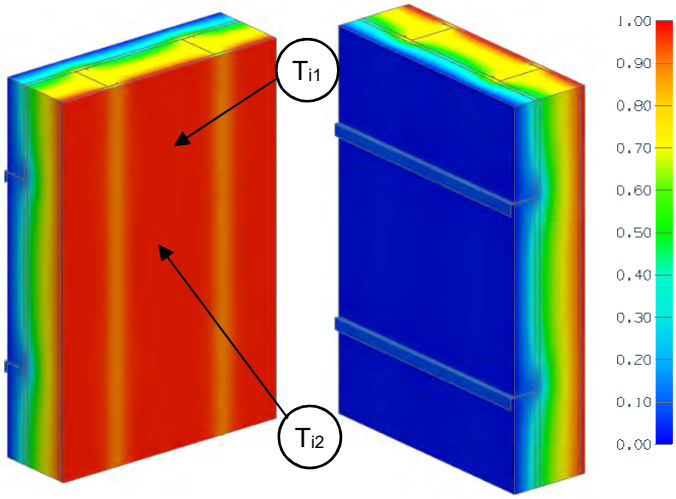

View from Interior View from Exterior

Thermal Performance Indicators

Assembly 1D (Nominal) R-Value	R_{1D}	R-22.5 (3.96 RSI) + exterior insulation
Transmittance / Resistance	U_o, R_o	“clear wall” U- and R-value
Surface Temperature Index	T_i	0 = exterior temperature 1 = interior temperature

Nominal (1D) vs. Assembly Performance Indicators

Exterior Insulation 1D R-Value (RSI)	R_{1D} ft²·hr·°F / Btu (m² K / W)	R_o ft²·hr·°F / Btu (m² K / W)	U_o Btu/ft² ·hr ·°F (W/m² K)
R-4.0 (0.70)	R-26.5 (4.67)	R-15.9 (2.80)	0.063 (0.357)
R-8.0 (1.41)	R-30.5 (5.37)	R-18.4 (3.24)	0.054 (0.308)
R-12.0 (2.11)	R-34.5 (6.08)	R-20.9 (3.68)	0.048 (0.272)
R-16.0 (2.82)	R-38.5 (6.78)	R-22.7 (4.00)	0.044 (0.250)
R-20.0 (3.52)	R-42.5 (7.48)	R-24.5 (4.31)	0.041 (0.232)
R-24.0 (4.23)	R-46.5 (8.19)	R-26.0 (4.58)	0.038 (0.218)

Temperature Indices

	R4	R12	R20	R24	
T_{i1}	0.14	0.23	0.29	0.31	Min T on sheathing, along girts between studs
T_{i2}	0.22	0.43	0.57	0.57	Max T on sheathing, between studs and girt

Temperature indices listed for selected scenarios. All other scenarios to be interpolated.

Detail 5.1.11

Exterior and Interior Insulated 6” x 1 5/8” Steel Stud (16” o.c.) Wall Assembly with Horizontal Z-Girts (24” o.c.) Supporting Cladding, Owens Corning ThermaFiber RainBarrier HC Plus 110 Insulation and R-20 Batt Insulation in Stud Cavity – Clear Wall

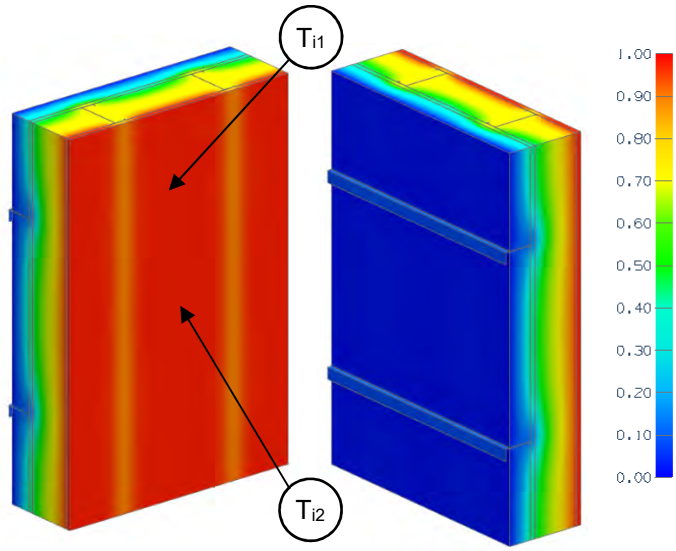

View from Interior View from Exterior

Thermal Performance Indicators

Assembly 1D (Nominal) R-Value	R_{1D}	R-22.5 (3.96 RSI) + exterior insulation
Transmittance / Resistance	U_o, R_o	“clear wall” U- and R-value
Surface Temperature Index	T_i	0 = exterior temperature 1 = interior temperature

Nominal (1D) vs. Assembly Performance Indicators

Exterior Insulation 1D R-Value (RSI)	R_{1D} ft²·hr·°F / Btu (m² K / W)	R_o ft²·hr·°F / Btu (m² K / W)	U_o Btu/ft² ·hr ·°F (W/m² K)
R-4.1 (0.72)	R-26.6 (4.68)	R-16.0 (2.82)	0.063 (0.355)
R-8.2 (1.44)	R-30.7 (5.41)	R-18.5 (3.26)	0.054 (0.306)
R-12.3 (2.17)	R-34.8 (6.13)	R-21.1 (3.71)	0.047 (0.270)
R-16.4 (2.89)	R-38.9 (6.85)	R-22.9 (4.03)	0.044 (0.248)
R-20.5 (3.61)	R-43.0 (7.57)	R-24.7 (4.35)	0.041 (0.230)
R-24.6 (4.33)	R-47.1 (8.29)	R-26.2 (4.62)	0.038 (0.217)

Temperature Indices

	R4.1	R12.3	R20.5	R24.6	
T_{i1}	0.14	0.23	0.29	0.31	Min T on sheathing, along girts between studs
T_{i2}	0.23	0.43	0.58	0.58	Max T on sheathing, between studs and girt

Temperature indices listed for selected scenarios. All other scenarios to be interpolated.

Detail 5.1.12

Exterior and Interior Insulated 6” x 1 5/8” Steel Stud (16” o.c.) Wall Assembly with Horizontal Z-Girts (24” o.c.) Supporting Cladding, Owens Corning ThermaFiber RainBarrier 45 Insulation and R-20 Batt Insulation in Stud Cavity – Clear Wall

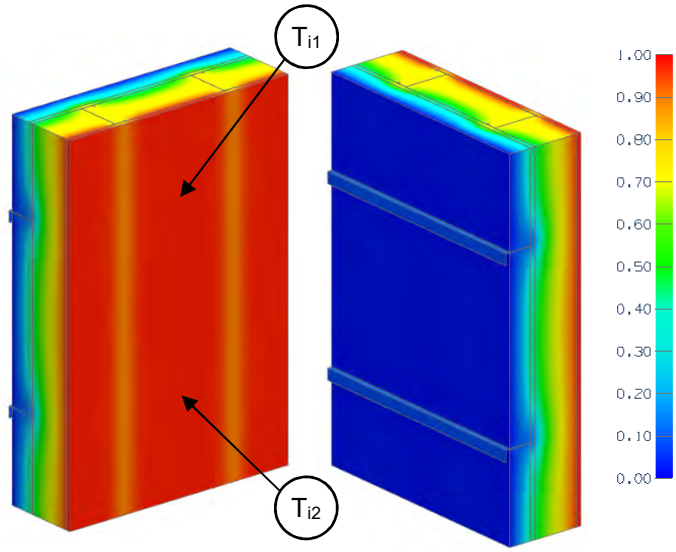

View from Interior View from Exterior

Thermal Performance Indicators

Assembly 1D (Nominal) R-Value	R_{1D}	R-22.5 (3.96 RSI) + exterior insulation
Transmittance / Resistance	U_o, R_o	“clear wall” U- and R-value
Surface Temperature Index	T_i	0 = exterior temperature 1 = interior temperature

Nominal (1D) vs. Assembly Performance Indicators

Exterior Insulation 1D R-Value (RSI)	R_{1D} ft²·hr·°F / Btu (m² K / W)	R_o ft²·hr·°F / Btu (m² K / W)	U_o Btu/ft² ·hr ·°F (W/m² K)
R-4.2 (0.74)	R-26.7 (4.70)	R-16.1 (2.83)	0.062 (0.353)
R-8.4 (1.48)	R-30.9 (5.44)	R-18.6 (3.28)	0.054 (0.304)
R-12.6 (2.22)	R-35.1 (6.18)	R-21.2 (3.74)	0.047 (0.268)
R-16.8 (2.96)	R-39.3 (6.92)	R-23.1 (4.06)	0.043 (0.246)
R-21.0 (3.70)	R-43.5 (7.66)	R-24.9 (4.38)	0.040 (0.228)
R-25.2 (4.44)	R-47.7 (8.40)	R-26.4 (4.66)	0.038 (0.215)

Temperature Indices

	R4.2	R12.6	R21.0	R25.2	
T_{i1}	0.14	0.23	0.29	0.31	Min T on sheathing, along girts between studs
T_{i2}	0.23	0.44	0.55	0.58	Max T on sheathing, between studs and girt

Temperature indices listed for selected scenarios. All other scenarios to be interpolated.

Detail 5.1.13

Exterior and Interior Insulated 3 5/8" x 1 5/8" Steel Stud (16" o.c.) Wall Assembly with Vertical Z-girts (16" o.c.) Supporting Stucco Cladding – Clear Wall

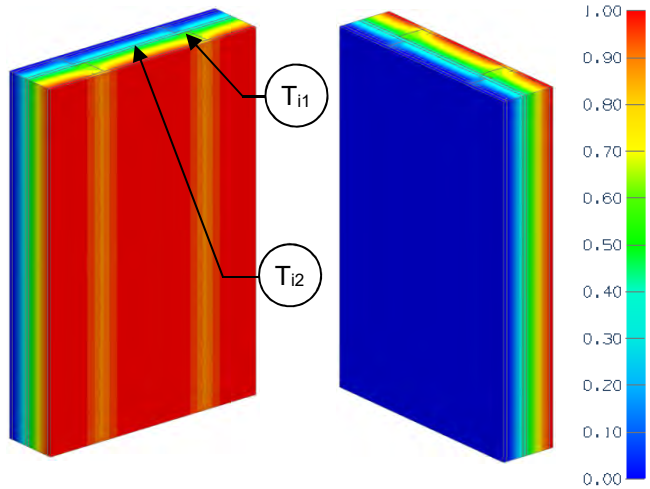

View from Interior View from Exterior

Thermal Performance Indicators

Assembly 1D (Nominal) R-Value	R_{1D}	R-14.5 (2.55 RSI) + exterior insulation
Transmittance / Resistance	U_o, R_o	"clear wall" U- and R-value
Surface Temperature Index[1]	T_i	0 = exterior temperature 1 = interior temperature

[1]Assumptions and limitations for surface temperatures identified in ASHRAE 1365-RP

Nominal (1D) vs. Assembly Performance Indicators

Exterior Insulation 1D R-Value (RSI)	R_{1D} ft²·hr·°F / Btu (m² K / W)	R_o ft²·hr·°F / Btu (m² K / W)	U_o Btu/ft² ·hr ·°F (W/m² K)
R-10 (1.76)	R-24.5 (4.31)	R-13.0 (2.29)	0.077 (0.44)
R-15 (2.64)	R-29.5 (5.20)	R-14.1 (2.49)	0.071 (0.40)
R-20 (3.52)	R-34.5 (6.08)	R-15.1 (2.66)	0.066 (0.38)

Temperature Indices

	R10	R15	R20	
T_{i1}	0.42	0.47	0.49	Min T on sheathing, beside studs
T_{i2}	0.48	0.53	0.57	Max T on sheathing, between studs

Detail 5.1.14

Exterior and Interior Insulated 3 5/8″ x 1 5/8″ Steel Stud (16″ o.c) Wall Assembly with Horizontal Z-Girts (24″ o.c.) Supporting Metal Cladding – Clear Wall

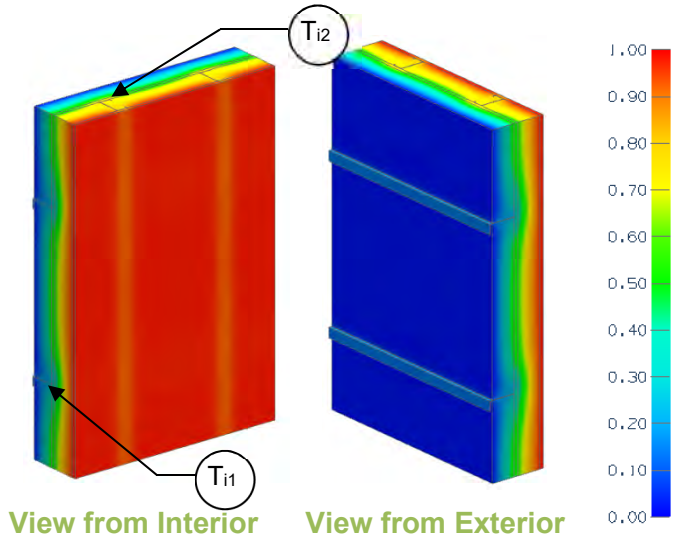

Thermal Performance Indicators

Assembly 1D (Nominal) R-Value	R_{1D}	R-14.2 (2.50 RSI) + exterior insulation
Transmittance / Resistance	U_o, R_o	"clear wall" U- and R-value
Surface Temperature Index[1]	T_i	0 = exterior temperature 1 = interior temperature

[1]Assumptions and limitations for surface temperatures identified in ASHRAE 1365-RP

Nominal (1D) vs. Assembly Performance Indicators

Exterior Insulation 1D R-Value (RSI)	R_{1D} ft²·hr·°F / Btu (m² K / W)	R_o ft²·hr·°F / Btu (m² K / W)	U_o Btu/ft² ·hr ·°F (W/m² K)
R-0 (0)	R-14.2 (2.50)	R-9.2 (1.62)	0.109 (0.62)
R-5 (0.88)	R-19.2 (3.38)	R-13.4 (2.36)	0.075 (0.42)
R-10 (1.76)	R-24.2 (4.26)	R-16.3 (2.87)	0.061 (0.35)
R-15 (2.64)	R-29.2 (5.14)	R-18.5 (3.25)	0.054 (0.31)
R-20 (3.52)	R-34.2 (6.02)	R-20.5 (3.61)	0.049 (0.28)
R-25 (4.40)	R-39.2 (6.90)	R-22.1 (3.90)	0.045 (0.26)

Temperature Indices

	R0	R5	R10	R15	R20	R25	
T_{i1}	0.06	0.21	0.28	0.32	0.36	0.38	Min T on sheathing, along girts between studs
T_{i2}	0.35	0.59	0.68	0.72	0.75	0.78	Max T on sheathing, along studs between girts

Detail 5.1.15

Exterior and Interior Insulated 6” x 1 5/8” Steel Stud (16” o.c.) Wall Assembly with Horizontal Z-Girts (24” o.c.) – Clear Wall

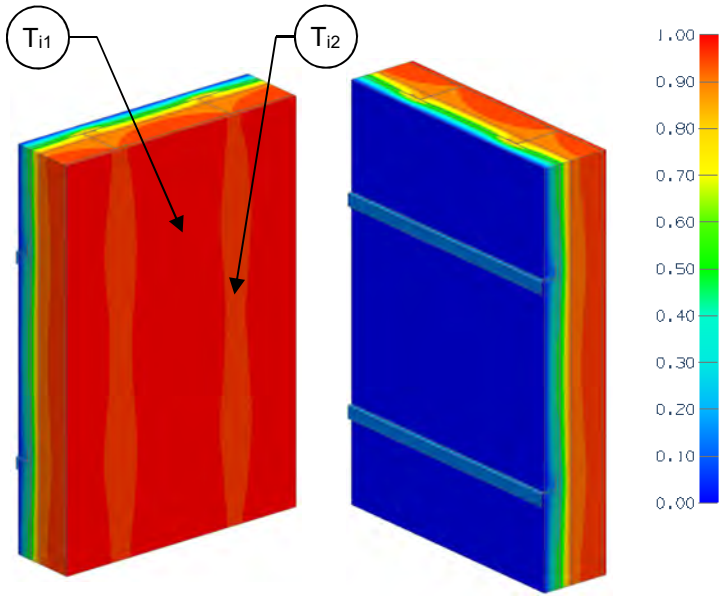

View from Interior View from Exterior

Thermal Performance Indicators

Assembly 1D (Nominal) R-Value	R_{1D}	R-12.6 (2.22 RSI) + exterior insulation
Transmittance / Resistance without Anomaly	U_o, R_o	“clear wall” U- and R-value
Surface Temperature Index[1]	T_i	0 = exterior temperature 1 = interior temperature

[1]Assumptions and limitations for surface temperatures identified in ASHRAE 1365-RP

Nominal (1D) vs. Assembly Performance Indicators

Exterior Insulation 1D R-Value (RSI)	R_{1D} ft²·hr·°F / Btu (m² K / W)	R_o ft²·hr·°F / Btu (m² K / W)	U_o Btu/ft² ·hr ·°F (W/m² K)
R-10.1 (1.78)	R-22.7 (4.00)	R-15.2 (2.68)	0.066 (0.37)

Temperature Indices

T_{i1}	0.78	Min T on sprayfoam, along horizontal girts between studs
T_{i2}	0.84	Max T on sprayfoam, along studs between horizontal girts

Detail 5.1.16

Exterior Insulated 3 5/8″ x 1 5/8″ Steel Stud (16″ O.C.) Wall Assembly with Vertical Z-Girts (24″ O.C.) & Horizontal Z-Girts (24″ O.C.) Supporting Metal Cladding – Clear Wall

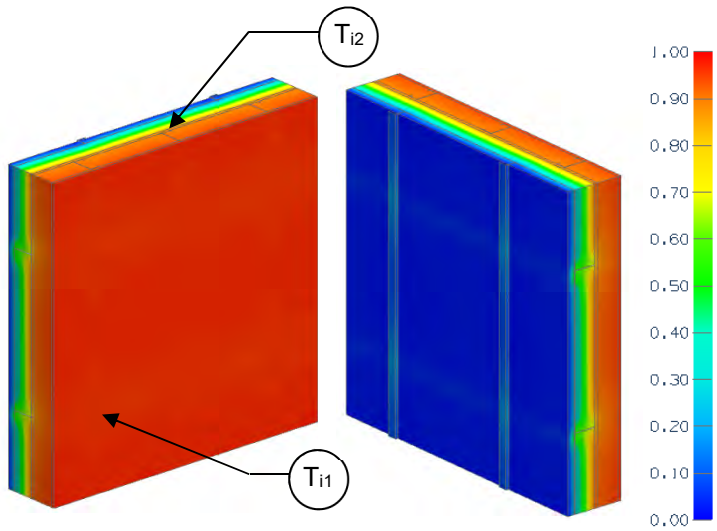

View from Interior View from Exterior

Thermal Performance Indicators

Assembly 1D (Nominal) R Value	R_{1D}	R-3.2 (0.56 RSI) + horizontal exterior insulation + vertical exterior insulation R-5 (0.88 RSI)
Transmittance / Resistance	U_o, R_o	"clear wall" U- and R-value
Surface Temperature Index[1]	T_i	0 = exterior temperature 1 = interior temperature

[1]Assumptions and limitations for surface temperatures identified in ASHRAE 1365-RP

Nominal (1D) vs. Assembly Performance Indicators

Exterior Insulation 1D R-Value (RSI)	R_{1D} ft²·hr·°F / Btu (m² K / W)	R_o ft²·hr·°F / Btu (m² K / W)	U_o Btu/ft² ·hr ·°F (W/m² K)
R-10 (0.88)	R-13.2 (2.32)	R-10.4 (1.82)	0.097 (0.55)
R-15 (1.76)	R-18.2 (3.20)	R-13.1 (2.31)	0.076 (0.43)
R-20 (2.64)	R-23.2 (4.08)	R-15.3 (2.70)	0.065 (0.37)
R-25 (3.52)	R-28.2 (4.96)	R-17.2 (3.03)	0.058 (0.33)
R-30 (4.40)	R-33.2 (5.84)	R-18.9 (3.33)	0.053 (0.30)

Temperature Indices

	R10	R15	R20	R25	R30	
T_{i1}	0.74	0.77	0.80	0.81	0.82	Min T on sheathing, at vertical and horizontal girt intersection, not at a stud intersection
T_{i2}	0.85	0.89	0.90	0.91	0.93	Max T on sheathing, along studs between girts

Detail 5.1.17

Exterior Insulated 3 5/8″ x 1 5/8″ Steel Stud (16″ O.C.) Wall Assembly with Intermittent Vertical Z-Girts (16″ O.C.) Supporting Metal Cladding – Clear Wall

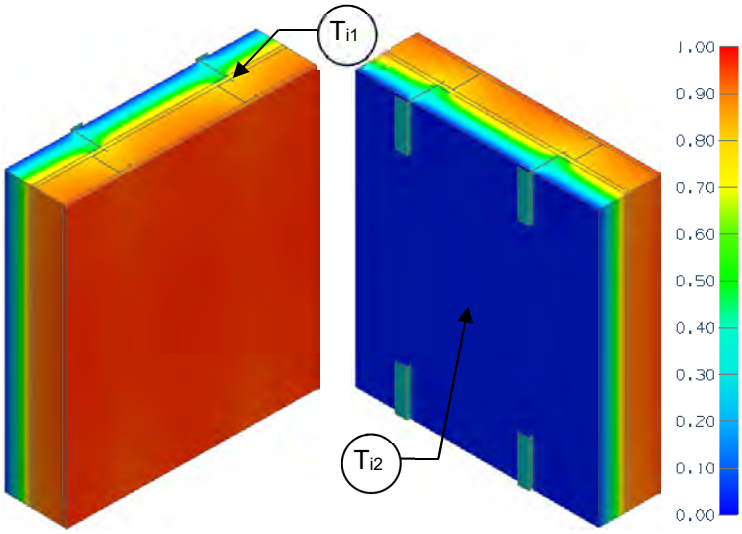

View from Interior **View from Exterior**

Thermal Performance Indicators

Assembly 1D (Nominal) R-Value	R_{1D}	R-3.2 (0.56 RSI) + horizontal exterior insulation
Transmittance / Resistance	U_o, R_o	"clear wall" U- and R-value. Results for three vertical spacings (12", 24", 36") are presented below
Surface Temperature Index[1]	T_i	0 = exterior temperature 1 = interior temperature

[1]Assumptions and limitations for surface temperatures identified in ASHRAE 1365-RP

Nominal (1D) vs. Assembly Performance Indicators

Exterior Insulation 1D R-Value (RSI)	R_{1D} ft²·hr·°F / Btu (m² K / W)	12" Vertical Spacing		24" Vertical Spacing		36" Vertical Spacing	
		R_o ft²·hr·°F / Btu (m² K / W)	U_o Btu/ft² ·hr ·°F (W/m² K)	R_o ft²·hr·°F / Btu (m² K / W)	U_o Btu/ft² ·hr ·°F (W/m² K)	R_o ft²·hr·°F / Btu (m² K / W)	U_o Btu/ft² ·hr ·°F (W/m² K)
R-5 (0.88)	R-13.2 (2.32)	R-7.0 (1.24)	0.142 (0.81)	R-7.4 (1.30)	0.136 (0.77)	R-7.6 (1.33)	0.132 (0.75)
R-10 (1.76)	R-18.2 (3.20)	R-9.9 (1.74)	0.101 (0.58)	R-10.8 (1.90)	0.093 (0.53)	R-11.3 (1.99)	0.089 (0.50)
R-15 (2.64)	R-23.2 (4.08)	R-12.2 (2.15)	0.082 (0.47)	R-13.7 (2.41)	0.073 (0.42)	R-14.6 (2.57)	0.068 (0.39)
R-20 (3.52)	R-28.2 (4.96)	R-14.2 (2.50)	0.070 (0.40)	R-16.3 (2.87)	0.061 (0.35)	R-17.6 (3.10)	0.057 (0.32)
R-25 (4.40)	R-33.2 (5.84)	R-16.1 (2.83)	0.062 (0.35)	R-18.7 (3.30)	0.053 (0.30)	R-20.4 (3.60)	0.049 (0.28)

Temperature Indices

Spacing	T_i	R5	R10	R15	R20	R25	
12"	T_{i1}	0.62	0.69	0.73	0.75	0.77	Min T on sheathing, at girt and stud intersection
	T_{i2}	0.75	0.83	0.87	0.89	0.90	Max T on sheathing, centre of stud cavity between girts
24"	T_{i1}	0.63	0.70	0.73	0.76	0.78	Min T on sheathing, at girt and stud intersection
	T_{i2}	0.77	0.85	0.88	0.90	0.92	Max T on sheathing, centre of stud cavity between girts
36"	T_{i1}	0.63	0.70	0.73	0.76	0.78	Min T on sheathing, at girt and stud intersection
	T_{i2}	0.78	0.86	0.90	0.92	0.93	Max T on sheathing, centre of stud cavity between girts

Detail 5.1.18

Exterior Insulated 3 5/8" x 1 5/8" Steel Stud (16" o.c.) Wall Assembly with Horizontal Clips (24" o.c.) Supporting Metal Cladding – Clear Wall

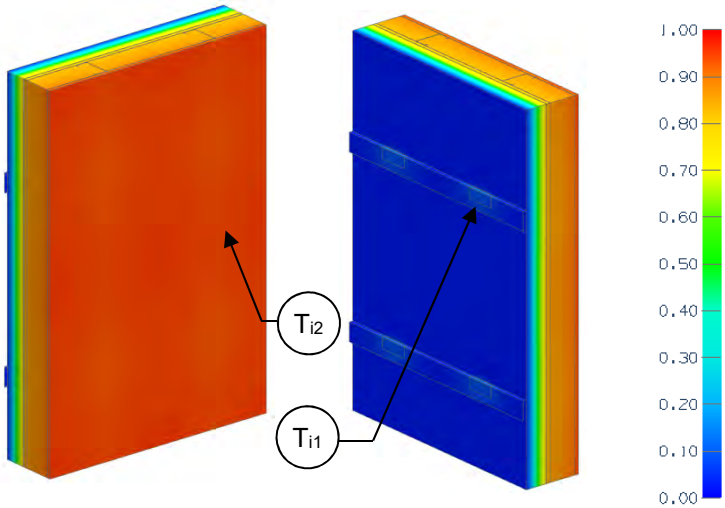

View from Interior View from Exterior

Thermal Performance Indicators

Assembly 1D (Nominal) R-Value	R_{1D}	R-3.2 (0.56 RSI) + exterior insulation
Transmittance / Resistance	U_o, R_o	"clear wall" U- and R-value
Surface Temperature Index[1]	T_i	0 = exterior temperature 1 = interior temperature

[1]Assumptions and limitations for surface temperatures identified in ASHRAE 1365-RP

Nominal (1D) vs. Assembly Performance Indicators

Exterior Insulation 1D R-Value (RSI)	R_{1D} ft²·hr·°F / Btu (m² K / W)	R_o ft²·hr·°F / Btu (m² K / W)	U_o Btu/ft² ·hr ·°F (W/m² K)
R-15 (2.64)	R-18.2 (3.20)	R-14.7 (2.59)	0.068 (0.39)
R-20 (3.52)	R-23.2 (4.08)	R-17.8 (3.13)	0.056 (0.32)
R-25 (4.40)	R-28.2 (4.96)	R-20.6 (3.63)	0.049 (0.28)

Temperature Indices

	R15	R20	R25	
T_{i1}	0.75	0.78	0.80	Min T on sheathing, along girts at stud and clip intersection
T_{i2}	0.88	0.90	0.91	Max T on sheathing at stud away from clip

Detail 5.1.19

Exterior and Interior Insulated 3 5/8" x 1 5/8" Steel Stud (16" o.c.) Wall Assembly with Horizontal Clips (24" o.c.) Supporting Metal Cladding – Clear Wall

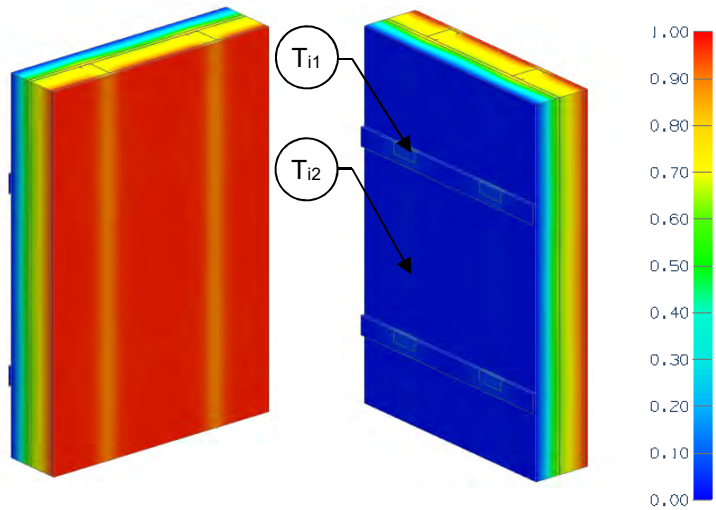

View from Interior View from Exterior

Thermal Performance Indicators

Assembly 1D (Nominal) R-Value	R_{1D}	R-14.4 (2.54 RSI) + exterior insulation
Transmittance / Resistance	U_o, R_o	"clear wall" U- and R-value
Surface Temperature Index[1]	T_i	0 = exterior temperature 1 = interior temperature

[1]Assumptions and limitations for surface temperatures identified in ASHRAE 1365-RP

Nominal (1D) vs. Assembly Performance Indicators

Exterior Insulation 1D R-Value (RSI)	R_{1D} ft²·hr·°F / Btu (m² K / W)	R_o ft²·hr·°F / Btu (m² K / W)	U_o Btu/ft² ·hr ·°F (W/m² K)
R-10 (1.76)	R-24.4 (4.30)	R-17.3 (3.04)	0.058 (0.33)
R-15 (2.64)	R-29.4 (5.18)	R-20.6 (3.62)	0.049 (0.28)
R-20 (3.52)	R-34.4 (6.06)	R-23.6 (4.16)	0.042 (0.24)

Temperature Indices

	R10	R15	R20	
T_{i1}	0.44	0.50	0.55	Min T on sheathing, at stud and girt intersection
T_{i2}	0.69	0.74	0.78	Max T on sheathing, at stud, between girts

Detail 5.1.20

Exterior and Interior Insulated 3 5/8" x 1 5/8" Steel Stud (16" o.c.) Wall Assembly with Vertical Z Clips (16" o.c.) Supporting Stucco Cladding – Clear Wall

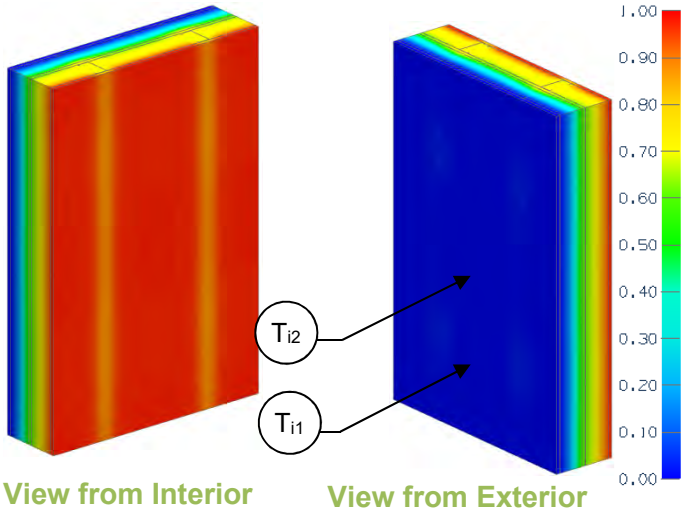

Thermal Performance Indicators

Assembly 1D (Nominal) R Value	R_{1D}	R-14.5 (2.55 RSI) + exterior insulation
Transmittance / Resistance	U_o, R_o	"clear wall" U- and R-value
Surface Temperature Index[1]	T_i	0 = exterior temperature 1 = interior temperature

[1]Assumptions and limitations for surface temperatures identified in ASHRAE 1365-RP

Nominal (1D) vs. Assembly Performance Indicators

Exterior Insulation 1D R-Value (RSI)	R_{1D} ft²·hr·°F / Btu (m² K / W)	R_o ft²·hr·°F / Btu (m² K / W)	U_o Btu/ft² ·hr ·°F (W/m² K)
R-10 (1.76)	R-24.5 (4.31)	R-16.0 (2.82)	0.062 (0.35)
R-15 (2.64)	R-29.5 (5.20)	R-18.6 (3.28)	0.054 (0.30)
R-20 (3.52)	R-34.5 (6.08)	R-21.0 (3.70)	0.048 (0.27)

Temperature Indices

	R10	R15	R20	
T_{i1}	0.45	0.51	0.55	Min T on sheathing, at clip to stud connection
T_{i2}	0.67	0.72	0.75	Max T on sheathing, at stud, between clips

Detail 5.1.21

Exterior Insulated 6” x 1 5/8” Steel Stud (16” o.c.) Wall Assembly with Knight MFI-System (24” o.c.) Supporting Cladding – Clear Wall

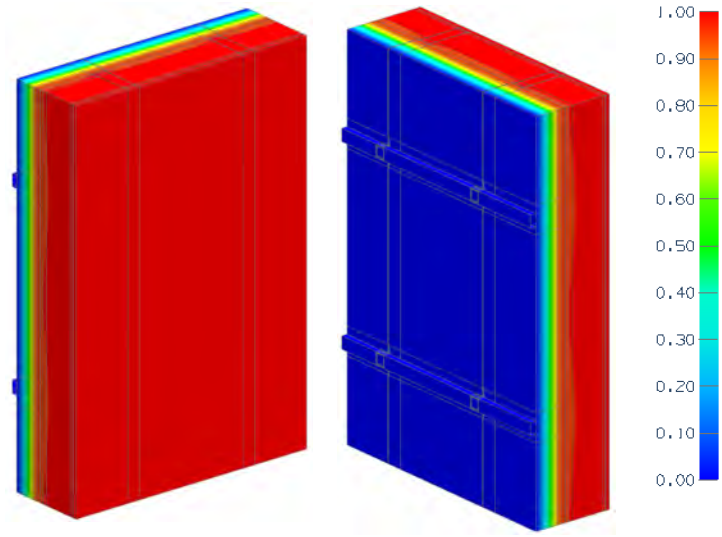

View from Interior View from Exterior

Thermal Performance Indicators

Assembly 1D (Nominal) R-Value	R_{1D}	R-3.2 (0.56 RSI) + exterior insulation
Transmittance / Resistance	U_o, R_o	“clear wall” U- and R-value

Nominal (1D) vs. Assembly Performance Indicators

Exterior Insulation 1D R-Value (RSI)	R_{1D} ft²·hr·°F / Btu (m² K / W)	R_o ft²·hr·°F / Btu (m² K / W)	U_o Btu/ft² ·hr ·°F (W/m² K)
R-8.4 (1.48)	R-11.6 (2.04)	R-10.8 (1.90)	0.093 (0.53)
R-12.6 (2.22)	R-15.8 (2.78)	R-14.1 (2.48)	0.071 (0.40)
R-14.7 (2.59)	R-17.9 (3.15)	R-15.7 (2.77)	0.064 (0.36)
R-16.8 (2.96)	R-20.0 (3.52)	R-17.2 (3.03)	0.058 (0.33)
R-21.0 (3.70)	R-24.2 (4.26)	R-20.1 (3.54)	0.050 (0.28)
R-25.2 (4.44)	R-28.4 (5.00)	R-22.7 (4.00)	0.044 (0.25)

Detail 5.1.22

Exterior and Interior Insulated 6” x 1 5/8” Steel Stud (16” o.c.) Wall Assembly with Knight MFI-System (24” o.c.) Supporting Cladding – Clear Wall

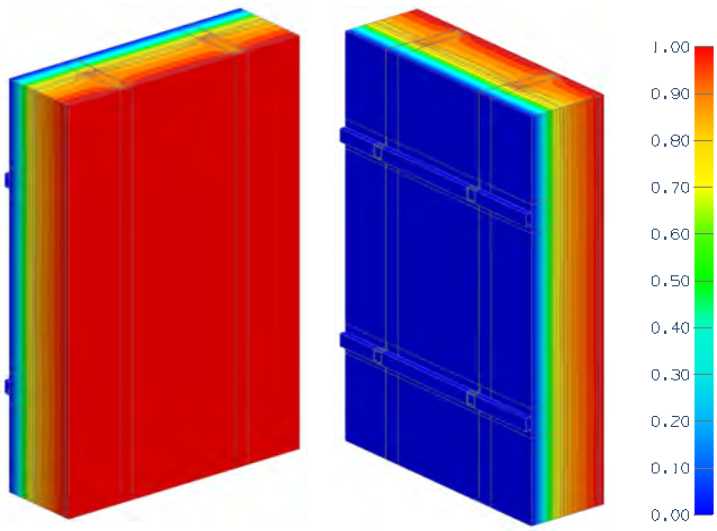

View from Interior View from Exterior

Thermal Performance Indicators

Assembly 1D (Nominal) R-Value	R_{1D}	R-21.3 (3.75 RSI) + exterior insulation
Transmittance / Resistance	U_o, R_o	“clear wall” U- and R-value

Nominal (1D) vs. Assembly Performance Indicators

Exterior Insulation 1D R-Value (RSI)	R_{1D} ft²·hr·ºF / Btu (m² K / W)	R_o ft²·hr·ºF / Btu (m² K / W)	U_o Btu/ft² ·hr ·ºF (W/m² K)
R-8.4 (1.48)	R-29.7 (5.23)	R-19.2 (3.38)	0.052 (0.30)
R-12.6 (2.22)	R-33.9 (5.97)	R-22.5 (3.96)	0.045 (0.26)
R-14.7 (2.59)	R-36.0 (6.34)	R-24.0 (4.23)	0.042 (0.24)
R-16.8 (2.96)	R-38.1 (6.71)	R-25.4 (4.47)	0.039 (0.22)
R-21.0 (3.70)	R-42.3 (7.45)	R-28.2 (4.97)	0.035 (0.20)
R-25.2 (4.44)	R-46.5 (8.19)	R-30.8 (5.42)	0.032 (0.18)

Detail 5.1.23

Exterior Insulated 3 5/8" x 1 5/8" Steel Stud (16" o.c.) Wall Assembly with CL-Talon 300 Clip System Supporting Cladding – Clear Wall

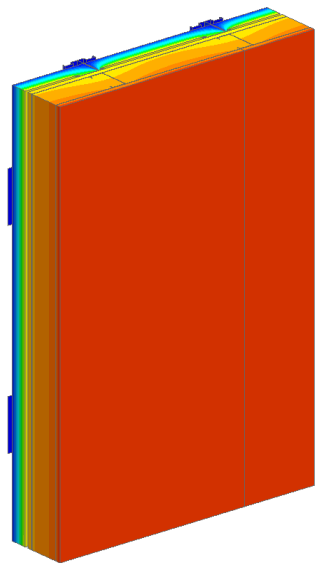

View from Interior

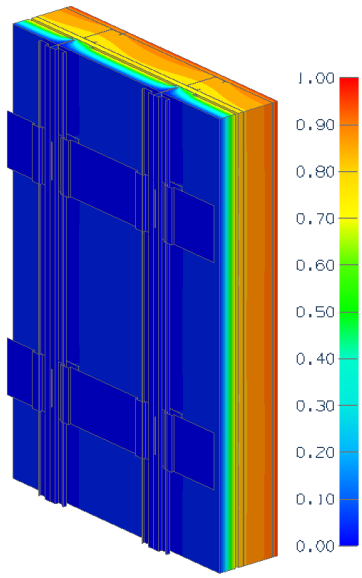

View from Exterior

Thermal Performance Indicators

Assembly 1D (Nominal) R-Value	R_{1D}	R-3.4 (0.60 RSI) + exterior insulation
Transmittance / Resistance	U_o, R_o	"clear field" U- and R-values
Surface Temperature Index[1]	T_i	0 = exterior temperature 1 = interior temperature

[1]Assumptions and limitations for surface temperatures identified in ASHRAE 1365-RP

Nominal (1D) vs. Assembly Performance Indicators

Exterior Insulation 1D R-value (RSI)	R_{1D} ft²·hr·°F / Btu (m² K / W)	24" Vertical Spacing		36" Vertical Spacing		48" Vertical Spacing	
		R_o ft²·hr·°F / Btu (m² K / W)	U_o Btu/ft² ·hr ·°F (W/m² K)	R_o ft²·hr·°F / Btu (m² K / W)	U_o Btu/ft² ·hr ·°F (W/m² K)	R_o ft²·hr·°F / Btu (m² K / W)	U_o Btu/ft² ·hr ·°F (W/m² K)
R-8.4 (1.48)	R-11.8 (2.08)	R-9.1 (1.61)	0.110 (0.622)	R-9.3 (1.63)	0.108 (0.612)	R-9.4 (1.65)	0.107 (0.606)
R-12.6 (2.22)	R-16.0 (2.82)	R-13.7 (2.41)	0.073 (0.416)	R-14.3 (2.52)	0.070 (0.397)	R-14.4 (2.54)	0.069 (0.393)
R-16.8 (2.96)	R-20.2 (3.56)	R-17.6 (3.09)	0.057 (0.323)	R-17.9 (3.15)	0.056 (0.317)	R-18.5 (3.26)	0.054 (0.307)

Detail 5.1.24

Exterior Insulated 3 5/8'' x 1 5/8'' Steel Stud (16'' o.c.) Wall Assembly with Thermally Isolated Aluminum Clip Horizontal Sub-girt System Supporting Cladding – Clear Wall

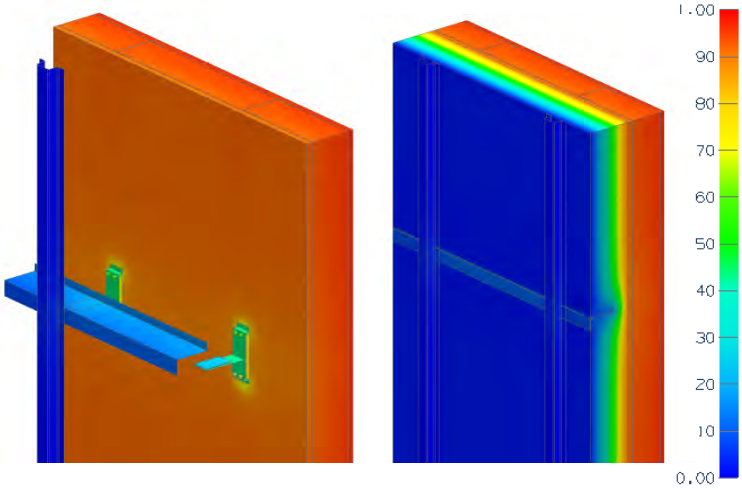

View of Isolated Clips View from Exterior

Thermal Performance Indicators

Assembly 1D (Nominal) R-Value	R_{1Da}	R-3.2 (0.56 RSI) + exterior insulation (without fiberglass batt insulation)
Assembly 1D (Nominal) R-Value	R_{1Db}	R-14.4 (2.54 RSI) + exterior insulation and fiberglass batt insulation[1]
Transmittance / Resistance	U_a, R_a, U_b, R_b	"Clear wall" U- and R-value: a = without batt insulation b = with batt insulation

[1]If insulation in stud cavity is used, R-0.9 insulation for the cavity space is eliminated

Nominal (1D) vs. Assembly Performance Indicators

Clear Wall – Exterior Insulated Assembly

Clip System	Exterior Insulation 1D R-Value (RSI)	R_{1Da} ft²·hr·°F / Btu (m² K / W)	34" Vertical Clip Spacing		41" Vertical Clip Spacing		48" Vertical Clip Spacing	
			R_a ft²·hr·°F / Btu (m² K / W)	U_a Btu/ft² ·hr ·°F (W/m² K)	R_a ft²·hr·°F / Btu (m² K / W)	U_a Btu/ft² ·hr ·°F (W/m² K)	R_a ft²·hr·°F / Btu (m² K / W)	U_a Btu/ft² ·hr ·°F (W/m² K)
T100	R-16.8 (2.96)	R-20.0 (3.52)	R-16.4 (2.89)	0.061 (0.35)	R-16.9 (2.98)	0.059 (0.34)	R-17.3 (3.04)	0.058 (0.33)
T125	R-21.0 (3.70)	R-24.2 (4.26)	R-19.7 (3.48)	0.051 (0.29)	R-20.4 (3.60)	0.049 (0.28)	R-20.9 (3.68)	0.048 (0.27)
T150	R-25.2 (4.44)	R-28.4 (5.00)	R-22.7 (3.99)	0.044 (0.25)	R-23.6 (4.15)	0.042 (0.24)	R-24.2 (4.26)	0.041 (0.24)

Clear Wall – Exterior and Interior Insulated Assembly

Clip System	Exterior Insulation 1D R-Value (RSI)	R_{1Db} ft²·hr·°F / Btu (m² K / W)	34" Vertical Clip Spacing		41" Vertical Clip Spacing		48" Vertical Clip Spacing	
			R_b ft²·hr·°F / Btu (m² K / W)	U_b Btu/ft² ·hr ·°F (W/m² K)	R_b ft²·hr·°F / Btu (m² K / W)	U_b Btu/ft² ·hr ·°F (W/m² K)	R_b ft²·hr·°F / Btu (m² K / W)	U_b Btu/ft² ·hr ·°F (W/m² K)
T100	R-16.8 (2.96)	R-31.2 (5.50)	R-22.2 (3.91)	0.045 (0.26)	R-22.7 (4.00)	0.044 (0.25)	R-22.7 (4.00)	0.044 (0.25)
T125	R-21.0 (3.70)	R-35.4 (6.24)	R-25.0 (4.40)	0.040 (0.23)	R-25.6 (4.52)	0.039 (0.22)	R-26.3 (4.63)	0.038 (0.22)
T150	R-25.2 (4.44)	R-39.6 (6.98)	R-27.8 (4.89)	0.036 (0.20)	R-28.6 (5.03)	0.035 (0.20)	R-29.4 (5.18)	0.034 (0.19)

Detail 5.1.25

Exterior Insulated 3 5/8" x 1/58" Steel Stud (16"o.c.) Wall Assembly with Fiber Reinforced Girts (TAC) Supporting Cladding – Clear Wall

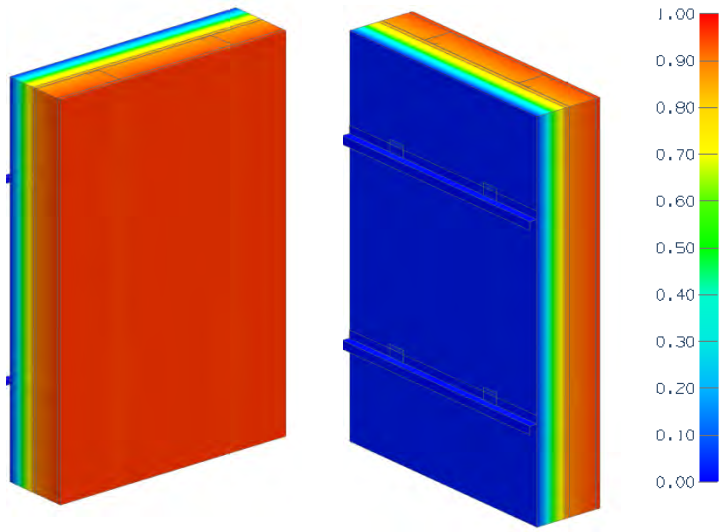

View from Interior View from Exterior

Thermal Performance Indicators

Assembly 1D (Nominal) R-Value	R_{1Da}	R-3.2 (0.56 RSI) + exterior insulation (without fiberglass batt insulation)
Assembly 1D (Nominal) R-Value	R_{1Db}	R-14.4 (2.54 RSI) + exterior insulation and fiberglass batt insulation[1]
Transmittance / Resistance	U_a, R_a, U_b, R_b	"Clear wall" U- and R-value: a = without batt insulation b = with batt insulation

[1]If insulation in stud cavity is used, R-0.9 insulation for the cavity space is eliminated

Nominal (1D) vs. Assembly Performance Indicators

Clear Wall – Without Fiberglass Batt Insulation in Stud Cavity

Exterior Insulation 1D R-Value (RSI)	R_{1Da} ft²·hr·°F / Btu (m² K / W)	24" Vertical Clip Spacing		36" Vertical Clip Spacing		48" Vertical Clip Spacing	
		R_a ft²·hr·°F / Btu (m² K / W)	U_a Btu/ft² ·hr ·°F (W/m² K)	R_a ft²·hr·°F / Btu (m² K / W)	U_a Btu/ft² ·hr ·°F (W/m² K)	R_a ft²·hr·°F / Btu (m² K / W)	U_a Btu/ft² ·hr ·°F (W/m² K)
R-12.6 (2.22)	R-15.8 (2.78)	R-15.2 (2.68)	0.066 (0.37)	R-15.4 (2.70)	0.065 (0.37)	R-15.4 (2.70)	0.065 (0.37)
R-16.8 (3.00)	R-20.0 (3.52)	R-19.2 (3.38)	0.052 (0.30)	R-19.2 (3.45)	0.052 (0.29)	R-19.6 (3.45)	0.051 (0.29)
R-21.0 (3.70)	R-24.2 (4.27)	R-23.3 (4.10)	0.043 (0.24)	R-23.8 (4.17)	0.042 (0.24)	R-23.8 (4.17)	0.042 (0.24)
R-25.2 (4.40)	R-28.4 (5.00)	R-27.8 (4.90)	0.036 (0.21)	R-27.8 (4.76)	0.036 (0.21)	R-27.8 (4.76)	0.036 (0.20)

Clear Wall – With Fiberglass Batt Insulation in Stud Cavity

Exterior Insulation 1D R-Value (RSI)	R_{1Db} ft²·hr·°F / Btu (m² K / W)	24" Vertical Clip Spacing		36" Vertical Clip Spacing		48" Vertical Clip Spacing	
		R_b ft²·hr·°F / Btu (m² K / W)	U_b Btu/ft² ·hr ·°F (W/m² K)	R_b ft²·hr·°F / Btu (m² K / W)	U_b Btu/ft² ·hr ·°F (W/m² K)	R_b ft²·hr·°F / Btu (m² K / W)	U_b Btu/ft² ·hr ·°F (W/m² K)
R-12.6 (2.22)	R-27.0 (4.76)	R-21.3 (3.70)	0.047 (0.27)	R-21.7 (3.85)	0.046 (0.26)	R-21.7 (3.85)	0.046 (0.26)
R-16.8 (3.00)	R-31.2 (5.49)	R-25.0 (4.35)	0.039 (0.22)	R-25.6 (4.55)	0.039 (0.22)	R-25.6 (4.55)	0.039 (0.22)
R-21.0 (3.70)	R-35.4 (6.23)	R-29.4 (5.26)	0.034 (0.19)	R-30.3 (5.26)	0.033 (0.19)	R-30.3 (5.26)	0.033 (0.19)
R-25.2 (4.40)	R-39.6 (6.97)	R-33.3 (5.88)	0.030 (0.17)	R-34.5 (5.88)	0.029 (0.17)	R-34.5 (5.88)	0.029 (0.17)

Detail 5.1.26

Exterior Insulated 3 5/8" x 1 5/8" Steel Stud (16" o.c.) Wall Assembly with Thermally Broken Aluminum Clip Rail System (24" o.c.) Supporting Cladding – Clear Wall

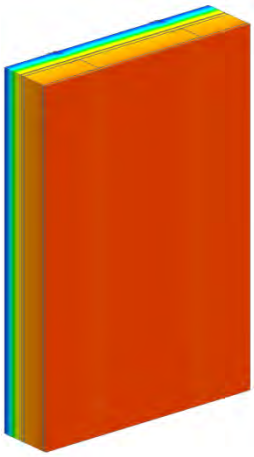

View from Interior

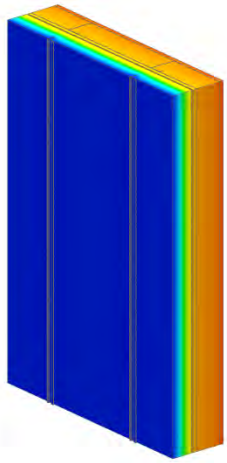

View from Exterior

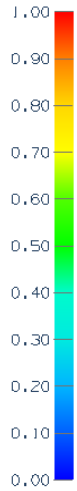

Thermal Performance Indicators

Assembly 1D (Nominal) R-Value	R_{1Da}	R-3.2 (0.56 RSI) + exterior insulation (without fiberglass batt insulation)
Assembly 1D (Nominal) R-Value	R_{1Db}	R-14.4 (2.54 RSI) + exterior insulation and fiberglass batt insulation[1]
Transmittance / Resistance	U_a, R_a, U_b, R_b	"Clear wall" U- and R-value: a = without batt insulation b = with batt insulation

[1]If insulation in stud cavity is used, R-0.9 insulation for the cavity space is eliminated

Nominal (1D) vs. Assembly Performance Indicators

Clear Wall – Without Fiberglass Batt Insulation in Stud Cavity

Exterior Insulation 1D R-Value (RSI)	R_{1Da} ft²·hr·°F / Btu (m² K / W)	24" Vertical Clip Spacing		30" Vertical Clip Spacing		36" Vertical Clip Spacing		42" Vertical Clip Spacing	
		R_a ft²·hr·°F / Btu (m² K / W)	U_a Btu/ft² ·hr ·°F (W/m² K)	R_a ft²·hr·°F / Btu (m² K / W)	U_a Btu/ft² ·hr ·°F (W/m² K)	R_a ft²·hr·°F / Btu (m² K / W)	U_a Btu/ft² ·hr ·°F (W/m² K)	R_a ft²·hr·°F / Btu (m² K / W)	U_a Btu/ft² ·hr ·°F (W/m² K)
R-12.6 (2.22)	R-15.8 (2.78)	R-14.1 (2.47)	0.071 (0.41)	R-14.3 (2.51)	0.070 (0.40)	R-14.5 (2.54)	0.069 (0.39)	R-14.5 (2.56)	0.069 (0.39)
R-16.8 (3.00)	R-20.0 (3.52)	R-16.9 (3.00)	0.059 (0.33)	R-17.5 (3.07)	0.057 (0.33)	R-17.9 (3.13)	0.056 (0.32)	R-17.9 (3.16)	0.056 (0.32)
R-21.0 (3.70)	R-24.2 (4.27)	R-19.6 (3.45)	0.051 (0.29)	R-20.4 (3.57)	0.049 (0.28)	R-20.8 (3.66)	0.048 (0.27)	R-21.3 (3.73)	0.047 (0.27)
R-25.2 (4.40)	R-28.4 (5.00)	R-21.7 (3.86)	0.046 (0.26)	R-22.7 (3.91)	0.044 (0.26)	R-23.8 (4.15)	0.042 (0.24)	R-24.4 (4.26)	0.041 (0.24)

Clear Wall – With Fiberglass Batt Insulation in Stud Cavity

Exterior Insulation 1D R-Value (RSI)	R_{1Db} ft²·hr·°F / Btu (m² K / W)	24" Vertical Clip Spacing		30" Vertical Clip Spacing		36" Vertical Clip Spacing		42" Vertical Clip Spacing	
		R_b ft²·hr·°F / Btu (m² K / W)	U_b Btu/ft² ·hr ·°F (W/m² K)	R_b ft²·hr·°F / Btu (m² K / W)	U_b Btu/ft² ·hr ·°F (W/m² K)	R_b ft²·hr·°F / Btu (m² K / W)	U_b Btu/ft² ·hr ·°F (W/m² K)	R_b ft²·hr·°F / Btu (m² K / W)	U_b Btu/ft² ·hr ·°F (W/m² K)
R-12.6 (2.22)	R-27.0 (4.76)	R-19.2 (3.37)	0.052 (0.30)	R-20.4 (3.60)	0.049 (0.28)	R-20.8 (3.65)	0.048 (0.27)	R-20.8 (3.68)	0.048 (0.27)
R-16.8 (3.00)	R-31.2 (5.49)	R-23.3 (4.05)	0.043 (0.25)	R-23.3 (4.17)	0.043 (0.24)	R-23.8 (4.23)	0.042 (0.24)	R-23.8 (4.29)	0.041 (0.23)
R-21.0 (3.70)	R-35.4 (6.23)	R-25.6 (4.50)	0.039 (0.22)	R-26.3 (4.65)	0.038 (0.22)	R-27.0 (4.76)	0.037 (0.21)	R-27.0 (4.81)	0.037 (0.21)
R-25.2 (4.40)	R-39.6 (6.97)	R-27.8 (4.93)	0.036 (0.20)	R-29.4 (5.10)	0.034 (0.20)	R-30.3 (5.26)	0.033 (0.19)	R30.3 (5.35)	0.033 (0.19)

Detail 5.1.27

Exterior and Interior Insulated 6" x 1 5/8" Steel Stud (16" o.c.) Wall Assembly with High Compression Insulation and Through Insulation Steel Fasteners (12" o.c.) Supporting Cladding, Owens Corning ThermaFiber RainBarrier HC Max Insulation and R-20 Batt Insulation in Stud Cavity – Clear Wall

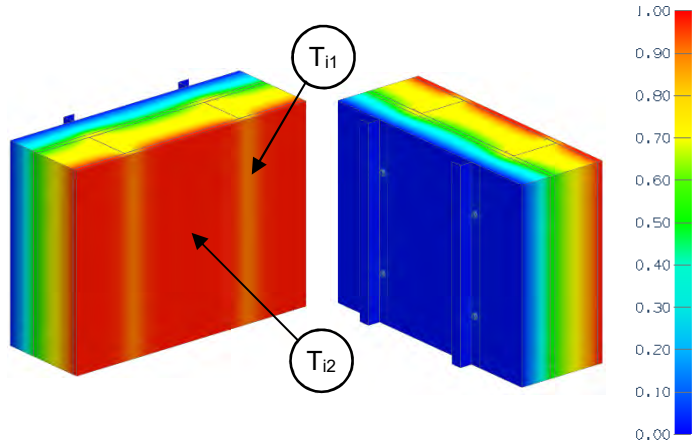

View from Interior View from Exterior

Thermal Performance Indicators

Assembly 1D (Nominal) R-Value	R_{1D}	R-22.5 (3.96 RSI) + exterior insulation
Transmittance / Resistance	U_o, R_o	"clear wall" U- and R-value
Surface Temperature Index	T_i	0 = exterior temperature 1 = interior temperature

Nominal (1D) vs. Assembly Performance Indicators

Exterior Insulation 1D R-Value (RSI)	R_{1D} ft²·hr·°F / Btu (m² K / W)	R_o ft²·hr·°F / Btu (m² K / W)	U_o Btu/ft² ·hr ·°F (W/m² K)
R-4.0 (0.70)	R-26.5 (4.67)	R-15.5 (2.72)	0.065 (0.367)
R-8.0 (1.41)	R-30.5 (5.37)	R-18.5 (3.26)	0.054 (0.307)
R-12.0 (2.11)	R-34.5 (6.08)	R-21.6 (3.80)	0.046 (0.263)
R-16.0 (2.82)	R-38.5 (6.78)	R-24.4 (4.30)	0.041 (0.233)

Temperature Indices

	R4	R12	R16	
T_{i1}	0.27	0.41	0.46	Min T on sheathing, at fastener along studs
T_{i2}	0.22	0.44	0.51	Min T on sheathing, between studs and fasteners

Temperature indices listed for selected scenarios. All other scenarios to be interpolated.

Detail 5.1.28

Exterior and Interior Insulated 6” x 1 5/8” Steel Stud (16” o.c.) Wall Assembly with High Compression Insulation and Through Insulation Steel Fasteners (12” o.c.) Supporting Cladding, Owens Corning ThermaFiber RainBarrier HC Plus 110 Insulation and R-20 Batt Insulation in Stud Cavity – Clear Wall

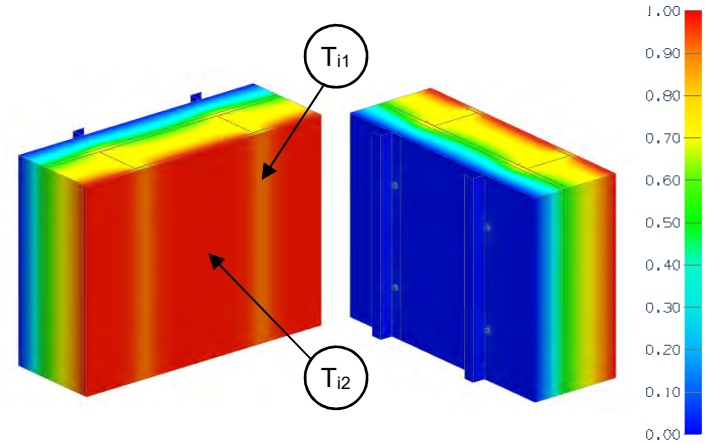

View from Interior View from Exterior

Thermal Performance Indicators

Assembly 1D (Nominal) R-Value	R_{1D}	R-22.5 (3.96 RSI) + exterior insulation
Transmittance / Resistance	U_o, R_o	“clear wall” U- and R-value
Surface Temperature Index	T_i	0 = exterior temperature 1 = interior temperature

Nominal (1D) vs. Assembly Performance Indicators

Exterior Insulation 1D R-Value (RSI)	R_{1D} ft²·hr·°F / Btu (m² K / W)	R_o ft²·hr·°F / Btu (m² K / W)	U_o Btu/ft² ·hr ·°F (W/m² K)
R-4.1 (0.72)	R-26.6 (4.68)	R-15.5 (2.74)	0.064 (0.366)
R-8.2 (1.44)	R-30.7 (5.41)	R-18.6 (3.28)	0.054 (0.305)
R-12.3 (2.17)	R-34.8 (6.13)	R-21.8 (3.83)	0.046 (0.261)
R-16.4 (2.89)	R-38.9 (6.85)	R-24.7 (4.34)	0.041 (0.230)

Temperature Indices

	R4.1	R12.3	R16.4	
T_{i1}	0.27	0.41	0.46	Min T on sheathing, at fastener along studs
T_{i2}	0.23	0.45	0.52	Min T on sheathing, between studs and fasteners

Temperature indices listed for selected scenarios. All other scenarios to be interpolated.

Detail 5.1.29

Exterior and Interior Insulated 6" 1 5/8" Steel Stud (16" o.c.) Wall Assembly with High Compression Insulation and Through Insulation Steel Fasteners (12" o.c.) Supporting Cladding, Owens Corning ThermaFiber RainBarrier 45 Insulation and R-20 Batt Insulation in Stud Cavity – Clear Wall

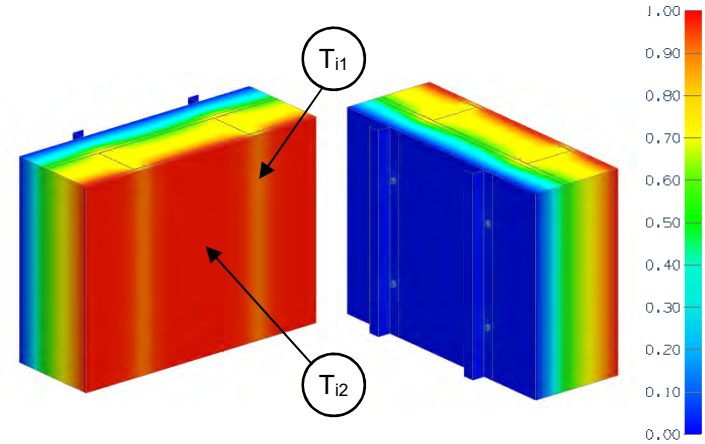

View from Interior View from Exterior

Thermal Performance Indicators

Assembly 1D (Nominal) R-Value	R_{1D}	R-22.5 (3.96 RSI) + exterior insulation
Transmittance / Resistance	U_o, R_o	"clear wall" U- and R-value
Surface Temperature Index	T_i	0 = exterior temperature 1 = interior temperature

Nominal (1D) vs. Assembly Performance Indicators

Exterior Insulation 1D R-Value (RSI)	R_{1D} ft²·hr·°F / Btu (m² K / W)	R_o ft²·hr·°F / Btu (m² K / W)	U_o Btu/ft² ·hr ·°F (W/m² K)
R-4.2 (0.74)	R-26.7 (4.70)	R-15.6 (2.75)	0.064 (0.363)
R-8.4 (1.48)	R-30.9 (5.44)	R-18.8 (3.31)	0.053 (0.302)
R-12.6 (2.22)	R-35.1 (6.18)	R-21.9 (3.86)	0.046 (0.259)
R-16.8 (2.96)	R-39.3 (6.92)	R-24.9 (4.39)	0.040 (0.228)

Temperature Indices

	R4.2	R12.6	R16.8	
T_{i1}	0.27	0.41	0.46	Min T on sheathing, at fastener along studs
T_{i2}	0.23	0.45	0.52	Min T on sheathing, between studs and fasteners

Temperature indices listed for selected scenarios. All other scenarios to be interpolated.

Detail 5.1.30

Exterior and Interior Insulated 6" x 1 5/8" Steel Stud (16" o.c.) Wall Assembly with High Compression Insulation and Through Insulation Steel Fasteners (12" o.c.) Supporting Cladding, Owens Corning ThermaFiber RainBarrier HC Max Insulation and R-22 Batt Insulation in Stud Cavity – Clear Wall

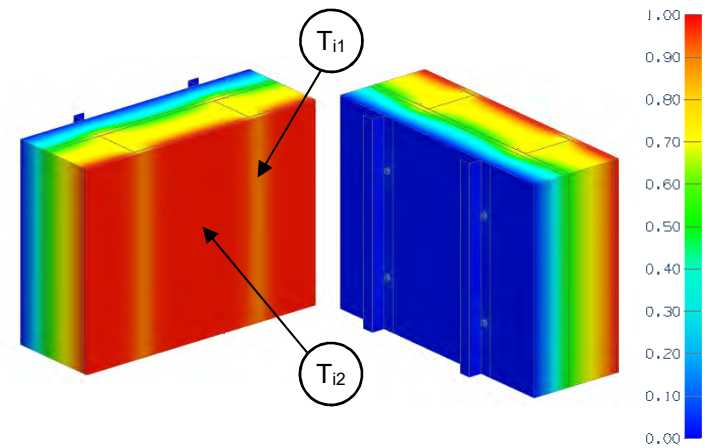

View from Interior View from Exterior

Thermal Performance Indicators

Assembly 1D (Nominal) R-Value	R_{1D}	R-24.5 (4.31 RSI) + exterior insulation
Transmittance / Resistance	U_o, R_o	"clear wall" U- and R-value
Surface Temperature Index	T_i	0 = exterior temperature 1 = interior temperature

Nominal (1D) vs. Assembly Performance Indicators

Exterior Insulation 1D R-Value (RSI)	R_{1D} ft²·hr·°F / Btu (m² K / W)	R_o ft²·hr·°F / Btu (m² K / W)	U_o Btu/ft² ·hr ·°F (W/m² K)
R-4.0 (0.70)	R-28.5 (5.02)	R-16.0 (2.81)	0.063 (0.355)
R-8.0 (1.41)	R-32.5 (5.72)	R-19.0 (3.35)	0.053 (0.299)
R-12.0 (2.11)	R-36.5 (6.43)	R-22.1 (3.89)	0.045 (0.257)
R-16.0 (2.82)	R-40.5 (7.13)	R-24.9 (4.39)	0.040 (0.228)

Temperature Indices

	R4	R12	R16	
T_{i1}	0.27	0.40	0.45	Min T on sheathing, at fastener along studs
T_{i2}	0.21	0.42	0.49	Min T on sheathing, between studs and fasteners

Temperature indices listed for selected scenarios. All other scenarios to be interpolated.

Detail 5.1.31

Exterior and Interior Insulated 6" x 1 5/8" Steel Stud (16" o.c.) Wall Assembly with High Compression Insulation and Through Insulation Steel Fasteners (12" o.c.) Supporting Cladding, Owens Corning ThermaFiber RainBarrier HC Plus 110 Exterior Insulation and R-22 Batt Insulation in Stud Cavity – Clear Wall

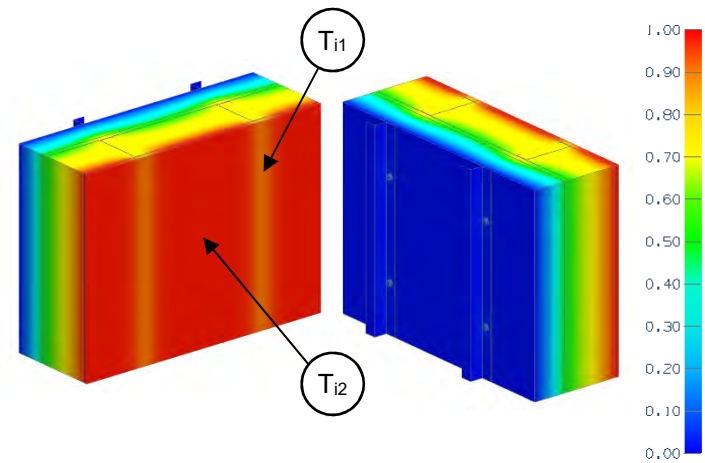

View from Interior View from Exterior

Thermal Performance Indicators

Assembly 1D (Nominal) R-Value	R_{1D}	R-24.5 (4.31 RSI) + exterior insulation
Transmittance / Resistance	U_o, R_o	"clear wall" U- and R-value
Surface Temperature Index	T_i	0 = exterior temperature 1 = interior temperature

Nominal (1D) vs. Assembly Performance Indicators

Exterior Insulation 1D R-Value (RSI)	R_{1D} ft²·hr·°F / Btu (m² K / W)	R_o ft²·hr·°F / Btu (m² K / W)	U_o Btu/ft² ·hr ·°F (W/m² K)
R-4.1 (0.72)	R-28.6 (5.04)	R-16.1 (2.83)	0.062 (0.354)
R-8.2 (1.44)	R-32.7 (5.76)	R-19.2 (3.37)	0.052 (0.296)
R-12.3 (2.17)	R-36.8 (6.48)	R-22.3 (3.92)	0.045 (0.255)
R-16.4 (2.89)	R-40.9 (7.20)	R-25.2 (4.43)	0.040 (0.226)

Temperature Indices

	R4.1	R12.3	R16.4	
T_{i1}	0.27	0.40	0.46	Min T on sheathing, at fastener along studs
T_{i2}	0.21	0.43	0.50	Min T on sheathing, between studs and fasteners

Temperature indices listed for selected scenarios. All other scenarios to be interpolated.

Detail 5.1.32

Exterior and Interior Insulated 6” x 1 5/8” Steel Stud (16” o.c.) Wall Assembly with High Compression Insulation and Through Insulation Steel Fasteners (12” o.c.) Supporting Cladding, Owens Corning ThermaFiber RainBarrier 45 Insulation and R-22 Batt Insulation in Stud Cavity – Clear Wall

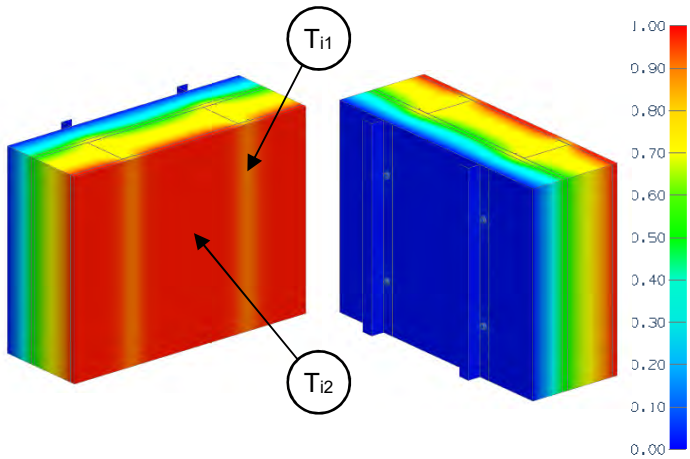

View from Interior View from Exterior

Thermal Performance Indicators

Assembly 1D (Nominal) R-Value	R_{1D}	R-24.5 (4.31 RSI) + exterior insulation
Transmittance / Resistance	U_o, R_o	“clear wall” U- and R-value
Surface Temperature Index	T_i	0 = exterior temperature 1 = interior temperature

Nominal (1D) vs. Assembly Performance Indicators

Exterior Insulation 1D R-Value (RSI)	R_{1D} ft²·hr·°F / Btu (m² K / W)	R_o ft²·hr·°F / Btu (m² K / W)	U_o Btu/ft² ·hr ·°F (W/m² K)
R-4.2 (0.74)	R-28.7 (5.05)	R-16.1 (2.84)	0.062 (0.352)
R-8.4 (1.48)	R-32.9 (5.79)	R-19.3 (3.40)	0.052 (0.294)
R-12.6 (2.22)	R-37.1 (6.53)	R-22.5 (3.95)	0.045 (0.253)
R-16.8 (2.96)	R-41.3 (7.27)	R-25.4 (4.48)	0.039 (0.223)

Temperature Indices

	R4.2	R12.6	R16.8	
T_{i1}	0.27	0.41	0.46	Min T on sheathing, at fastener along studs
T_{i2}	0.22	0.44	0.51	Min T on sheathing, between studs and fasteners

Temperature indices listed for selected scenarios. All other scenarios to be interpolated.

Detail 5.1.33

Exterior and Interior Insulated 6” x 1 5/8” Steel Stud (16” o.c.) Wall Assembly with High Compression Insulation and Through Insulation Steel Fasteners (12” o.c.) Supporting Cladding, Owens Corning ThermaFiber RainBarrier HC Max Insulation and R-24 Batt Insulation in Stud Cavity – Clear Wall

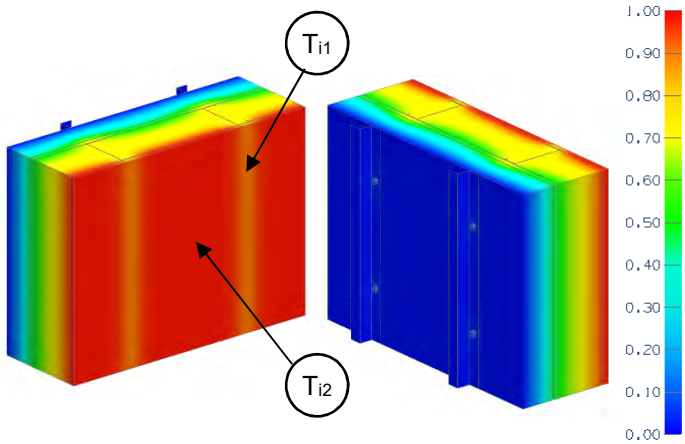

View from Interior View from Exterior

Thermal Performance Indicators

Assembly 1D (Nominal) R-Value	R_{1D}	R-26.4 (4.67 RSI) + exterior insulation
Transmittance / Resistance	U_o, R_o	“clear wall” U- and R-value
Surface Temperature Index	T_i	0 = exterior temperature 1 = interior temperature

Nominal (1D) vs. Assembly Performance Indicators

Exterior Insulation 1D R-Value (RSI)	R_{1D} ft²·hr·°F / Btu (m² K / W)	R_o ft²·hr·°F / Btu (m² K / W)	U_o Btu/ft² ·hr ·°F (W/m² K)
R-4.0 (0.70)	R-30.5 (5.37)	R-16.5 (2.90)	0.061 (0.345)
R-8.0 (1.41)	R-34.5 (6.08)	R-19.5 (3.43)	0.051 (0.291)
R-12.0 (2.11)	R-38.5 (6.78)	R-22.5 (3.97)	0.044 (0.252)
R-16.0 (2.82)	R-42.5 (7.48)	R-25.4 (4.47)	0.039 (0.224)

Temperature Indices

	R4	R12	R16	
T_{i1}	0.26	0.40	0.45	Min T on sheathing, at fastener along studs
T_{i2}	0.20	0.41	0.48	Min T on sheathing, between studs and fasteners

Temperature indices listed for selected scenarios. All other scenarios to be interpolated.

Detail 5.1.34

Exterior and Interior Insulated 6" x 1 5/8" Steel Stud (16" o.c.) Wall Assembly with High Compression Insulation and Through Insulation Steel Fasteners (12" o.c.) Supporting Cladding, Owens Corning ThermaFiber RainBarrier HC Plus 110 Exterior Insulation and R-24 Batt Insulation in Stud Cavity – Clear Wall

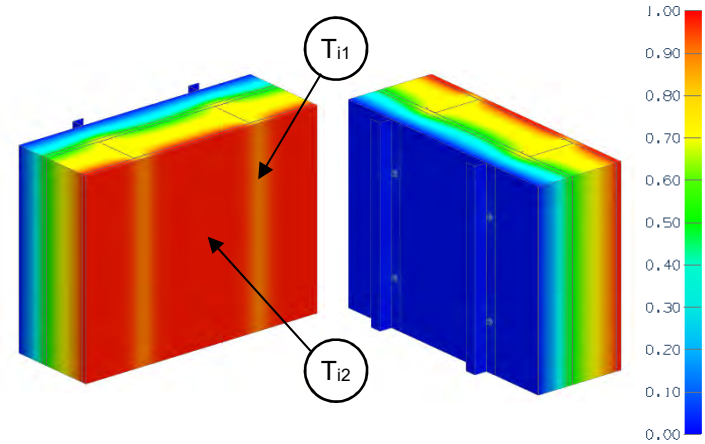

View from Interior View from Exterior

Thermal Performance Indicators

Assembly 1D (Nominal) R-Value	R_{1D}	R-26.4 (4.67 RSI) + exterior insulation
Transmittance / Resistance	U_o, R_o	"clear wall" U- and R-value
Surface Temperature Index	T_i	0 = exterior temperature 1 = interior temperature

Nominal (1D) vs. Assembly Performance Indicators

Exterior Insulation 1D R-Value (RSI)	R_{1D} ft²·hr·°F / Btu (m² K / W)	R_o ft²·hr·°F / Btu (m² K / W)	U_o Btu/ft² ·hr ·°F (W/m² K)
R-4.1 (0.72)	R-30.6 (5.39)	R-16.5 (2.91)	0.060 (0.344)
R-8.2 (1.44)	R-34.7 (6.11)	R-19.6 (3.46)	0.051 (0.289)
R-12.3 (2.17)	R-38.8 (6.83)	R-22.7 (4.01)	0.044 (0.250)
R-16.4 (2.89)	R-42.9 (7.55)	R-25.6 (4.51)	0.039 (0.222)

Temperature Indices

	R4.1	R12.3	R16.4	
T_{i1}	0.27	0.40	0.45	Min T on sheathing, at fastener along studs
T_{i2}	0.20	0.42	0.48	Min T on sheathing, between studs and fasteners

Temperature indices listed for selected scenarios. All other scenarios to be interpolated.

Detail 5.1.35

Exterior and Interior Insulated 6" x 1 5/8" Steel Stud (16" o.c.) Wall Assembly with High Compression Insulation and Through Insulation Steel Fasteners (12" o.c.) Supporting Cladding, Owens Corning ThermaFiber RainBarrier 45 Insulation and R-24 Batt Insulation in Stud Cavity – Clear Wall

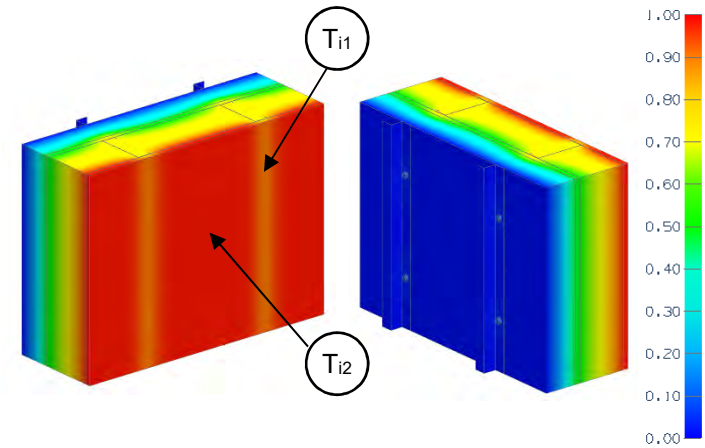

View from Interior View from Exterior

Thermal Performance Indicators

Assembly 1D (Nominal) R-Value	R_{1D}	R-26.4 (4.67 RSI) + exterior insulation
Transmittance / Resistance	U_o, R_o	"clear wall" U- and R-value
Surface Temperature Index	T_i	0 = exterior temperature 1 = interior temperature

Nominal (1D) vs. Assembly Performance Indicators

Exterior Insulation 1D R-Value (RSI)	R_{1D} ft²·hr·°F / Btu (m² K / W)	R_o ft²·hr·°F / Btu (m² K / W)	U_o Btu/ft² ·hr ·°F (W/m² K)
R-4.2 (0.74)	R-30.7 (5.41)	R-16.6 (2.93)	0.060 (0.342)
R-8.4 (1.48)	R-34.9 (6.15)	R-19.8 (3.48)	0.051 (0.287)
R-12.6 (2.22)	R-39.1 (6.89)	R-22.9 (4.04)	0.044 (0.248)
R-16.8 (2.96)	R-43.3 (7.63)	R-25.9 (4.56)	0.039 (0.219)

Temperature Indices

	R4.2	R12.6	R16.8	
T_{i1}	0.27	0.40	0.45	Min T on sheathing, at fastener along studs
T_{i2}	0.21	0.42	0.49	Min T on sheathing, between studs and fasteners

Temperature indices listed for selected scenarios. All other scenarios to be interpolated.

.

Detail 5.1.36

Exterior and Interior Insulated 6” x 1 5/8” Steel Stud (16” o.c.) Wall Assembly with Knight CI-System (8” o.c.) – Clear Wall

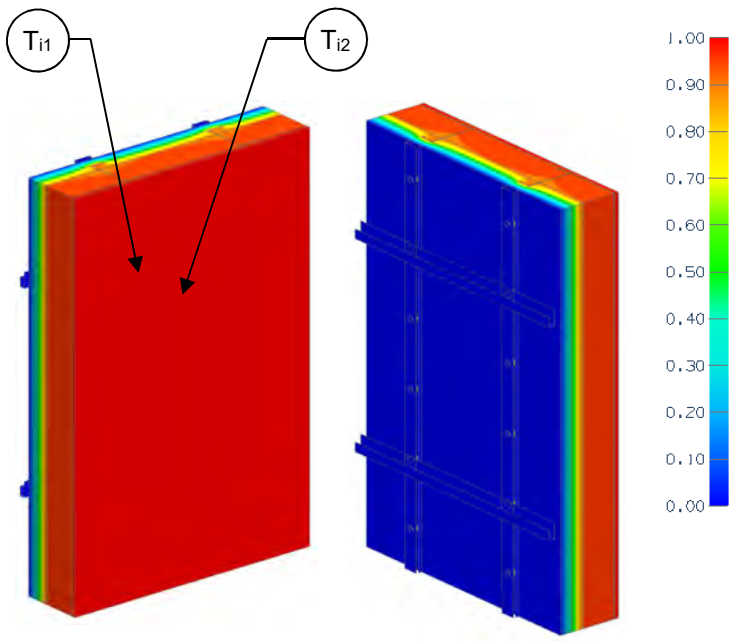

View from Interior View from Exterior

Thermal Performance Indicators

Assembly 1D (Nominal) R-Value	R_{1D}	R-12.6 (2.22 RSI) + exterior insulation
Transmittance / Resistance without Anomaly	U_o, R_o	“clear wall” U- and R-value
Surface Temperature Index[1]	T_i	0 = exterior temperature 1 = interior temperature

[1]Assumptions and limitations for surface temperatures identified in ASHRAE 1365-RP

Nominal (1D) vs. Assembly Performance Indicators

Exterior Insulation 1D R-Value (RSI)	R_{1D} ft²·hr·°F / Btu (m² K / W)	R_o ft²·hr·°F / Btu (m² K / W)	U_o Btu/ft² ·hr ·°F (W/m² K)
R-10.1 (1.78)	R-22.7 (4.00)	R-18.0 (3.17)	0.056 (0.32)
R-19.0 (3.35)	R-31.6 (5.57)	R-25.6 (4.51)	0.039 (0.22)

Temperature Indices

	R10	R19	
T_{i1}	0.89	0.92	Min T on sprayfoam, at fasteners along studs
T_{i2}	0.90	0.93	Max T on sprayfoam, between studs

Detail 5.1.37

Exterior and Interior Insulated 6” x 1 5/8” Steel Stud (16” o.c.) Wall Assembly with Knight CI-System (16” o.c.) – Clear Wall

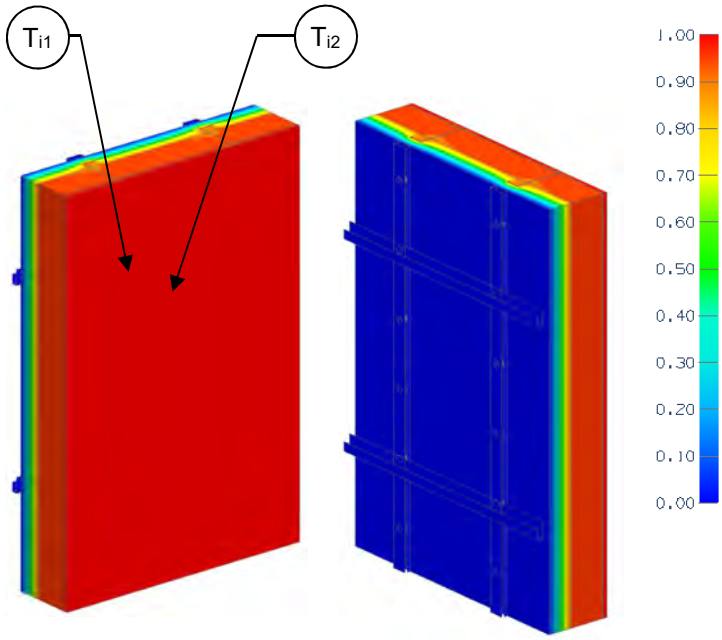

View from Interior View from Exterior

Thermal Performance Indicators

Assembly 1D (Nominal) R-Value	R_{1D}	R-12.6 (2.22 RSI) + exterior insulation
Transmittance / Resistance without Anomaly	U_o, R_o	“clear wall” U- and R-value
Surface Temperature Index[1]	T_i	0 = exterior temperature 1 = interior temperature

[1]Assumptions and limitations for surface temperatures identified in ASHRAE 1365-RP

Nominal (1D) vs. Assembly Performance Indicators

Exterior Insulation 1D R-Value (RSI)	R_{1D} ft²·hr·°F / Btu (m² K / W)	R_o ft²·hr·°F / Btu (m² K / W)	U_o Btu/ft² ·hr ·°F (W/m² K)
R-10.1 (1.78)	R-22.7 (4.00)	R-18.8 (3.31)	0.053 (0.30)
R-19.0 (3.35)	R-31.6 (5.57)	R-27.0 (4.76)	0.037 (0.21)

Temperature Indices

	R10	R19	
T_{i1}	0.89	0.92	Min T on sprayfoam, at fasteners along studs
T_{i2}	0.90	0.93	Max T on sprayfoam, between studs

Detail 5.1.38

Exterior Insulated 6” x 1 5/8” Steel Stud (16” o.c.) Wall Assembly with Knight CI-System (8” o.c.) – Clear Wall

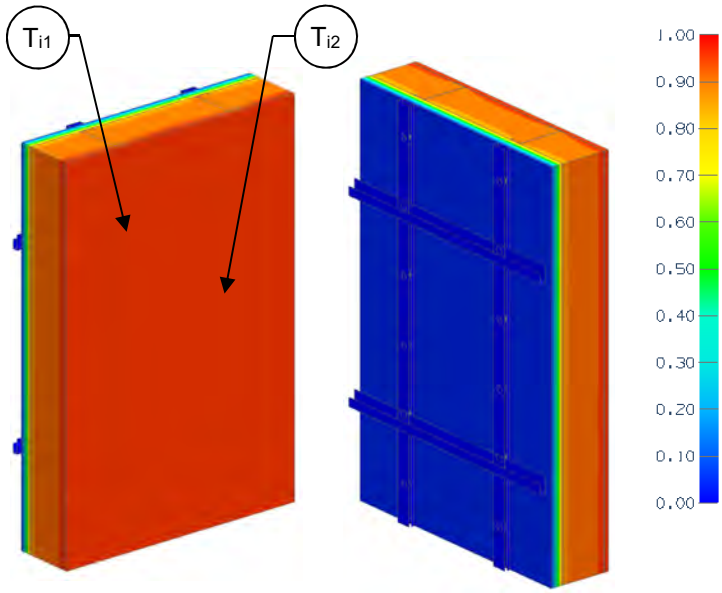

View from Interior View from Exterior

Thermal Performance Indicators

Assembly 1D (Nominal) R-Value	R_{1D}	R-2.8 (0.49 RSI) + exterior insulation
Transmittance / Resistance without Anomaly	U_o, R_o	“clear wall” U- and R-value
Surface Temperature Index[1]	T_i	0 = exterior temperature 1 = interior temperature

[1]Assumptions and limitations for surface temperatures identified in ASHRAE 1365-RP

Nominal (1D) vs. Assembly Performance Indicators

Exterior Insulation 1D R-Value (RSI)	R_{1D} ft²·hr·°F / Btu (m² K / W)	R_o ft²·hr·°F / Btu (m² K / W)	U_o Btu/ft² ·hr ·°F (W/m² K)
R-10.1 (1.78)	R-12.9 (2.27)	R-12.5 (2.20)	0.080 (0.45)
R-19.0 (3.35)	R-21.8 (3.84)	R-20.7 (3.65)	0.048 (0.27)

Temperature Indices

	R10	R19	
T_{i1}	0.61	0.68	Min T on exterior insulation, around fasteners
T_{i2}	0.85	0.91	Max T on exterior insulation, along studs

Detail 5.1.39

Exterior Insulated 3 5/8" x 1 5/8" Steel Stud (16" o.c.) Wall Assembly with R-TEC CI Bracket System Supporting Vertical Sub-girts – Clear Wall

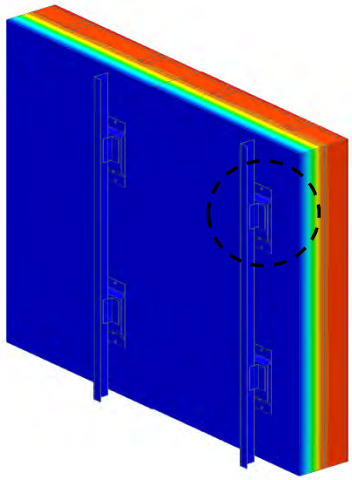

View from Exterior

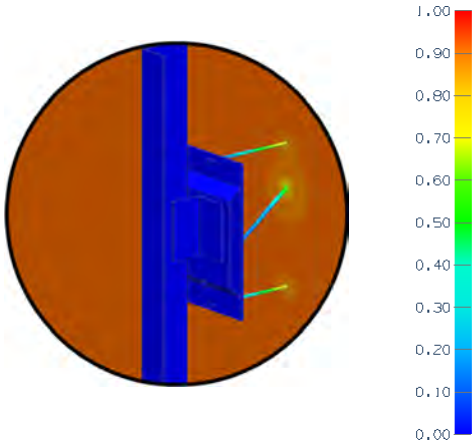

View of Bracket

Thermal Performance Indicators

Assembly 1D (Nominal) R-Value	R_{1D}	R-3.2 (0.56 RSI) + exterior insulation
Transmittance / Resistance	U_o, R_o	"Clear wall" U- and R-value

Nominal (1D) vs. Assembly Performance Indicators

Exterior Insulation 1D R-Value (RSI)	R_{1D} ft²·hr·°F / Btu (m² K / W)	24" Vertical Clip Spacing		36" Vertical Clip Spacing		48" Vertical Clip Spacing	
		R_o ft²·hr·°F / Btu (m² K / W)	U_o Btu/ft² ·hr ·°F (W/m² K)	R_o ft²·hr·°F / Btu (m² K / W)	U_o Btu/ft² ·hr ·°F (W/m² K)	R_o ft²·hr·°F / Btu (m² K / W)	U_o Btu/ft² ·hr ·°F (W/m² K)
12.6 (2.22)	15.8 (2.78)	R-14.7 (2.59)	0.068 (0.387)	R-15.0 (2.65)	0.067 (0.378)	R-15.2 (2.68)	0.066 (0.374)
16.8 (2.96)	20.0 (3.52)	R-18.7 (3.29)	0.053 (0.304)	R-19.2 (3.38)	0.052 (0.296)	R-19.4 (3.42)	0.051 (0.292)
21.0 (3.70)	24.2 (4.26)	R-22.7 (3.99)	0.044 (0.250)	R-23.1 (4.07)	0.043 (0.246)	R-23.5 (4.13)	0.043 (0.242)
25.2 (4.44)	28.4 (5.00)	R-26.5 (4.67)	0.038 (0.214)	R-27.3 (4.8)	0.037 (0.208)	R-27.6 (4.87)	0.036 (0.206)

Detail 5.1.40

Interior and Exterior Insulated 3 5/8" x 1 5/8" Steel Stud (16" o.c.) Wall Assembly with R-TEC CI Bracket System Supporting Vertical Sub-girts – Clear Wall

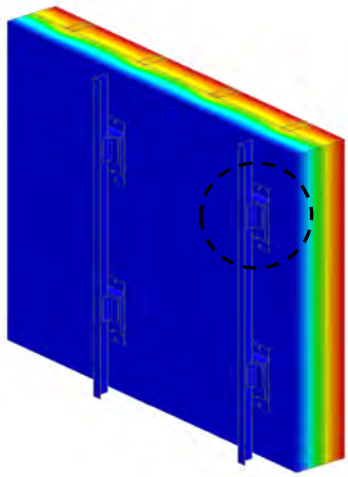

View from Exterior

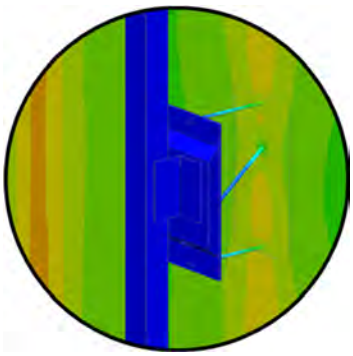

View of Bracket

Thermal Performance Indicators

Assembly 1D (Nominal) R-Value	R_{1D}	R-15.3 (2.69 RSI) + exterior insulation
Transmittance / Resistance	U_o, R_o	"Clear wall" U- and R-value

Nominal (1D) vs. Assembly Performance Indicators

Clear Wall – With Fiberglass Batt Insulation in Stud Cavity

Exterior Insulation 1D R-Value (RSI)	R_{1Db} ft²·hr·°F / Btu (m² K / W)	24" Vertical Clip Spacing		36" Vertical Clip Spacing		48" Vertical Clip Spacing	
		R_o ft²·hr·°F / Btu (m² K / W)	U_o Btu/ft² ·hr ·°F (W/m² K)	R_o ft²·hr·°F / Btu (m² K / W)	U_o Btu/ft² ·hr ·°F (W/m² K)	R_o ft²·hr·°F / Btu (m² K / W)	U_o Btu/ft² ·hr ·°F (W/m² K)
12.6 (2.22)	27.9 (4.91)	R-21.3 (3.74)	0.047 (0.267)	R-21.6 (3.80)	0.046 (0.263)	R-21.8 (3.84)	0.046 (0.261)
16.8 (2.96)	32.1 (5.65)	R-25.4 (4.47)	0.039 (0.224)	R-25.8 (4.54)	0.039 (0.220)	R-26.1 (4.59)	0.038 (0.218)
21.0 (3.70)	36.3 (6.39)	R-29.3 (5.16)	0.034 (0.194)	R-29.9 (5.27)	0.033 (0.190)	R-30.0 (5.29)	0.033 (0.189)
25.2 (4.44)	40.5 (7.13)	R-33.4 (5.88)	0.030 (0.170)	R-33.7 (5.93)	0.030 (0.169)	R-34.2 (6.02)	0.029 (0.166)

Detail 5.1.41

Exterior Insulated 3 5/8” x 1 5/8” Steel Stud (16” o.c.) Wall Assembly with Thermally Broken ISO Clip System Supporting Vertical Sub-girts – Clear Wall

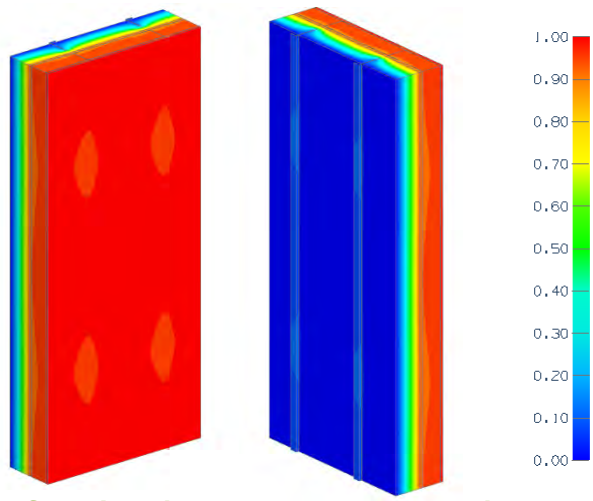

View from Interior View from Exterior

Thermal Performance Indicators

Assembly 1D (Nominal) R-Value	R_{1D}	R-3.2 (0.56 RSI) + exterior insulation
Transmittance / Resistance	U_o, R_o	“Clear wall” U- and R-value

Nominal (1D) vs. Assembly Performance Indicators

Exterior Insulation 1D R-Value (RSI)	R_{1D} ft²·hr·°F / Btu (m² K / W)	24” Vertical Clip Spacing		36” Vertical Clip Spacing		48” Vertical Clip Spacing	
		R_o ft²·hr·°F / Btu (m² K / W)	U_o Btu/ft² ·hr ·°F (W/m² K)	R_o ft²·hr·°F / Btu (m² K / W)	U_o Btu/ft² ·hr ·°F (W/m² K)	R_o ft²·hr·°F / Btu (m² K / W)	U_o Btu/ft² ·hr ·°F (W/m² K)
16.8 (2.96)	20 (3.52)	R-14.3 (2.51)	0.070 (0.398)	R-15.1 (2.66)	0.066 (0.376)	R-15.6 (2.75)	0.064 (0.363)
21.0 (3.70)	24.2 (4.26)	R-15.8 (2.78)	0.063 (0.360)	R-16.7 (2.94)	0.060 (0.340)	R-17.4 (3.06)	0.058 (0.327)
25.2 (4.44)	28.4 (5.00)	R-17.0 (2.99)	0.059 (0.334)	R-18.0 (3.18)	0.055 (0.315)	R-18.8 (3.31)	0.053 (0.302)

Detail 5.1.42

Exterior Insulated 3 5/8" x 1 5/8" Steel Stud (16" o.c.) Wall Assembly with Thermally Broken ISO Clip System Supporting Horizontal Sub-girts – Clear Wall

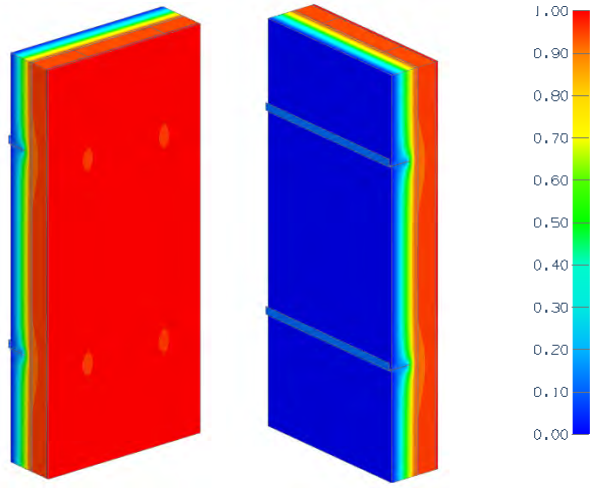

View from Interior View from Exterior

Thermal Performance Indicators

Assembly 1D (Nominal) R-Value	R_{1D}	R-3.2 (0.56 RSI) + exterior insulation
Transmittance / Resistance	U_o, R_o	"Clear wall" U- and R-value

Nominal (1D) vs. Assembly Performance Indicators

Stud Spacing	Exterior Insulation 1D R-Value (RSI)	R_{1D} ft²·hr·°F / Btu (m² K / W)	24" Vertical Clip Spacing		36" Vertical Clip Spacing		48" Vertical Clip Spacing		60" Vertical Clip Spacing	
			R_o ft²·hr·°F / Btu (m² K / W)	U_o Btu/ft² ·hr ·°F (W/m² K)	R_o ft²·hr·°F / Btu (m² K / W)	U_o Btu/ft² ·hr ·°F (W/m² K)	R_o ft²·hr·°F / Btu (m² K / W)	U_o Btu/ft² ·hr ·°F (W/m² K)	R_o ft²·hr·°F / Btu (m² K / W)	U_o Btu/ft² ·hr ·°F (W/m² K)
16" o.c.	16.8 (2.96)	20 (3.52)	R-15.1 (2.65)	0.066 (0.377)	R-16.4 (2.88)	0.061 (0.347)	R-17.2 (3.02)	0.058 (0.331)	R-17.7 (3.12)	0.057 (0.321)
	21.0 (3.70)	24.2 (4.26)	R-16.9 (2.98)	0.059 (0.335)	R-18.7 (3.3)	0.053 (0.303)	R-19.8 (3.5)	0.050 (0.286)	R-20.6 (3.64)	0.048 (0.275)
	25.2 (4.44)	28.4 (5.00)	R-18.5 (3.26)	0.054 (0.307)	R-20.9 (3.67)	0.048 (0.273)	R-22.3 (3.93)	0.045 (0.254)	R-23.4 (4.12)	0.043 (0.243)
24" o.c.	16.8 (2.96)	20 (3.52)	R-16.0 (2.82)	0.062 (0.354)	R-17.1 (3.01)	0.058 (0.332)	R-17.8 (3.13)	0.056 (0.319)	R-18.2 (3.21)	0.055 (0.312)
	21.0 (3.70)	24.2 (4.26)	R-18.1 (3.19)	0.055 (0.314)	R-19.7 (3.47)	0.051 (0.289)	R-20.7 (3.64)	0.048 (0.275)	R-21.3 (3.75)	0.047 (0.266)
	25.2 (4.44)	28.4 (5.00)	R-19.9 (3.50)	0.050 (0.286)	R-22.0 (3.87)	0.045 (0.258)	R-23.3 (4.10)	0.043 (0.244)	R-24.2 (4.26)	0.041 (0.235)

Detail 5.1.43

Interior and Exterior Insulated 3 5/8" x 1 5/8" Steel Stud (16" o.c.) Wall Assembly with Thermally Broken ISO Clip System Supporting Vertical Sub-girts – Clear Wall

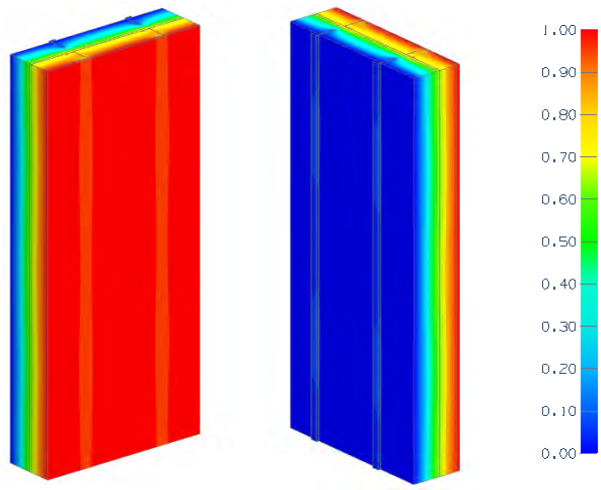

View from Interior View from Exterior

Thermal Performance Indicators

Assembly 1D (Nominal) R-Value	R_{1D}	R-14.3 (2.52 RSI) + exterior insulation
Transmittance / Resistance	U_o, R_o	"Clear wall" U- and R-value

Nominal (1D) vs. Assembly Performance Indicators

Clear Wall – With Fiberglass Batt Insulation in Stud Cavity

Exterior Insulation 1D R-Value (RSI)	R_{1D} ft²·hr·°F / Btu (m² K / W)	24" Vertical Clip Spacing		36" Vertical Clip Spacing		48" Vertical Clip Spacing		60" Vertical Clip Spacing	
		R_o ft²·hr·°F / Btu (m² K / W)	U_o Btu/ft² ·hr ·°F (W/m² K)	R_o ft²·hr·°F / Btu (m² K / W)	U_o Btu/ft² ·hr ·°F (W/m² K)	R_o ft²·hr·°F / Btu (m² K / W)	U_o Btu/ft² ·hr ·°F (W/m² K)	R_o ft²·hr·°F / Btu (m² K / W)	U_o Btu/ft² ·hr ·°F (W/m² K)
16.8 (2.96)	31.1 (5.48)	R-19.6 (3.46)	0.051 (0.289)	R-20.7 (3.64)	0.048 (0.274)	R-21.4 (3.76)	0.047 (0.266)	R-21.6 (3.80)[1]	0.046 (0.263)[1]
21.0 (3.70)	35.3 (6.22)	R-21.0 (3.7)	0.048 (0.270)	R-22.2 (3.92)	0.045 (0.255)	R-23.0 (4.05)	0.043 (0.247)	R-23.2 (4.08)[1]	0.043 (0.245)[1]
25.2 (4.44)	39.5 (6.96)	R-22.2 (3.91)	0.045 (0.255)	R-23.5 (4.14)	0.043 (0.241)	R-24.4 (4.29)	0.041 (0.233)	R-24.7 (4.35)[1]	0.040 (0.230)[1]

[1] Values were interpolated and not explicitly modelled

Detail 5.1.44

Interior and Exterior Insulated 3 5/8" x 1 5/8" Steel Stud (16" o.c.) Wall Assembly with Thermally Broken ISO Clip System Supporting Horizontal Sub-girts – Clear Wall

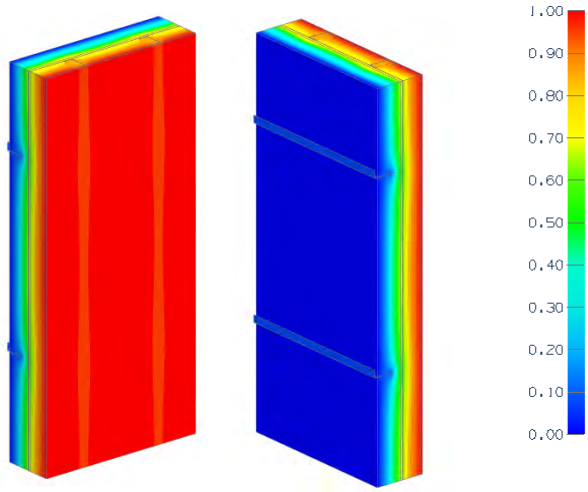

View from Interior View from Exterior

Thermal Performance Indicators

Assembly 1D (Nominal) R-Value	R_{1D}	R-14.3 (2.52 RSI) + exterior insulation
Transmittance / Resistance	U_o, R_o	"Clear wall" U- and R-value

Nominal (1D) vs. Assembly Performance Indicators

Stud Spacing	Exterior Insulation 1D R-Value (RSI)	R_{1D} ft²·hr·°F / Btu (m² K / W)	24" Vertical Clip Spacing		36" Vertical Clip Spacing		48" Vertical Clip Spacing		60" Vertical Clip Spacing	
			R_o ft²·hr·°F / Btu (m² K / W)	U_o Btu/ft² ·hr ·°F (W/m² K)	R_o ft²·hr·°F / Btu (m² K / W)	U_o Btu/ft² ·hr ·°F (W/m² K)	R_o ft²·hr·°F / Btu (m² K / W)	U_o Btu/ft² ·hr ·°F (W/m² K)	R_o ft²·hr·°F / Btu (m² K / W)	U_o Btu/ft² ·hr ·°F (W/m² K)
16" o.c.	16.8 (2.96)	31.1 (5.48)	R-20.8 (3.66)	0.048 (0.273)	R-22.3 (3.92)	0.045 (0.255)	R-23.1 (4.08)	0.043 (0.245)	R-23.8 (4.19)	0.042 (0.239)
	21.0 (3.70)	35.3 (6.22)	R-22.6 (3.98)	0.044 (0.251)	R-24.6 (4.34)	0.041 (0.231)	R-25.9 (4.55)	0.039 (0.220)	R-26.7 (4.71)	0.037 (0.212)
	25.2 (4.44)	39.5 (6.96)	R-24.2 (4.26)	0.041 (0.235)	R-26.8 (4.71)	0.037 (0.212)	R-28.4 (5.00)	0.035 (0.200)	R-29.5 (5.20)	0.034 (0.192)
24" o.c.	16.8 (2.96)	31.1 (5.48)	R-23.0 (4.04)	0.044 (0.247)	R-24.3 (4.28)	0.041 (0.234)	R-25.1 (4.42)	0.040 (0.226)	R-25.6 (4.51)	0.039 (0.222)
	21.0 (3.70)	35.3 (6.22)	R-25.0 (4.40)	0.040 (0.227)	R-26.8 (4.73)	0.037 (0.211)	R-28.0 (4.93)	0.036 (0.203)	R-28.7 (5.06)	0.035 (0.198)
	25.2 (4.44)	39.5 (6.96)	R-26.8 (4.71)	0.037 (0.212)	R-29.2 (5.14)	0.034 (0.195)	R-30.6 (5.40)	0.033 (0.185)	R-31.7 (5.58)	0.032 (0.179)

Detail 5.1.45

Exterior Insulated 3 5/8” x 1 5/8” Steel Stud (16” o.c.) Wall Assembly with Thermally Broken ISO Clip System (16” o.c.) Supporting Horizontal and Vertical Sub-girts – Clear Wall

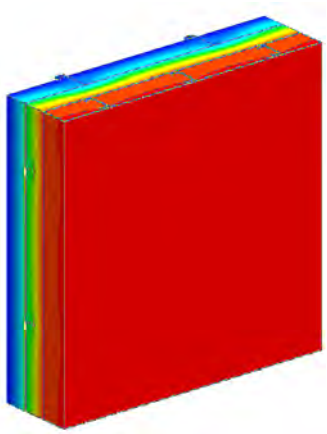

View from Interior

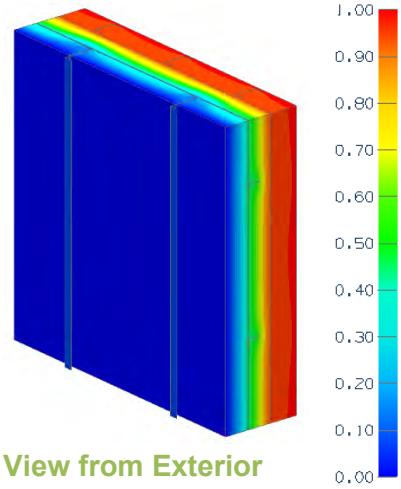

View from Exterior

Thermal Performance Indicators

Assembly 1D (Nominal) R-Value	R_{1D}	R-3.2 (0.56 RSI) + insulation
Transmittance / Resistance without Anomaly	U_o, R_o	“clear field” U- and R-value, without roof anchor
Transmittance / Resistance	U, R	U- and R-values for overall assembly
Surface Temperature Index[1]	T_i	0 = exterior temperature 1 = interior temperature

[1]Assumptions and limitations for surface temperatures identified in ASHRAE 1365-RP

Nominal (1D) vs. Assembly Performance Indicators

Vertical Girt Spacing	Base Layer Exterior Insulation 1D R-Value (RSI)	Outer Layer Exterior Insulation 1D R-Value (RSI)	R_{1D} ft²·hr·°F / Btu (m² K / W)	24” Vertical Clip Spacing		40” Vertical Clip Spacing		60” Vertical Clip Spacing	
				R_o ft²·hr·°F / Btu (m² K / W)	U_o Btu/ft² ·hr ·°F (W/m² K)	R_o ft²·hr·°F / Btu (m² K / W)	U_o Btu/ft² ·hr ·°F (W/m² K)	R_o ft²·hr·°F / Btu (m² K / W)	U_o Btu/ft² ·hr ·°F (W/m² K)
24”	R-16.8 (2.96)	R-12.6 (2.22)	R-32.6 (5.74)	R-21.9 (3.85)	0.046 (0.26)	R-23.9 (4.22)	0.042 (0.24)	R-25.2 (4.43)	0.040 (0.23)
	R-16.8 (2.96)	R-16.8 (2.96)	R-36.8 (6.48)	R-23.1 (4.07)	0.043 (0.25)	R-25.3 (4.45)	0.040 (0.23)	R-26.6 (4.68)	0.038 (0.21)
40”	R-16.8 (2.96)	R-12.6 (2.22)	R-32.6 (5.74)	R-24.1 (4.24)	0.042 (0.24)	R-26.0 (4.59)	0.038 (0.22)	R-27.2 (4.79)	0.037 (0.21)
	R-16.8 (2.96)	R-16.8 (2.96)	R-36.8 (6.48)	R-26.0 (4.58)	0.038 (0.22)	R-28.1 (4.96)	0.036 (0.20)	R-29.4 (5.18)	0.034 (0.19)
60”	R-16.8 (2.96)	R-12.6 (2.22)	R-32.6 (5.74)	R-25.5 (4.50)	0.039 (0.22)	R-27.5 (4.85)	0.036 (0.21)	R-28.6 (5.04)	0.035 (0.20)
	R-16.8 (2.96)	R-16.8 (2.96)	R-36.8 (6.48)	R-28.1 (4.95)	0.036 (0.20)	R-30.2 (5.33)	0.033 (0.19)	R-31.2 (5.49)	0.032 (0.18)

Detail 5.1.46

Exterior Insulated 3 5/8” x 1 5/8” Steel Stud (16” o.c.) Wall Assembly with Thermally Broken ISO Clip System (32” o.c.) Supporting Horizontal and Vertical Sub-girts – Clear Wall

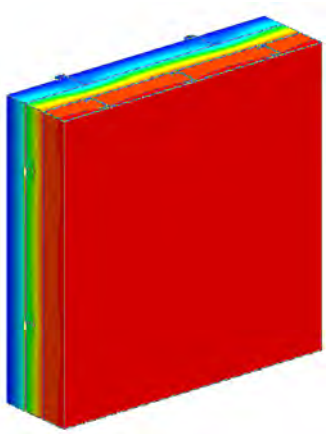

View from Interior

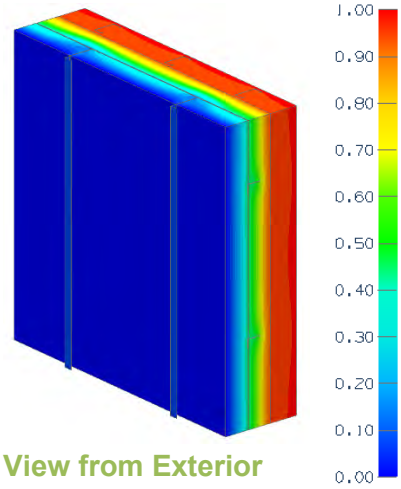

View from Exterior

Thermal Performance Indicators

Assembly 1D (Nominal) R-Value	R_{1D}	R-3.2 (0.56 RSI) + insulation
Transmittance / Resistance without Anomaly	U_o, R_o	“clear field” U- and R-value, without roof anchor
Transmittance / Resistance	U, R	U- and R-values for overall assembly
Surface Temperature Index[1]	T_i	0 = exterior temperature 1 = interior temperature

[1]Assumptions and limitations for surface temperatures identified in ASHRAE 1365-RP

Nominal (1D) vs. Assembly Performance Indicators

Vertical Girt Spacing	Base Layer Exterior Insulation 1D R-Value (RSI)	Outer Layer Exterior Insulation 1D R-Value (RSI)	R_{1D} ft²·hr·°F / Btu (m² K / W)	24” Vertical Clip Spacing		40” Vertical Clip Spacing		60” Vertical Clip Spacing	
				R_o ft²·hr·°F / Btu (m² K / W)	U_o Btu/ft² ·hr ·°F (W/m² K)	R_o ft²·hr·°F / Btu (m² K / W)	U_o Btu/ft² ·hr ·°F (W/m² K)	R_o ft²·hr·°F / Btu (m² K / W)	U_o Btu/ft² ·hr ·°F (W/m² K)
24”	R-16.8 (2.96)	R-12.6 (2.22)	R-32.6 (5.74)	R-23.9 (4.21)	0.042 (0.24)	R-25.6 (4.50)	0.039 (0.22)	R-26.4 (4.65)	0.038 (0.22)
	R-16.8 (2.96)	R-16.8 (2.96)	R-36.8 (6.48)	R-25.2 (4.44)	0.040 (0.23)	R-27.0 (4.76)	0.037 (0.21)	R-27.9 (4.92)	0.036 (0.20)
40”	R-16.8 (2.96)	R-12.6 (2.22)	R-32.6 (5.74)	R-25.9 (4.56)	0.039 (0.22)	R-27.9 (4.91)	0.036 (0.20)	R-28.2 (4.97)	0.035 (0.20)
	R-16.8 (2.96)	R-16.8 (2.96)	R-36.8 (6.48)	R-27.9 (4.91)	0.036 (0.20)	R-30.0 (5.29)	0.033 (0.19)	R-30.5 (5.37)	0.033 (0.19)
60”	R-16.8 (2.96)	R-12.6 (2.22)	R-32.6 (5.74)	R-27.2 (4.79)	0.037 (0.21)	R-28.6 (5.04)	0.035 (0.20)	R-29.4 (5.17)	0.034 (0.19)
	R-16.8 (2.96)	R-16.8 (2.96)	R-36.8 (6.48)	R-29.8 (5.25)	0.034 (0.19)	R-31.4 (5.52)	0.032 (0.18)	R-32.2 (5.67)	0.031 (0.18)

Detail 5.1.47

Exterior Insulated 3 5/8" x 1 5/8" Steel Stud (16" o.c.) Wall Assembly with Nvelope – NV1 Clip System Supporting Cladding – Clear Wall

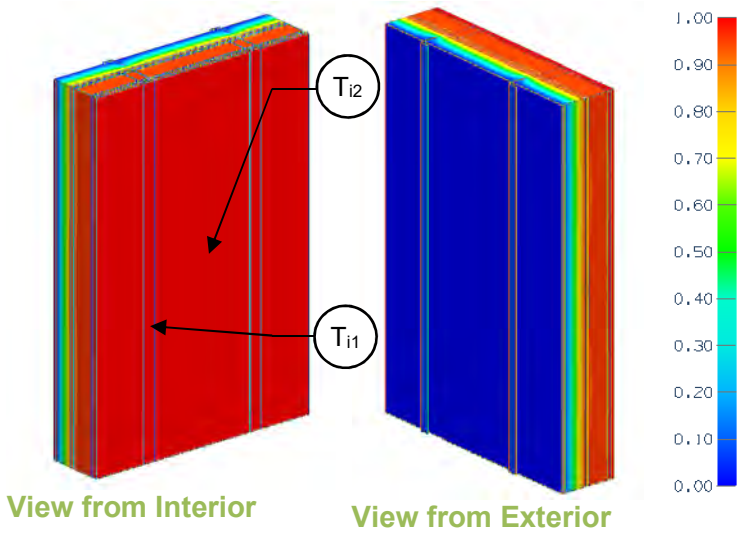

Thermal Performance Indicators

Assembly 1D (Nominal) R-Value	R_{1D}	R-3.2 (0.56 RSI) + exterior insulation
Transmittance / Resistance	U_o, R_o	"clear wall" U- and R-value
Surface Temperature Index[1]	T_i	0 = exterior temperature 1 = interior temperature

[1]Assumptions and limitations for surface temperatures identified in ASHRAE 1365-RP

Nominal (1D) vs. Assembly Performance Indicators

Exterior Insulation 1D R-Value (RSI)	R_{1D} ft²·hr·°F / Btu (m² K / W)	24" Vertical Spacing		36" Vertical Spacing		48" Vertical Spacing	
		R_o ft²·hr·°F / Btu (m² K / W)	U_o Btu/ft² ·hr ·°F (W/m² K)	R_o ft²·hr·°F / Btu (m² K / W)	U_o Btu/ft² ·hr ·°F (W/m² K)	R_o ft²·hr·°F / Btu (m² K / W)	U_o Btu/ft² ·hr ·°F (W/m² K)
R-12.6 (2.22)	R-15.8 (2.78)	R-12.6 (2.22)	0.079 (0.45)	R-13.3 (2.34)	0.075 (0.43)	R-13.7 (2.42)	0.073 (0.41)
R-16.8 (2.96)	R-20.0 (3.52)	R-14.9 (2.63)	0.067 (0.38)	R-16.1 (2.83)	0.062 (0.35)	R-16.8 (2.96)	0.059 (0.34)
R-21.0 (3.70)	R-24.2 (4.26)	R-16.7 (2.94)	0.060 (0.34)	R-18.3 (3.23)	0.055 (0.31)	R-19.2 (3.39)	0.052 (0.30)
R-25.2 (4.44)	R-28.4 (5.00)	R-18.4 (3.25)	0.050 (0.31)	R-20.6 (3.63)	0.049 (0.28)	R-21.9 (3.85)	0.046 (0.26)

Temperature Indices

	R12.6	R16.8	R21	R25.1	
T_{i1}	0.71	0.73	0.73	0.74	Min T on sheathing, at clip and stud intersection
T_{i2}	0.85	0.89	0.90	0.90	Max T on sheathing, center of stud cavity between clips

Detail 5.1.48

Exterior and Interior Insulated 3 5/8" x 1 5/8" Steel Stud (16" o.c.) Wall Assembly with Nvelope – NV1 Clip System Supporting Cladding – Clear Wall

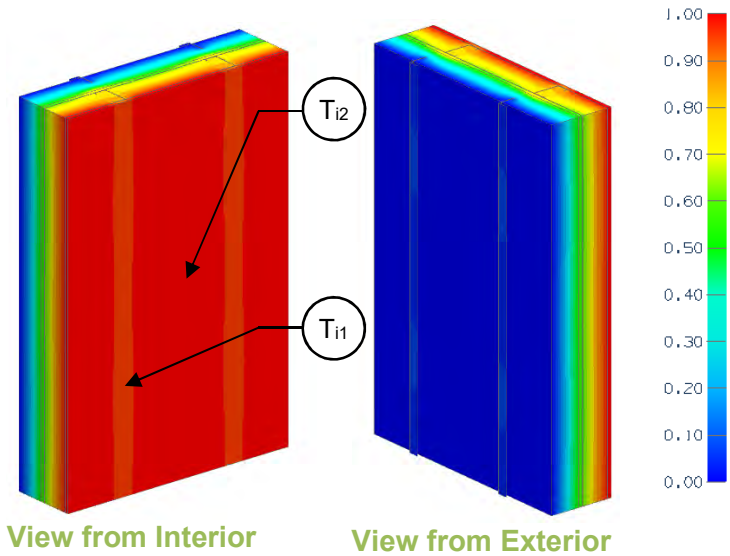

Thermal Performance Indicators

Assembly 1D (Nominal) R-Value	R_{1D}	R-14.3 (2.52 RSI) + exterior insulation
Transmittance / Resistance	U_o, R_o	"clear wall" U- and R-value
Surface Temperature Index[1]	T_i	0 = exterior temperature 1 = interior temperature

[1]Assumptions and limitations for surface temperatures identified in ASHRAE 1365-RP

Nominal (1D) vs. Assembly Performance Indicators

Exterior Insulation 1D R-Value (RSI)	R_{1D} ft²·hr·°F / Btu (m² K / W)	24" Vertical Spacing		36" Vertical Spacing		48" Vertical Spacing	
		R_o ft²·hr·°F / Btu (m² K / W)	U_o Btu/ft² ·hr ·°F (W/m² K)	R_o ft²·hr·°F / Btu (m² K / W)	U_o Btu/ft² ·hr ·°F (W/m² K)	R_o ft²·hr·°F / Btu (m² K / W)	U_o Btu/ft² ·hr ·°F (W/m² K)
R-8.4 (1.48)	R-22.7 (4.00)	R-15.9 (2.81)	0.063 (0.36)	R-16.4 (2.90)	0.061 (0.35)	R-16.9 (2.97)	0.059 (0.34)
R-12.6 (2.22)	R-26.9 (4.74)	R-18.3 (3.22)	0.055 (0.31)	R-19.2 (3.38)	0.052 (0.30)	R-19.8 (3.48)	0.051 (0.29)
R-16.8 (2.96)	R-31.1 (5.48)	R-20.6 (3.63)	0.049 (0.28)	R-22.0 (3.87)	0.046 (0.26)	R-22.9 (4.03)	0.044 (0.25)
R-21.0 (3.70)	R-35.3 (6.22)	R-22.5 (3.96)	0.044 (0.25)	R-24.4 (4.30)	0.041 (0.23)	R-25.4 (4.48)	0.039 (0.22)
R-25.2 (4.44)	R-39.5 (6.96)	R-24.2 (4.27)	0.041 (0.23)	R-26.7 (4.70)	0.037 (0.21)	R-28.1 (4.95)	0.036 (0.20)

Temperature Indices

	R8.4	R12.6	R16.8	R21	R25.1	
T_{i1}	0.42	0.47	0.50	0.52	0.53	Min T on sheathing, at clip and stud intersection
T_{i2}	0.65	0.70	0.74	0.77	0.79	Max T on sheathing, center of stud cavity between clips

Detail 5.1.49

Exterior and Interior Insulated 6” x 1 5/8” Steel Stud (16” o.c.) Wall Assembly with Nvelope – NV1 Clip System Supporting Cladding – Clear Wall

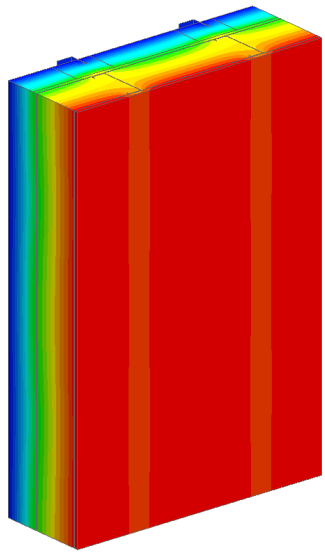

View from Interior

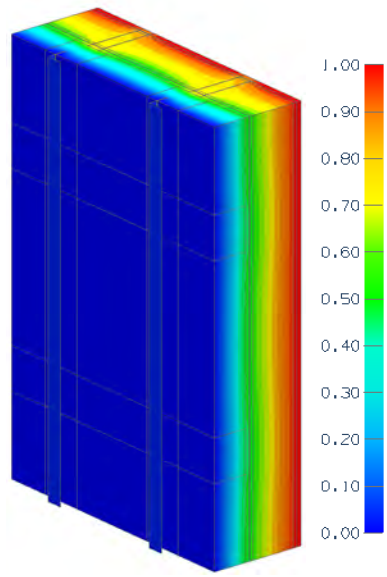

View from Exterior

Thermal Performance Indicators

Assembly 1D (Nominal) R-Value	R_{1D}	R-21.3 (3.75 RSI) + exterior insulation
Transmittance / Resistance	U_o, R_o	“clear field” U- and R-values
Surface Temperature Index[1]	T_i	0 = exterior temperature 1 = interior temperature

[1]Assumptions and limitations for surface temperatures identified in ASHRAE 1365-RP

Nominal (1D) vs. Assembly Performance Indicators

Exterior Insulation 1D R-value (RSI)	R_{1D} ft²·hr·°F / Btu (m² K / W)	24” Vertical Spacing		36” Vertical Spacing		48” Vertical Spacing	
		R_o ft²·hr·°F / Btu (m² K / W)	U_o Btu/ft² ·hr ·°F (W/m² K)	R_o ft²·hr·°F / Btu (m² K / W)	U_o Btu/ft² ·hr ·°F (W/m² K)	R_o ft²·hr·°F / Btu (m² K / W)	U_o Btu/ft² ·hr ·°F (W/m² K)
R-6.3 (1.11)	R-27.6 (4.86)	R-16.8 (2.95)	0.060 (0.34)	R-17.2 (3.03)	0.058 (0.33)	R-17.3 (3.05)	0.058 (0.33)
R-8.4 (1.48)	R-29.7 (5.23)	R-18.2 (3.2)	0.055 (0.31)	R-18.8 (3.31)	0.053 (0.30)	R-19.1 (3.36)	0.052 (0.30)
R-12.6 (2.22)	R-33.9 (5.97)	R-20.5 (3.61)	0.049 (0.28)	R-21.5 (3.78)	0.047 (0.27)	R-21.9 (3.86)	0.046 (0.26)
R-16.8 (2.96)	R-38.1 (6.71)	R-22.8 (4.01)	0.044 (0.25)	R-24.2 (4.26)	0.041 (0.24)	R-25.0 (4.40)	0.040 (0.23)

Detail 5.1.50

Exterior and Interior Insulated 6” x 1 5/8” Slotted Steel R-Stud (16” o.c.) Wall Assembly with Nvelope – NV1 Clip System Supporting Cladding – Clear Wall

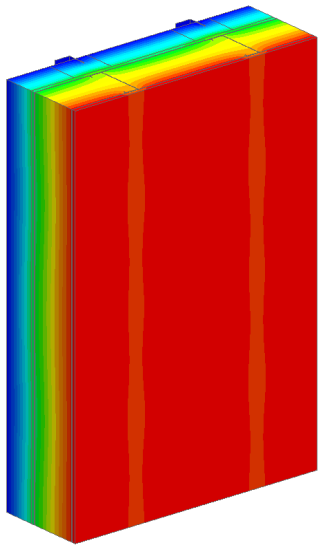

View from Interior

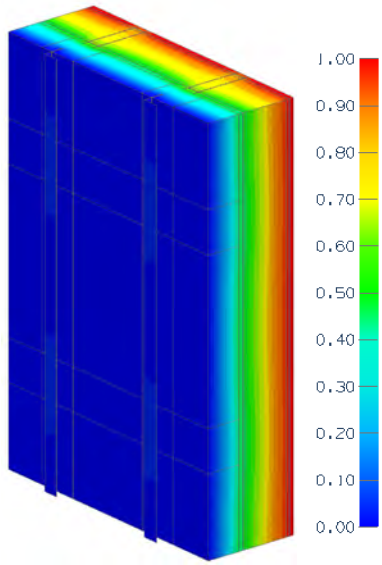

View from Exterior

Thermal Performance Indicators

Assembly 1D (Nominal) R-Value	R_{1D}	R-21.3 (3.75 RSI) + exterior insulation
Transmittance / Resistance	U_o, R_o	“clear field” U- and R-values
Surface Temperature Index[1]	T_i	0 = exterior temperature 1 = interior temperature

[1]Assumptions and limitations for surface temperatures identified in ASHRAE 1365-RP

Nominal (1D) vs. Assembly Performance Indicators

Exterior Insulation 1D R-value (RSI)	R_{1D} ft²·hr·°F / Btu (m² K / W)	24” Vertical Spacing		36” Vertical Spacing		48” Vertical Spacing	
		R_o ft²·hr·°F / Btu (m² K / W)	U_o Btu/ft² ·hr ·°F (W/m² K)	R_o ft²·hr·°F / Btu (m² K / W)	U_o Btu/ft² ·hr ·°F (W/m² K)	R_o ft²·hr·°F / Btu (m² K / W)	U_o Btu/ft² ·hr ·°F (W/m² K)
R-6.3 (1.11)	R-27.6 (4.86)	R-19.5 (3.44)	0.051 (0.29)	R-19.9 (3.51)	0.050 (0.29)	R-20.1 (3.54)	0.050 (0.28)
R-8.4 (1.48)	R-29.7 (5.23)	R-21.0 (3.69)	0.048 (0.27)	R-21.6 (3.81)	0.046 (0.26)	R-21.8 (3.85)	0.046 (0.26)
R-12.6 (2.22)	R-33.9 (5.97)	R-23.3 (4.11)	0.043 (0.24)	R-24.3 (4.29)	0.041 (0.23)	R-24.7 (4.35)	0.040 (0.23)
R-16.8 (2.96)	R-38.1 (6.71)	R-25.6 (4.52)	0.039 (0.22)	R-27.2 (4.78)	0.037 (0.21)	R-27.8 (4.90)	0.036 (0.20)

Detail 5.1.51

Exterior and Interior Insulated 3 5/8" x 1 5/8" Steel Stud (16" o.c.) Wall Assembly with Nvelope – Eko Thermobracket Clip System Supporting Cladding – Clear Wall

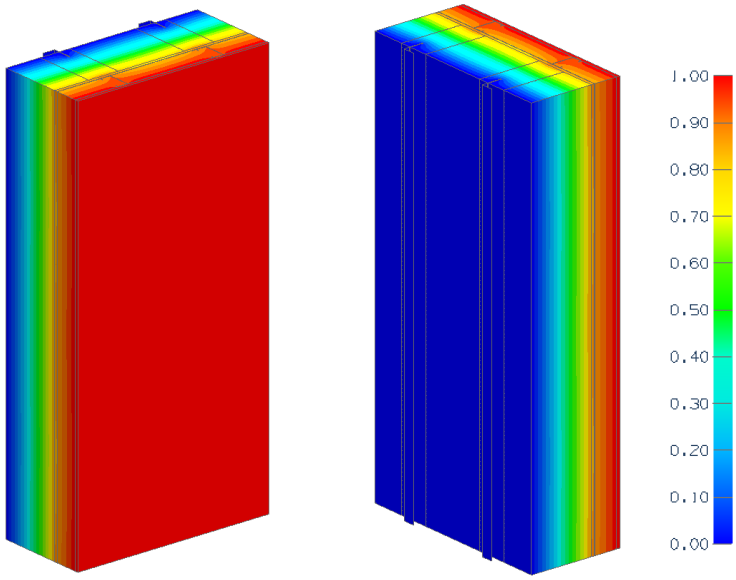

View from Interior

View from Exterior

Thermal Performance Indicators

Assembly 1D (Nominal) R-Value	R_{1D}	R-15.3 (2.69 RSI) + exterior insulation
Transmittance / Resistance	U_o, R_o	"clear field" U- and R-values
Surface Temperature Index[1]	T_i	0 = exterior temperature 1 = interior temperature

[1]Assumptions and limitations for surface temperatures identified in ASHRAE 1365-RP

Nominal (1D) vs. Assembly Performance Indicators

Exterior Insulation 1D R-value (RSI)	R_{1D} ft²·hr·°F / Btu (m² K / W)	R_o ft²·hr·°F / Btu (m² K / W)	U_o Btu/ft² ·hr ·°F (W/m² K)
R-42 (7.40)	R-57.3 (10.09)	R-47.8 (8.37)	0.021 (0.119)

Detail 5.1.52

Exterior and Interior Insulated 3 5/8” x 1 5/8” Steel Stud (16” o.c.) Wall Assembly with Nvelope – Eko Thermobracket and NV1 Clip System Supporting Cladding – Clear Wall

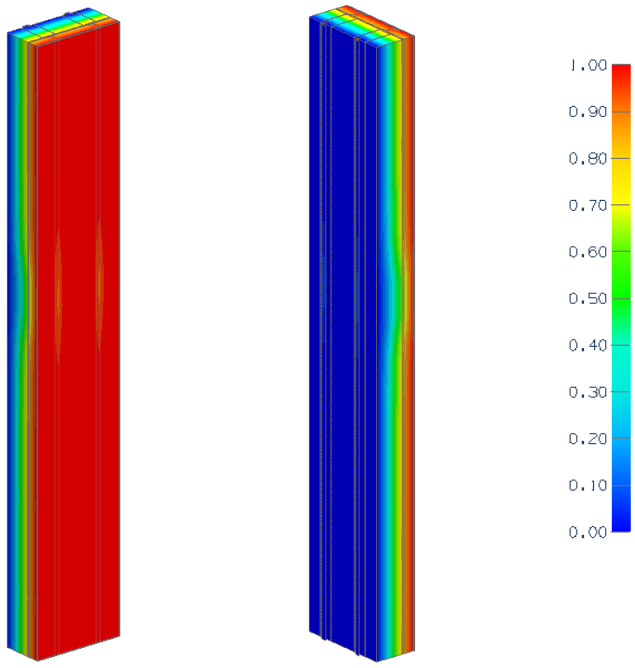

View from Interior View from Exterior

Thermal Performance Indicators

Assembly 1D (Nominal) R-Value	R_{1D}	R-15.3 (2.69 RSI) + exterior insulation
Transmittance / Resistance	U_o, R_o	“clear field” U- and R-values
Surface Temperature Index[1]	T_i	0 = exterior temperature 1 = interior temperature

[1]Assumptions and limitations for surface temperatures identified in ASHRAE 1365-RP

Nominal (1D) vs. Assembly Performance Indicators

Floor Height ft (mm)	Exterior Insulation 1D R-value (RSI)	R_{1D} ft²·hr·°F / Btu (m² K / W)	R_o ft²·hr·°F / Btu (m² K / W)	U_o Btu/ft² ·hr ·°F (W/m² K)
11’ (3353)	R-42 (7.40)	R-57.3 (10.09)	R-35.6 (6.27)	0.028 (0.16)
13.5’ (4115)	R-42 (7.40)	R-57.3 (10.09)	R-37.3 (6.57)	0.027 (0.15)
16’ (4877)	R-42 (7.40)	R-57.3 (10.09)	R-38.6 (6.80)	0.026 (0.15)

Detail 5.1.53

Exterior Insulated 3 5/8″ x 1 5/8″ Steel Stud (16″ O.C.) Wall Assembly with Cascadia Clip Fiberglass Thermal Spacers – Clear Wall

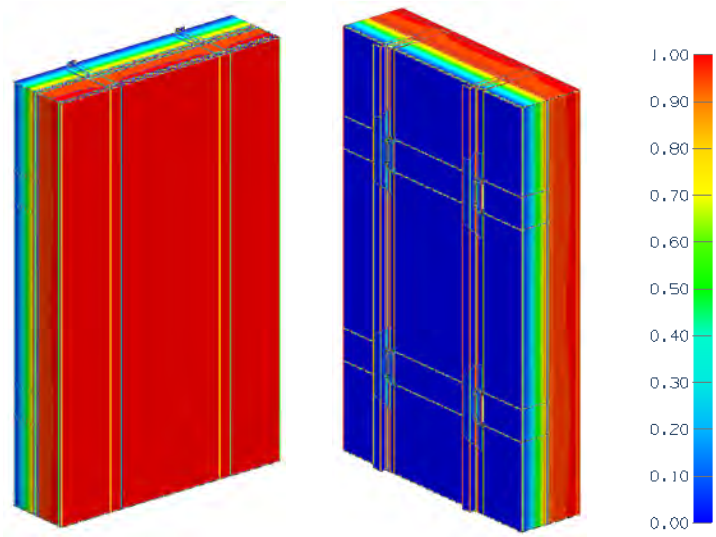

View from Interior View from Exterior

Thermal Performance Indicators

Assembly 1D (Nominal) R-Value	R_{1D}	R-3.2 (0.56 RSI) + exterior insulation
Transmittance / Resistance	U_o, R_o	"clear wall" U- and R-value

Nominal (1D) vs. Assembly Performance Indicators

Exterior Insulation 1D R-Value (RSI)	R_{1D} ft²·hr·°F / Btu (m² K / W)	26" Vertical Clip Spacing		36" Vertical Clip Spacing		48" Vertical Clip Spacing	
		R_o ft²·hr·°F / Btu (m² K / W)	U_o Btu/ft² ·hr ·°F (W/m² K)	R_o ft²·hr·°F / Btu (m² K / W)	U_o Btu/ft² ·hr ·°F (W/m² K)	R_o ft²·hr·°F / Btu (m² K / W)	U_o Btu/ft² ·hr ·°F (W/m² K)
R-8.4 (1.48)	R-11.6 (2.04)	R-11.1 (1.95)	0.090 (0.51)	R-11.4 (2.00)	0.088 (0.50)	R-11.6 (2.04)	0.086 (0.49)
R-10.5 (1.85)	R-13.7 (2.41)	R-12.9 (2.27)	0.078 (0.44)	R-13.3 (2.34)	0.075 (0.43)	R-13.5 (2.38)	0.074 (0.42)
R-12.6 (2.22)	R-15.8 (2.78)	R-14.6 (2.57)	0.069 (0.39)	R-15.0 (2.65)	0.066 (0.38)	R-15.3 (2.70)	0.065 (0.37)
R-14.7 (2.59)	R-17.9 (3.15)	R-16.4 (2.89)	0.061 (0.35)	R-16.9 (2.98)	0.059 (0.34)	R-17.3 (3.05)	0.058 (0.33)
R-16.8 (2.96)	R-20.0 (3.52)	R-18.2 (3.20)	0.055 (0.31)	R-18.8 (3.31)	0.053 (0.30)	R-19.2 (3.39)	0.052 (0.30)
R-21.0 (3.70)	R-24.2 (4.26)	R-21.5 (3.79)	0.046 (0.26)	R-22.4 (3.94)	0.045 (0.25)	R-22.9 (4.04)	0.044 (0.25)
R-25.2 (4.44)	R-28.4 (5.00)	R-24.8 (4.37)	0.040 (0.23)	R-25.9 (4.55)	0.039 (0.22)	R-26.6 (4.68)	0.038 (0.21)
R-33.6 (5.92)	R-36.8 (6.48)	R-31.4 (5.53)	0.032 (0.18)	R-32.9 (5.79)	0.030 (0.17)	R-33.9 (5.97)	0.030 (0.17)

Detail 5.1.54

Exterior and Interior Insulated 6″ x 1 5/8″ Steel Stud (16″ o.c. and 24” o.c.) Wall Assembly with Vertical Clips (24″ o.c. and 36” o.c.) Supporting Cladding and Owens Corning R-20 Batt Insulation in Stud Cavity – Clear Wall

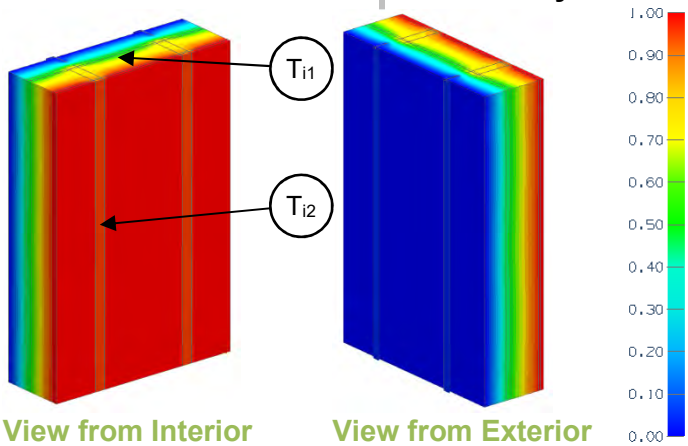

Thermal Performance Indicators

Assembly 1D (Nominal) R-Value	R_{1D}	R-22.4 (3.94) + insulation
Transmittance / Resistance without Anomaly	U_o, R_o	“clear field” U- and R-value, without connectors or joint
Surface Temperature Index[1]	T_i	0 = exterior temperature 1 = interior temperature

Nominal (1D) vs. Assembly Performance Indicators

16” o.c. Studs

Exterior Insulation 1D R-Value (RSI)	R_{1D} ft²·hr·°F / Btu (m² K / W)	24” Vertical Clip Spacing		36” Vertical Clip Spacing	
		R_o ft²·hr·°F / Btu (m² K / W)	U_o Btu/ft² ·hr ·°F (W/m² K)	R_o ft²·hr·°F / Btu (m² K / W)	U_o Btu/ft² ·hr ·°F (W/m² K)
R-4.2 (0.74)	R-26.6 (4.68)	R-15.7 (2.77)	0.064 (0.36)	R-15.9 (2.80)	0.063 (0.36)
R-8.4 (1.48)	R-30.8 (5.42)	R-18.3 (3.22)	0.055 (0.31)	R-18.7 (3.30)	0.053 (0.30)
R-12.6 (2.22)	R-35.0 (6.16)	R-20.4 (3.59)	0.049 (0.28)	R-21.0 (3.69)	0.048 (0.27)
R-16.8 (2.96)	R-39.2 (6.90)	R-22.9 (4.03)	0.044 (0.25)	R-24.0 (4.23)	0.042 (0.24)

24” o.c. Studs

Exterior Insulation 1D R-Value (RSI)	R_{1D} ft²·hr·°F / Btu (m² K / W)	24” Vertical Clip Spacing		36” Vertical Clip Spacing	
		R_o ft²·hr·°F / Btu (m² K / W)	U_o Btu/ft² ·hr ·°F (W/m² K)	R_o ft²·hr·°F / Btu (m² K / W)	U_o Btu/ft² ·hr ·°F (W/m² K)
R-4.2 (0.74)	R-26.6 (4.68)	R-18.2 (3.20)	0.055 (0.31)	R-18.3 (3.23)	0.055 (0.31)
R-8.4 (1.48)	R-30.8 (5.42)	R-21.1 (3.72)	0.047 (0.27)	R-21.5 (3.78)	0.047 (0.26)
R-12.6 (2.22)	R-35.0 (6.16)	R-23.6 (4.16)	0.042 (0.24)	R-24.3 (4.27)	0.041 (0.23)
R-16.8 (2.96)	R-39.2 (6.90)	R-26.5 (4.68)	0.038 (0.21)	R-27.6 (4.86)	0.036 (0.21)

Temperature Indices

	R4.2	R8.4	R12.6	R16.8	
T_{i1}	0.23	0.35	0.43	0.47	Min T on sheathing, between studs
T_{i2}	0.53	0.60	0.65	0.69	Max T on sheathing, at stud, between clips

Temperature indices taken from scenario with 16” o.c. studs with 24” vertical clip spacing. All other scenarios have higher minimum temperature index.

Detail 5.1.55

Exterior and Interior Insulated 6″ x 1 5/8” Steel Stud (16″ o.c. and 24” o.c.) Wall Assembly with Vertical Clips (24″ O.C. and 36” o.c.) Supporting Cladding and Owens Corning R-22.5 Batt Insulation in Stud Cavity– Clear Wall

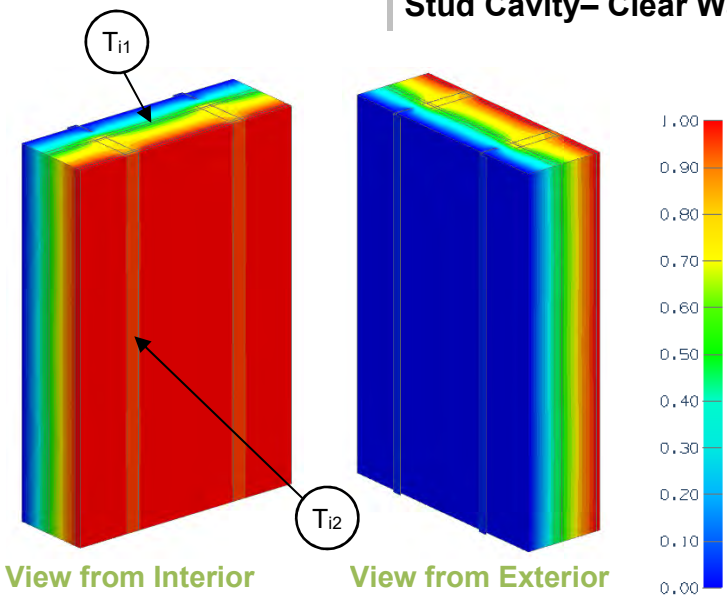

Thermal Performance Indicators

Assembly 1D (Nominal) R-Value	R_{1D}	R-24.9 (4.39 RSI) + exterior insulation
Transmittance / Resistance	U_o, R_o	“clear wall” U- and R-value
Surface Temperature Index[1]	T_i	0 = exterior temperature 1 = interior temperature

[1]Assumptions and limitations for surface temperatures identified in ASHRAE 1365-RP

Nominal (1D) vs. Assembly Performance Indicators

16” o.c. Studs

Exterior Insulation 1D R-Value (RSI)	R_{1D} ft²·hr·°F / Btu (m² K / W)	24” Vertical Clip Spacing		36” Vertical Clip Spacing	
		R_o ft²·hr·°F / Btu (m² K / W)	U_o Btu/ft² ·hr ·°F (W/m² K)	R_o ft²·hr·°F / Btu (m² K / W)	U_o Btu/ft² ·hr ·°F (W/m² K)
R-4.2 (0.74)	R-29.1 (5.13)	R-16.3 (2.86)	0.062 (0.35)	R-16.4 (2.9)	0.061 (0.35)
R-8.4 (1.48)	R-33.3 (5.86)	R-18.8 (3.32)	0.053 (0.30)	R-19.3 (3.39)	0.052 (0.29)
R-12.6 (2.22)	R-37.5 (6.60)	R-20.9 (3.68)	0.048 (0.27)	R-21.6 (3.81)	0.046 (0.26)
R-16.8 (2.96)	R-41.7 (7.34)	R-23.4 (4.12)	0.043 (0.24)	R-24.7 (4.34)	0.041 (0.23)

24” o.c. Studs

Exterior Insulation 1D R-Value (RSI)	R_{1D} ft²·hr·°F / Btu (m² K / W)	24” Vertical Clip Spacing		36” Vertical Clip Spacing	
		R_o ft²·hr·°F / Btu (m² K / W)	U_o Btu/ft² ·hr ·°F (W/m² K)	R_o ft²·hr·°F / Btu (m² K / W)	U_o Btu/ft² ·hr ·°F (W/m² K)
R-4.2 (0.74)	R-29.1 (5.13)	R-18.9 (3.34)	0.053 (0.30)	R-19.1 (3.37)	0.052 (0.30)
R-8.4 (1.48)	R-33.3 (5.86)	R-21.9 (3.85)	0.046 (0.26)	R-22.3 (3.92)	0.045 (0.25)
R-12.6 (2.22)	R-37.5 (6.60)	R-24.4 (4.29)	0.041 (0.23)	R-25 (4.41)	0.040 (0.23)
R-16.8 (2.96)	R-41.7 (7.34)	R-27.3 (4.81)	0.037 (0.21)	R-28.4 (5.0)	0.035 (0.20)

Temperature Indices

	R4.2	R8.4	R12.6	R16.8	
T_{i1}	0.20	0.32	0.40	0.45	Min T on sheathing, between studs
T_{i2}	0.53	0.60	0.65	0.70	Max T on sheathing, at stud, between clips

Temperature indices taken from scenario with 24” o.c. studs with 36” vertical clip spacing. All other scenarios have higher minimum temperature index.

Detail 5.1.56

Exterior and Interior Insulated 6″ x 1 5/8”Steel Stud (16″ o.c. and 24” o.c.) Wall Assembly with Vertical Clips (24″ O.C. and 36” o.c.) Supporting Cladding and Owens Corning R-24 Batt Insulation in Stud Cavity– Clear Wall

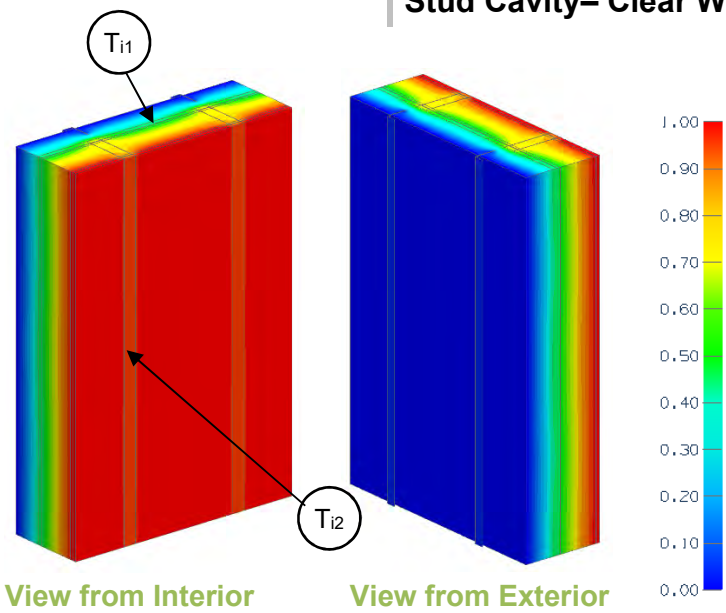

Thermal Performance Indicators

Assembly 1D (Nominal) R-Value	R_{1D}	R-26.4 (4.65 RSI) + exterior insulation
Transmittance / Resistance	U_o, R_o	“clear wall” U- and R-value
Surface Temperature Index[1]	T_i	0 = exterior temperature 1 = interior temperature

[1]Assumptions and limitations for surface temperatures identified in ASHRAE 1365-RP

Nominal (1D) vs. Assembly Performance Indicators

16” o.c. Studs

Exterior Insulation 1D R-Value (RSI)	R_{1D} ft²·hr·°F / Btu (m² K / W)	24” Vertical Clip Spacing		36” Vertical Clip Spacing	
		R_o ft²·hr·°F / Btu (m² K / W)	U_o Btu/ft² ·hr ·°F (W/m² K)	R_o ft²·hr·°F / Btu (m² K / W)	U_o Btu/ft² ·hr ·°F (W/m² K)
R-4.2 (0.74)	R-30.6 (5.39)	R-16.8 (2.95)	0.060 (0.34)	R-16.9 (2.98)	0.059 (0.34)
R-8.4 (1.48)	R-34.8 (6.13)	R-19.3 (3.40)	0.052 (0.29)	R-19.8 (3.48)	0.051 (0.29)
R-12.6 (2.22)	R-39.0 (6.87)	R-21.3 (3.76)	0.047 (0.27)	R-22.1 (3.89)	0.045 (0.26)
R-16.8 (2.96)	R-43.2 (7.61)	R-23.9 (4.21)	0.042 (0.24)	R-25.1 (4.43)	0.040 (0.23)

24” o.c. Studs

Exterior Insulation 1D R-Value (RSI)	R_{1D} ft²·hr·°F / Btu (m² K / W)	24” Vertical Clip Spacing		36” Vertical Clip Spacing	
		R_o ft²·hr·°F / Btu (m² K / W)	U_o Btu/ft² ·hr ·°F (W/m² K)	R_o ft²·hr·°F / Btu (m² K / W)	U_o Btu/ft² ·hr ·°F (W/m² K)
R-4.2 (0.74)	R-30.6 (5.39)	R-19.7 (3.47)	0.051 (0.29)	R-19.8 (3.50)	0.050 (0.29)
R-8.4 (1.48)	R-34.8 (6.13)	R-22.6 (3.98)	0.044 (0.25)	R-23.0 (4.05)	0.043 (0.25)
R-12.6 (2.22)	R-39.0 (6.87)	R-25.1 (4.42)	0.040 (0.23)	R-25.7 (4.53)	0.039 (0.22)
R-16.8 (2.96)	R-43.2 (7.61)	R-28.0 (4.93)	0.036 (0.20)	R-29.1 (5.12)	0.034 (0.20)

Temperature Indices

	R4.2	R8.4	R12.6	R16.8	
T_{i1}	0.19	0.30	0.38	0.44	Min T on sheathing, between studs
T_{i2}	0.53	0.56	0.64	0.69	Max T on sheathing, at stud, between clips

Temperature indices taken from scenario with 24” o.c. studs with 36” vertical clip spacing. All other scenarios have higher minimum temperature index.

Detail 5.1.57

Owens Corning Exterior Insulated 6″ x 1 5/8″ Steel Stud (16″ o.c. and 24” o.c.) Wall Assembly with Vertical Clips (24″ o.c. and 36” o.c.) Supporting Cladding – Clear Wall

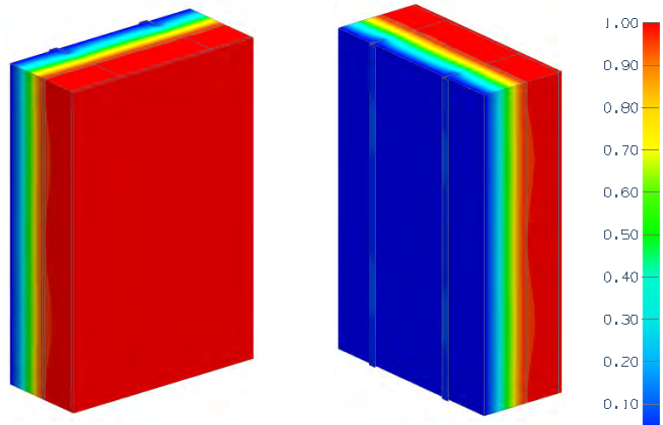

View from Interior View from Exterior

Thermal Performance Indicators

Assembly 1D (Nominal) R-Value	R_{1D}	R-3.3 (0.58) + insulation
Transmittance / Resistance without Anomaly	U_o, R_o	“clear field” U- and R-value, without connectors or joint

Nominal (1D) vs. Assembly Performance Indicators

16” o.c. Studs

Exterior Insulation 1D R-Value (RSI)	R_{1D} ft²·hr·ºF / Btu (m² K / W)	24” Vertical Clip Spacing		36” Vertical Clip Spacing	
		R_o ft²·hr·ºF / Btu (m² K / W)	U_o Btu/ft² ·hr ·ºF (W/m² K)	R_o ft²·hr·ºF / Btu (m² K / W)	U_o Btu/ft² ·hr ·ºF (W/m² K)
R-4.2 (0.74)	R-7.5 (1.32)	R-7.0 (1.24)	0.142 (0.81)	R-7.1 (1.26)	0.140 (0.80)
R-8.4 (1.48)	R-11.7 (2.06)	R-9.9 (1.75)	0.101 (0.57)	R-10.2 (1.80)	0.098 (0.56)
R-12.6 (2.22)	R-15.9 (2.80)	R-12.2 (2.15)	0.082 (0.47)	R-12.6 (2.23)	0.079 (0.45)
R-16.8 (2.96)	R-20.1 (3.54)	R-14.7 (2.59)	0.068 (0.39)	R-15.6 (2.75)	0.064 (0.36)
R-21.0 (3.70)	R-24.3 (4.28)	R-17.0 (3.00)	0.059 (0.33)	R-18.8 (3.30)	0.053 (0.31)
R-25.2 (4.44)	R-28.5 (5.02)	R-19.1 (3.37)	0.052 (0.30)	R-21.4 (3.77)	0.047 (0.26)
R-29.4 (5.18)	R-32.7 (5.76)	R-21.0 (3.71)	0.048 (0.27)	R-23.9 (4.22)	0.042 (0.24)

24” o.c. Studs

Exterior Insulation 1D R-Value (RSI)	R_{1D} ft²·hr·ºF / Btu (m² K / W)	24” Vertical Clip Spacing		36” Vertical Clip Spacing	
		R_o ft²·hr·ºF / Btu (m² K / W)	U_o Btu/ft² ·hr ·ºF (W/m² K)	R_o ft²·hr·ºF / Btu (m² K / W)	U_o Btu/ft² ·hr ·ºF (W/m² K)
R-4.2 (0.74)	R-7.5 (1.32)	R-7.2 (1.27)	0.139 (0.79)	R-7.3 (1.28)	0.137 (0.78)
R-8.4 (1.48)	R-11.7 (2.06)	R-10.5 (1.84)	0.096 (0.54)	R-10.7 (1.88)	0.094 (0.53)
R-12.6 (2.22)	R-15.9 (2.80)	R-13.2 (2.33)	0.076 (0.43)	R-13.6 (2.40)	0.073 (0.42)
R-16.8 (2.96)	R-20.1 (3.54)	R-16.1 (2.84)	0.062 (0.35)	R-16.9 (2.98)	0.059 (0.34)
R-21.0 (3.70)	R-24.3 (4.28)	R-18.9 (3.33)	0.053 (0.30)	R-20.3 (3.57)	0.050 (0.28)
R-25.2 (4.44)	R-28.5 (5.02)	R-21.5 (3.78)	0.047 (0.26)	R-23.4 (4.11)	0.043 (0.24)
R-29.4 (5.18)	R-32.7 (5.76)	R-23.9 (4.20)	0.042 (0.24)	R-26.3 (4.63)	0.038 (0.22)

Detail 5.1.58

Owens Corning Exterior Insulated 6″ x 1 5/8″ Steel Stud (16″ o.c.) Wall Assembly with Thermally Isolated Vertical Brackets and Rail System (24″ o.c.) Supporting Metal Cladding – Clear Wall

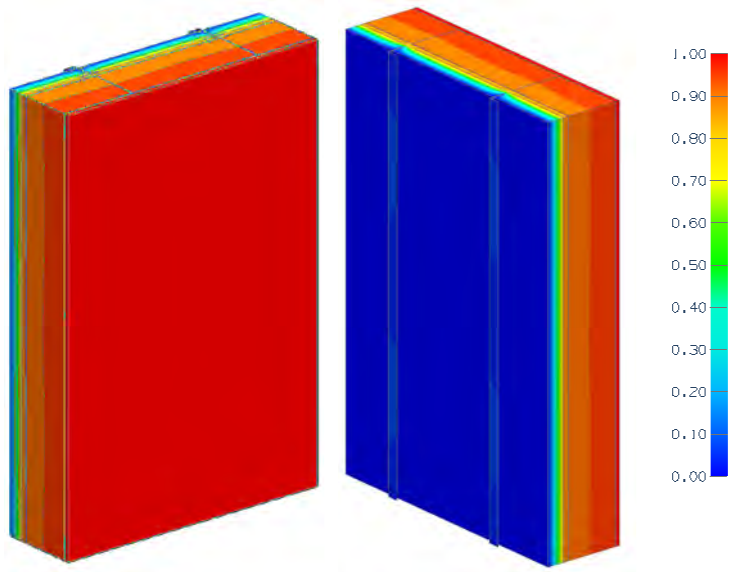

View from Interior View from Exterior

Thermal Performance Indicators

Assembly 1D (Nominal) R-Value	R_{1D}	R-3.3 (0.58 RSI) + exterior insulation
Transmittance / Resistance without Anomaly	U_o, R_o	“clear wall” U- and R-value

[1]Assumptions and limitations for surface temperatures identified in ASHRAE 1365-RP

Nominal (1D) vs. Assembly Performance Indicators

Exterior Insulation 1D R-Value (RSI)	R_{1D} ft²·hr·°F / Btu (m² K / W)	R_o ft²·hr·°F / Btu (m² K / W)	U_o Btu/ft² ·hr ·°F (W/m² K)
R-8.4 (1.48)	R-11.7 (2.06)	R-10.0 (1.77)	0.100 (0.57)
R-21.0 (3.70)	R-24.3 (4.28)	R-17.6 (3.10)	0.057 (0.32)

Detail 5.1.59

Exterior and Interior Insulated 6″ x 1 5/8″ Steel Stud (16″ o.c. and 24” o.c.) Wall Assembly with Vertical Clips (24″ o.c. and 36” o.c.) Supporting Cladding and R-20 Batt Insulation in Stud Cavity – Clear Wall

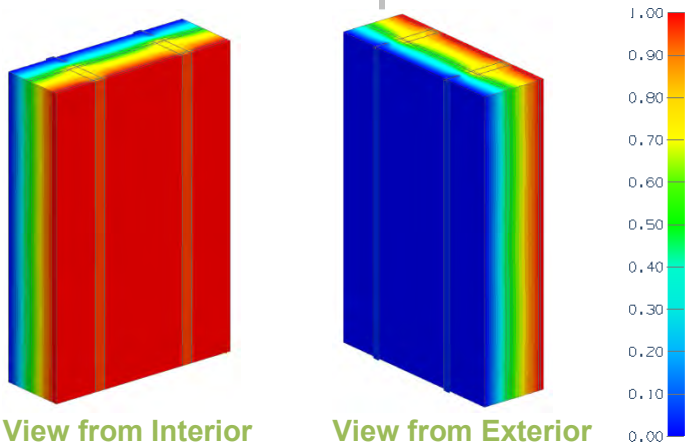

View from Interior View from Exterior

Thermal Performance Indicators

Assembly 1D (Nominal) R-Value	R_{1D}	R-22.4 (3.94) + insulation
Transmittance / Resistance without Anomaly	U_o, R_o	“clear field” U- and R-value, without connectors or joint

Nominal (1D) vs. Assembly Performance Indicators

16” o.c. Studs

Exterior Insulation 1D R-Value (RSI)	R_{1D} ft²·hr·°F / Btu (m² K / W)	24” Vertical Clip Spacing		36” Vertical Clip Spacing	
		R_o ft²·hr·`°F / Btu (m² K / W)	U_o Btu/ft² ·hr ·°F (W/m² K)	R_o ft²·hr·°F / Btu (m² K / W)	U_o Btu/ft² ·hr ·°F (W/m² K)
R-16.8 (2.96)	R-39.2 (6.90)	R-22.9 (4.03)	0.044 (0.25)	R-24.0 (4.23)	0.042 (0.24)
R-21.0 (3.70)	R-43.4 (7.64)	R-25.2 (4.44)	0.040 (0.23)	R-27.3 (4.80)	0.037 (0.21)
R-25.2 (4.44)	R-47.6 (8.38)	R-27.3 (4.81)	0.037 (0.21)	R-30.0 (5.28)	0.033 (0.19)
R-29.4 (5.18)	R-51.8 (9.12)	R-29.2 (5.15)	0.034 (0.19)	R-32.5 (5.72)	0.031 (0.17)

24” o.c. Studs

Exterior Insulation 1D R-Value (RSI)	R_{1D} ft²·hr·°F / Btu (m² K / W)	24” Vertical Clip Spacing		36” Vertical Clip Spacing	
		R_o ft²·hr·°F / Btu (m² K / W)	U_o Btu/ft² ·hr ·°F (W/m² K)	R_o ft²·hr·°F / Btu (m² K / W)	U_o Btu/ft² ·hr ·°F (W/m² K)
R-16.8 (2.96)	R-39.2 (6.90)	R-26.5 (4.67)	0.038 (0.21)	R-27.6 (4.86)	0.036 (0.21)
R-21.0 (3.70)	R-43.4 (7.64)	R-29.3 (5.16)	0.034 (0.20)	R-31.0 (5.47)	0.032 (0.19)
R-25.2 (4.44)	R-47.6 (8.38)	R-31.8 (5.60)	0.031 (0.18)	R-34.1 (6.01)	0.029 (0.17)
R-29.4 (5.18)	R-51.8 (9.12)	R-34.2 (6.02)	0.029 (0.17)	R-37.0 (6.52)	0.027 (0.15)

Detail 5.1.60

Exterior and Interior Insulated 6″ x 1 5/8″ Steel Stud (16″ o.c. and 24″ o.c.) Wall Assembly with Steel Brick Anchors Supporting Brick Veneer and Owens Corning R-20 Batt Insulation in Stud Cavity – Clear Wall

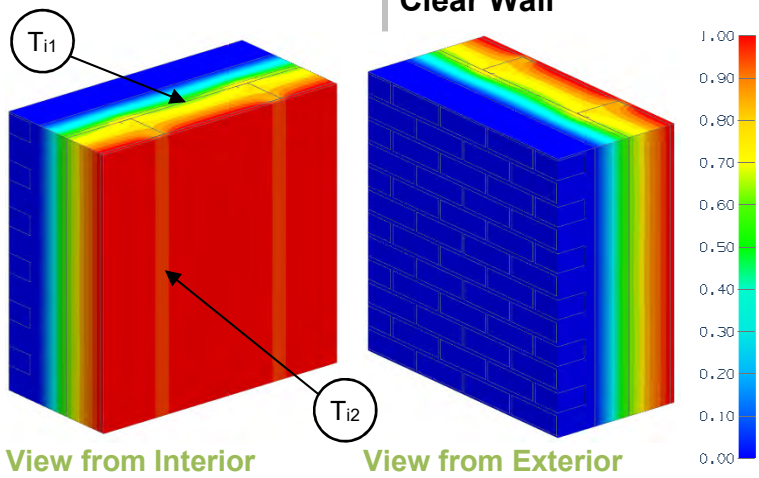

Thermal Performance Indicators

Assembly 1D (Nominal) R-Value	R_{1D}	R-23.4 (4.12 RSI) + exterior insulation
Transmittance / Resistance	U_o, R_o	"clear wall" U- and R-value
Surface Temperature Index[1]	T_i	0 = exterior temperature 1 = interior temperature

Nominal (1D) vs. Assembly Performance Indicators

Exterior Insulation 1D R-Value (RSI)	R_{1D} ft²·hr·°F / Btu (m² K / W)	16" o.c.		24" o.c.	
		R_o ft²·hr·°F / Btu (m² K / W)	U_o Btu/ft² ·hr ·°F (W/m² K)	R_o ft²·hr·°F / Btu (m² K / W)	U_o Btu/ft² ·hr ·°F (W/m² K)
R-5.0 (0.88)	R-28.4 (5.01)	R-16.5 (2.91)	0.061 (0.34)	R-19.2 (3.38)	0.052 (0.30)
R-7.5 (1.32)	R-30.9 (5.45)	R-18.4 (3.23)	0.054 (0.31)	R-21.2 (3.74)	0.047 (0.27)
R-10.0 (1.76)	R-33.4 (5.89)	R-20.1 (3.54)	0.050 (0.28)	R-23.2 (4.09)	0.043 (0.25)
R-15.0 (2.64)	R-38.4 (6.77)	R-23.3 (4.10)	0.043 (0.24)	R-27.0 (4.75)	0.037 (0.21)

Temperature Indices

	R5	R7.5	R10	R15	
T_{i1}	0.29	0.36	0.42	0.51	Min T on sheathing, between studs
T_{i2}	0.56	0.61	0.64	0.69	Max T on sheathing, along studs

Temperature indices taken from scenario with 16" o.c. studs. All other scenarios have higher minimum temperature index.

Detail 5.1.61

Exterior and Interior Insulation 6" x 1 5/8" Steel Stud (16" o.c. and 24" o.c.) Wall Assembly with Brick Ties Supporting Brick Veneer and Owens Corning R-22.5 Batt Insulation in Stud Cavity – Clear Wall

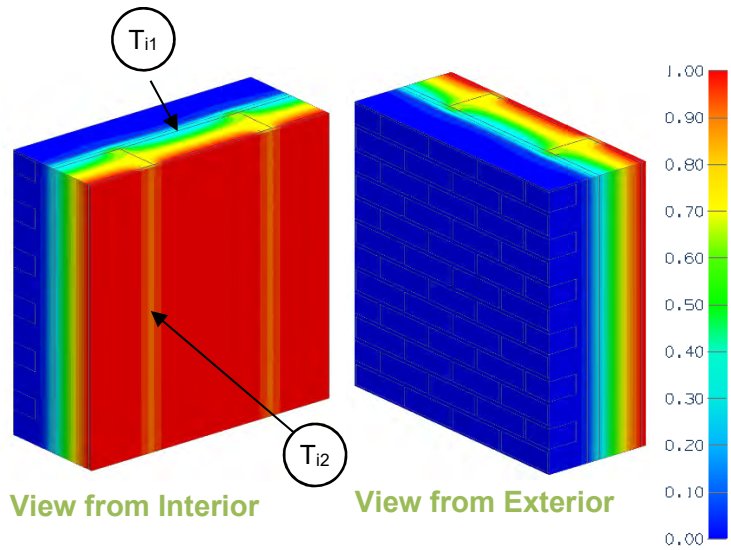

Thermal Performance Indicators

Assembly 1D (Nominal) R-Value	R_{1D}	R-24.4 (4.30 RSI) + exterior insulation
Transmittance / Resistance	U_o, R_o	"clear wall" U- and R-value
Surface Temperature Index[1]	T_i	0 = exterior temperature 1 = interior temperature

[1]Assumptions and limitations for surface temperatures identified in ASHRAE 1365-RP

Nominal (1D) vs. Assembly Performance Indicators

Carbon Steel Anchor, Bolts, and Brick Ties

Exterior Insulation 1D R-Value (RSI)	R_{1D} ft²·hr·°F / Btu (m² K / W)	16" o.c.		24" o.c.	
		R_o ft²·hr·°F / Btu (m² K / W)	U_o Btu/ft² ·hr ·°F (W/m² K)	R_o ft²·hr·°F / Btu (m² K / W)	U_o Btu/ft² ·hr ·°F (W/m² K)
R-5 (0.88)	R-29.4 (5.18)	R-17.5 (3.09)	0.057 (0.32)	R-20.3 (3.58)	0.049 (0.28)
R-7.5 (1.32)	R-31.9 (5.62)	R-19.9 (3.51)	0.050 (0.28)	R-22.8 (4.02)	0.044 (0.25)
R-10 (1.76)	R-34.4 (6.06)	R-22.3 (3.93)	0.045 (0.25)	R-25.2 (4.44)	0.040 (0.23)
R-15 (2.64)	R-39.4 (6.94)	R-26.8 (4.72)	0.037 (0.21)	R-30.0 (5.29)	0.033 (0.19)

Stainless Steel Anchor, Bolts, and Brick Ties

Exterior Insulation 1D R-Value (RSI)	R_{1D} ft²·hr·°F / Btu (m² K / W)	16" o.c.		24" o.c.	
		R_o ft²·hr·°F / Btu (m² K / W)	U_o Btu/ft² ·hr ·°F (W/m² K)	R_o ft²·hr·°F / Btu (m² K / W)	U_o Btu/ft² ·hr ·°F (W/m² K)
R-5 (0.88)	R-29.4 (5.18)	R-17.6 (3.1)	0.057 (0.32)	R-20.3 (3.58)	0.049 (0.28)
R-7.5 (1.32)	R-31.9 (5.62)	R-20.0 (3.52)	0.050 (0.28)	R-22.8 (4.02)	0.044 (0.25)
R-10 (1.76)	R-34.4 (6.06)	R-22.4 (3.94)	0.045 (0.25)	R-25.3 (4.46)	0.040 (0.22)
R-15 (2.64)	R-39.4 (6.94)	R-27.0 (4.75)	0.037 (0.21)	R-30.1 (5.29)	0.033 (0.19)

Temperature Indices

	R5	R7.5	R10	R15	
T_{i1}	0.26	0.33	0.39	0.48	Min T on sheathing, between studs
T_{i2}	0.57	0.64	0.67	0.72	Max T on sheathing, along studs

Temperature indices taken from scenario with 24" o.c. studs. All other scenarios have higher minimum temperature index.

Detail 5.1.62

Exterior and Interior Insulated 6" x 1 5/8" Steel Stud (16" o.c. and 24" o.c.) Wall Assembly with Brick Ties Supporting Brick Veneer and Owens Corning R-24 Batt Insulation in Stud Cavity – Clear Wall

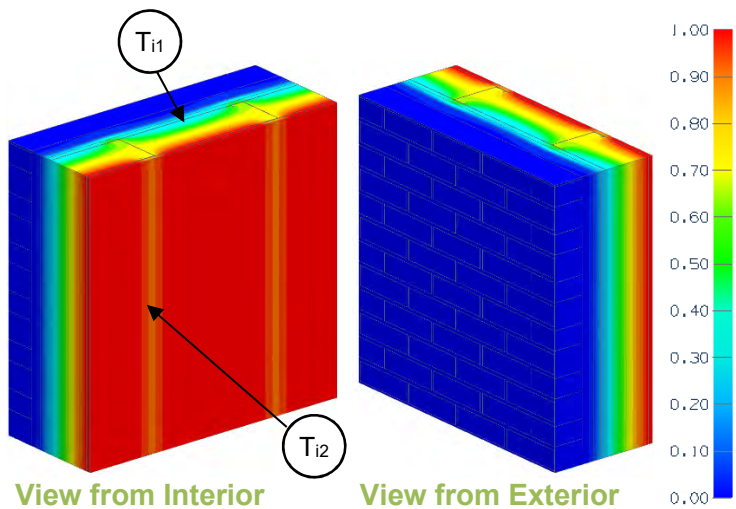

Thermal Performance Indicators

Assembly 1D (Nominal) R Value	R_{1D}	R-26.4 (4.65 RSI) + exterior insulation
Transmittance / Resistance	U_o, R_o	"clear wall" U- and R-value
Surface Temperature Index[1]	T_i	0 = exterior temperature 1 = interior temperature

[1]Assumptions and limitations for surface temperatures identified in ASHRAE 1365-RP

Nominal (1D) vs. Assembly Performance Indicators

Carbon Steel Anchor, Bolts, and Brick Ties

Exterior Insulation 1D R-Value (RSI)	R_{1D} ft²·hr·°F / Btu (m² K / W)	16" o.c.		24" o.c.	
		R_o ft²·hr·°F / Btu (m² K / W)	U_o Btu/ft² ·hr ·°F (W/m² K)	R_o ft²·hr·°F / Btu (m² K / W)	U_o Btu/ft² ·hr ·°F (W/m² K)
R-5 (0.88)	R-31.4 (5.53)	R-18.0 (3.17)	0.056 (0.32)	R-21.0 (3.70)	0.048 (0.27)
R-7.5 (1.32)	R-33.9 (5.97)	R-20.4 (3.59)	0.049 (0.28)	R-23.5 (4.15)	0.042 (0.24)
R-10 (1.76)	R-36.4 (6.41)	R-22.8 (4.01)	0.044 (0.25)	R-25.9 (4.57)	0.039 (0.22)
R-15 (2.64)	R-41.4 (7.29)	R-27.2 (4.78)	0.037 (0.21)	R-30.6 (5.40)	0.033 (0.19)

Stainless Steel Anchor, Bolts, and Brick Ties

Exterior Insulation 1D R-Value (RSI)	R_{1D} ft²·hr·°F / Btu (m² K / W)	16" o.c.		24" o.c.	
		R_o ft²·hr·°F / Btu (m² K / W)	U_o Btu/ft² ·hr ·°F (W/m² K)	R_o ft²·hr·°F / Btu (m² K / W)	U_o Btu/ft² ·hr ·°F (W/m² K)
R-5 (0.88)	R-31.4 (5.53)	R-18.0 (3.17)	0.056 (0.32)	R-21.0 (3.70)	0.048 (0.27)
R-7.5 (1.32)	R-33.9 (5.97)	R-20.4 (3.6)	0.049 (0.28)	R-23.6 (4.15)	0.042 (0.24)
R-10 (1.76)	R-36.4 (6.41)	R-22.8 (4.02)	0.044 (0.25)	R-26.1 (4.59)	0.038 (0.22)
R-15 (2.64)	R-41.4 (7.29)	R-27.2 (4.78)	0.037 (0.21)	R-30.7 (5.41)	0.033 (0.18)

Temperature Indices

	R5	R7.5	R10	R15	
T_{i1}	0.25	0.32	0.37	0.47	Min T on sheathing, between studs
T_{i2}	0.57	0.63	0.67	0.72	Max T on sheathing, along studs

Temperature indices taken from scenario with 24" o.c. studs. All other scenarios have higher minimum temperature index.

Detail 5.1.63

Exterior and Interior Insulated 6” x 1 5/8” Steel Stud (16” o.c.) Wall Assembly with Heckmann Pos-I-Tie Veneer Anchoring System Supporting Brick Veneer and Owens Corning R-20 Batt Insulation in Stud Cavity – Clear Wall

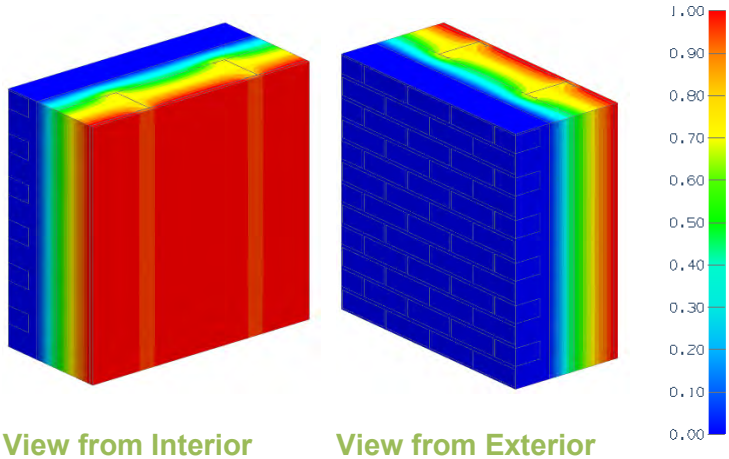

View from Interior View from Exterior

Thermal Performance Indicators

Assembly 1D (Nominal) R-Value	R_{1D}	R-23.4 (4.12 RSI) + exterior insulation
Transmittance / Resistance without Anomaly	U_o, R_o	“clear wall” U- and R-value

[1]Assumptions and limitations for surface temperatures identified in ASHRAE 1365-RP

Nominal (1D) vs. Assembly Performance Indicators

Exterior Insulation 1D R-Value (RSI)	R_{1D} ft^2·hr·°F / Btu (m^2 K / W)	R_o ft^2·hr·°F / Btu (m^2 K / W)	U_o Btu/ft^2 ·hr ·°F (W/m^2 K)
R-6.3 (1.11)	R-29.7 (5.23)	R-17.1 (3.02)	0.058 (0.33)
R-8.4 (1.48)	R-31.8 (5.60)	R-18.6 (3.28)	0.054 (0.31)
R-12.6 (2.22)	R-36.0 (6.34)	R-21.3 (3.75)	0.047 (0.27)
R-16.8 (2.96)	R-40.2 (7.08)	R-23.7 (4.17)	0.042 (0.24)
R-21.0 (3.70)	R-44.4 (7.82)	R-26.3 (4.62)	0.038 (0.22)

Detail 5.1.64

Exterior and Interior Insulated 6” x 1 5/8” Steel Stud (16” o.c.) Wall Assembly with Heckmann Pos-I-Tie Veneer Anchoring System Supporting Brick Veneer and Owens Corning R-22.5 Batt Insulation in Stud Cavity – Clear Wall

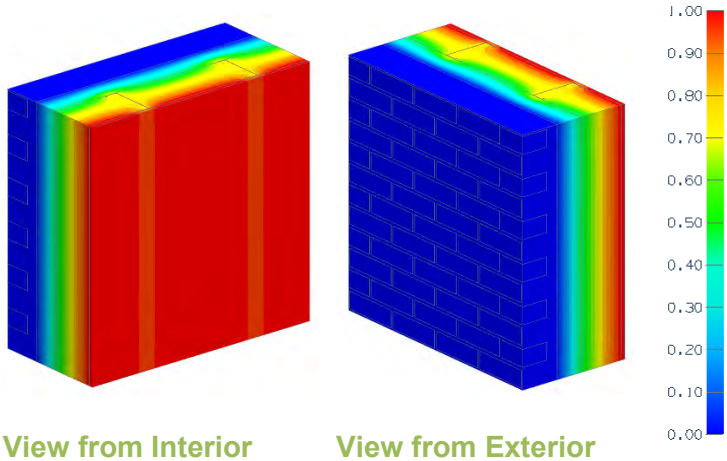

View from Interior View from Exterior

Thermal Performance Indicators

Assembly 1D (Nominal) R-Value	R_{1D}	R-25.9 (4.56 RSI) + exterior insulation
Transmittance / Resistance without Anomaly	U_o, R_o	“clear wall” U- and R-value

[1]Assumptions and limitations for surface temperatures identified in ASHRAE 1365-RP

Nominal (1D) vs. Assembly Performance Indicators

Exterior Insulation 1D R-Value (RSI)	R_{1D} ft²·hr·°F / Btu (m² K / W)	R_o ft²·hr·°F / Btu (m² K / W)	U_o Btu/ft² ·hr ·°F (W/m² K)
R-6.3 (1.11)	R-32.2 (5.67)	R-17.7 (3.12)	0.056 (0.32)
R-8.4 (1.48)	R-34.3 (6.04)	R-19.2 (3.38)	0.052 (0.30)
R-12.6 (2.22)	R-38.5 (6.78)	R-21.9 (3.85)	0.046 (0.26)
R-16.8 (2.96)	R-42.7 (7.52)	R-24.2 (4.26)	0.041 (0.24)
R-21.0 (3.70)	R-46.9 (8.26)	R-26.8 (4.71)	0.037 (0.21)

Detail 5.1.65

Exterior and Interior Insulated 6” x 1 5/8” Steel Stud (16” o.c.) Wall Assembly with Heckmann Pos-I-Tie Veneer Anchoring System Supporting Brick Veneer and Owens Corning R-24 Batt Insulation in Stud Cavity – Clear Wall

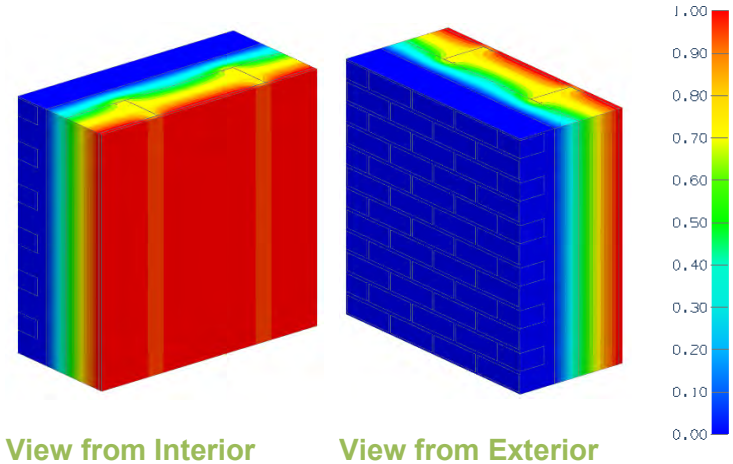

View from Interior View from Exterior

Thermal Performance Indicators

Assembly 1D (Nominal) R-Value	R_{1D}	R-27.4 (4.83 RSI) + exterior insulation
Transmittance / Resistance without Anomaly	U_o, R_o	“clear wall” U- and R-value

[1]Assumptions and limitations for surface temperatures identified in ASHRAE 1365-RP

Nominal (1D) vs. Assembly Performance Indicators

Exterior Insulation 1D R-Value (RSI)	R_{1D} ft²·hr·°F / Btu (m² K / W)	R_o ft²·hr·°F / Btu (m² K / W)	U_o Btu/ft² ·hr ·°F (W/m² K)
R-6.3 (1.11)	R-33.7 (5.94)	R-18.0 (3.17)	0.055 (0.32)
R-8.4 (1.48)	R-35.8 (6.31)	R-19.5 (3.43)	0.051 (0.29)
R-12.6 (2.22)	R-40.0 (7.04)	R-22.3 (3.93)	0.045 (0.25)
R-16.8 (2.96)	R-44.2 (7.78)	R-24.5 (4.31)	0.041 (0.23)
R-21.0 (3.70)	R-48.4 (8.52)	R-27.0 (4.76)	0.037 (0.21)

Detail 5.1.66

Exterior and Interior Insulated 6" x 1 5/8" Steel Stud (16" o.c.) Wall Assembly with Steel Anchor Supporting Brick Veneer, Owens Corning XPS Exterior Insulation and R-20 Batt Insulation in Stud Cavity – Clear Wall

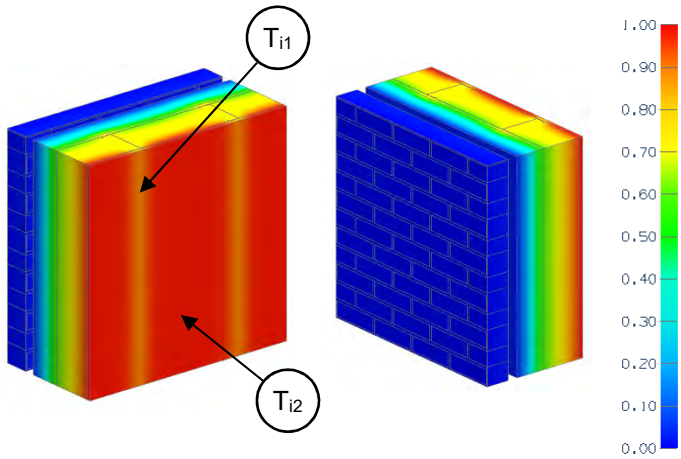

View from Interior View from Exterior

Thermal Performance Indicators

Assembly 1D (Nominal) R-Value	R_{1D}	R-23.0 (4.06 RSI) + exterior insulation
Transmittance / Resistance	U_o, R_o	"clear wall" U- and R-value
Surface Temperature Index	T_i	0 = exterior temperature 1 = interior temperature

Nominal (1D) vs. Assembly Performance Indicators

Exterior Insulation 1D R-Value (RSI)	R_{1D} ft²·hr·°F / Btu (m² K / W)	R_o ft²·hr·°F / Btu (m² K / W)	U_o Btu/ft² ·hr ·°F (W/m² K)
R-5.0 (0.88)	R-28.0 (4.94)	R-15.7 (2.77)	0.064 (0.361)
R-10.0 (1.76)	R-33.0 (5.82)	R-18.4 (3.24)	0.054 (0.309)
R-15.0 (2.64)	R-38.0 (6.70)	R-21.1 (3.71)	0.047 (0.270)
R-20.0 (3.52)	R-43.0 (7.58)	R-22.9 (4.04)	0.044 (0.247)
R-25.0 (4.40)	R-48.0 (8.46)	R-24.9 (4.39)	0.040 (0.228)

Temperature Indices

	R5	R15	R20	R25	
T_{i1}	0.30	0.44	0.44	0.47	Min T on sheathing, at anchor
T_{i2}	0.28	0.49	0.54	0.59	Min T on sheathing, between studs and anchors

Temperature indices listed for selected scenarios. All other scenarios to be interpolated.

Detail 5.1.67

Exterior Insulated 3 5/8" x 1 5/8" Steel Stud (16" o.c.) Wall Assembly with Hohmann & Barnard Masonry Zinc 2-Seal Anchor Supporting Brick Veneer – Clear Wall

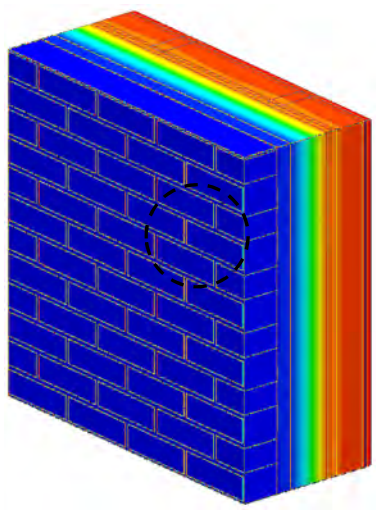

View of Exterior

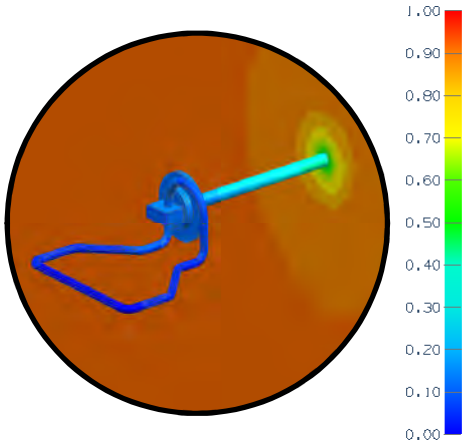

View of Anchoring Tie

Thermal Performance Indicators

Assembly 1D (Nominal) R-Value	R_{1D}	R-4.3 (0.76 RSI) + exterior insulation
Transmittance / Resistance	U_o, R_o	"Clear wall" U- and R-value: a = without batt insulation
Surface Temperature Index[1]	T_i	0 = exterior temperature 1 = interior temperature

[1]Assumptions and limitations for surface temperatures identified in ASHRAE 1365-RP

Nominal (1D) vs. Assembly Performance Indicators

Exterior Insulation 1D R-Value (RSI)	R_{1D} ft²·hr·°F / Btu (m² K / W)	8" Vertical Clip Spacing		16" Vertical Clip Spacing		24" Vertical Clip Spacing	
		R_o ft²·hr·°F / Btu (m² K / W)	U_o Btu/ft² ·hr ·°F (W/m² K)	R_o ft²·hr·°F / Btu (m² K / W)	U_o Btu/ft² ·hr ·°F (W/m² K)	R_o ft²·hr·°F / Btu (m² K / W)	U_o Btu/ft² ·hr ·°F (W/m² K)
R-4.2 (0.74)	R-8.5 (1.50)	R-7.3 (1.29)	0.137 (0.777)	R-7.7 (1.35)	0.130 (0.740)	R-7.8 (1.38)	0.128 (0.725)
R-8.4 (1.48)	R-12.7 (2.24)	R-10.1 (1.78)	0.099 (0.563)	R-11.1 (1.95)	0.090 (0.514)	R-11.5 (2.02)	0.087 (0.495)
R-12.6 (2.22)	R-16.9 (2.96)	R-12.5 (2.20)	0.080 (0.454)	R-14.2 (2.50)	0.071 (0.401)	R-14.9 (2.62)	0.067 (0.381)
R-16.8 (2.96)	R-21.1 (3.72)	R-14.7 (2.59)	0.068 (0.386)	R-17.1 (3.01)	0.058 (0.332)	R-18.2 (3.20)	0.055 (0.313)

Temperature Indices

	R4.2	R8.4	R12.6	R16.8	
T_{i1}	0.42	0.47	0.51	0.55	Min T on sheathing behind stud at Tie Penetration
T_{i2}	0.72	0.79	0.83	0.86	Max T on sheathing at edge of Steel Stud Flange aligned with Tie Penetration

Detail 5.1.68

Exterior Insulated 3 5/8" x 1 5/8" Steel Stud (16" o.c.) Wall Assembly with Hohmann & Barnard Masonry Stainless Steel 2-Seal Thermal Anchor Supporting Brick Veneer – Clear Wall

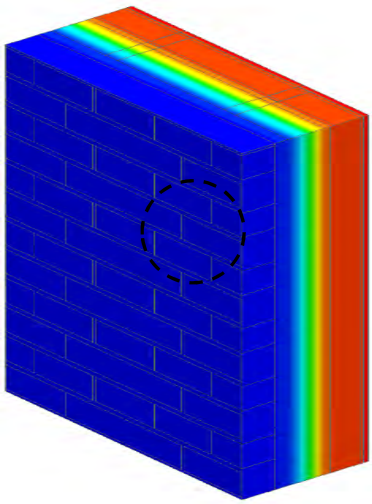

View of Exterior

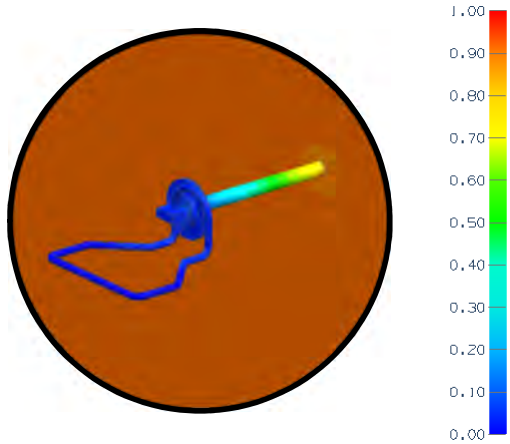

View of Anchoring Tie

Thermal Performance Indicators

Assembly 1D (Nominal) R-Value	R_{1D}	R-4.4 (0.76 RSI) + exterior insulation
Transmittance / Resistance	U_o, R_o	"Clear wall" U- and R-value
Surface Temperature Index[1]	T_i	0 = exterior temperature 1 = interior temperature

[1]Assumptions and limitations for surface temperatures identified in ASHRAE 1365-RP

Nominal (1D) vs. Assembly Performance Indicators

Exterior Insulation 1D R-Value (RSI)	R_{1D} ft²·hr·°F / Btu (m² K / W)	8" Vertical Clip Spacing		16" Vertical Clip Spacing		24" Vertical Clip Spacing	
		R_o ft²·hr·°F / Btu (m² K / W)	U_o Btu/ft² ·hr ·°F (W/m² K)	R_o ft²·hr·°F / Btu (m² K / W)	U_o Btu/ft² ·hr ·°F (W/m² K)	R_o ft²·hr·°F / Btu (m² K / W)	U_o Btu/ft² ·hr ·°F (W/m² K)
R-4.2 (0.74)	R-8.5 (1.50)	R-7.8 (1.37)	0.129 (0.731)	R-8.0 (1.4)	0.126 (0.714)	R-8.0 (1.41)	0.125 (0.708)
R-8.4 (1.48)	R-12.7 (2.24)	R-11.5 (2.02)	0.087 (0.495)	R-11.9 (2.1)	0.084 (0.477)	R-12.0 (2.12)	0.083 (0.471)
R-12.6 (2.22)	R-16.9 (2.96)	R-15.2 (2.67)	0.066 (0.375)	R-15.8 (2.78)	0.063 (0.359)	R-16.1 (2.83)	0.062 (0.354)
R-16.8 (2.96)	R-21.1 (3.72)	R-18.8 (3.31)	0.053 (0.302)	R-19.7 (3.47)	0.051 (0.288)	R-20.1 (3.53)	0.050 (0.283)

Temperature Indices

	R4.2	R8.4	R12.6	R16.8	
T_{i1}	0.67	0.75	0.81	0.80	Min T on sheathing behind stud at Tie Penetration
T_{i2}	0.74	0.82	0.86	0.89	Max T on sheathing at edge of Steel Stud Flange aligned with Tie Penetration

Detail 5.1.69

Exterior Insulated 3 5/8" x 1 5/8" Steel Stud (16" o.c.) Wall Assembly with Hohmann & Barnard Masonry Stainless Steel 2-Seal Thermal Wing Nut Anchor Supporting Brick Veneer – Clear Wall

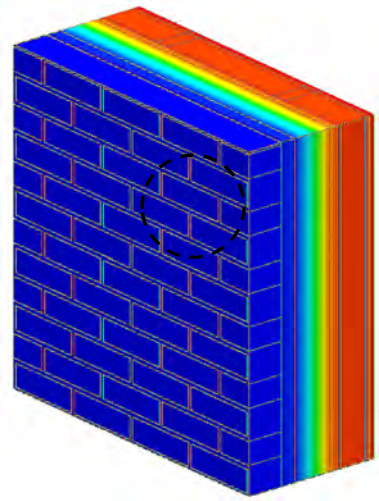

View of Exterior

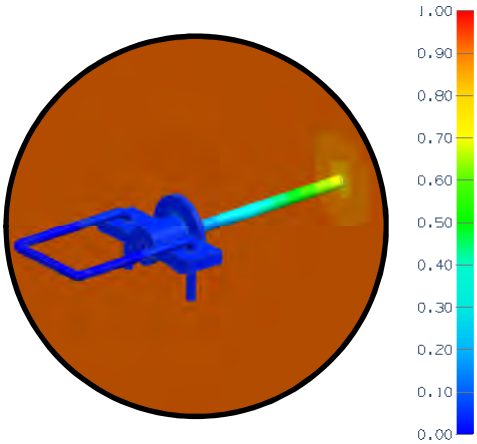

View of Anchoring Tie

Thermal Performance Indicators

Assembly 1D (Nominal) R-Value	R_{1D}	R-4.3 (0.76 RSI) + exterior insulation
Transmittance / Resistance	U_o, R_o	"Clear wall" U- and R-value
Surface Temperature Index[1]	T_i	0 = exterior temperature 1 = interior temperature

[1]Assumptions and limitations for surface temperatures identified in ASHRAE 1365-RP

Nominal (1D) vs. Assembly Performance Indicators

Exterior Insulation 1D R-Value (RSI)	R_{1D} ft²·hr·°F / Btu (m² K / W)	8" Vertical Clip Spacing		16" Vertical Clip Spacing		24" Vertical Clip Spacing	
		R_o ft²·hr·°F / Btu (m² K / W)	U_o Btu/ft² ·hr ·°F (W/m² K)	R_o ft²·hr·°F / Btu (m² K / W)	U_o Btu/ft² ·hr ·°F (W/m² K)	R_o ft²·hr·°F / Btu (m² K / W)	U_o Btu/ft² ·hr ·°F (W/m² K)
R-4.2 (0.74)	R-8.5 (1.50)	R-7.7 (1.36)	0.130 (0.737)	R-7.9 (1.39)	0.127 (0.721)	R-7.9 (1.40)	0.126 (0.716)
R-8.4 (1.48)	R-12.7 (2.24)	R-11.4 (2.01)	0.088 (0.498)	R-11.8 (2.08)	0.085 (0.481)	R-11.9 (2.10)	0.084 (0.475)
R-12.6 (2.22)	R-16.9 (2.96)	R-15.0 (2.64)	0.067 (0.379)	R-15.7 (2.76)	0.064 (0.362)	R-16.0 (2.81)	0.063 (0.356)
R-16.8 (2.96)	R-21.1 (3.72)	R-18.6 (3.27)	0.054 (0.306)	R-19.6 (3.44)	0.051 (0.290)	R-19.9 (3.51)	0.050 (0.285)

Temperature Indices

	R4.2	R8.4	R12.6	R16.8	
T_{i1}	0.56	0.66	0.72	0.76	Min T on sheathing behind stud at Tie Penetration
T_{i2}	0.75	0.83	0.87	0.90	Max T on sheathing at edge of Steel Stud Flange aligned with Tie Penetration

Detail 5.1.70

Exterior Insulated 3 5/8" x 1 5/8" Steel Stud (16" o.c.) Wall Assembly with Hohmann & Barnard Masonry Carbon Steel X-Seal Anchor Supporting Brick Veneer – Clear Wall

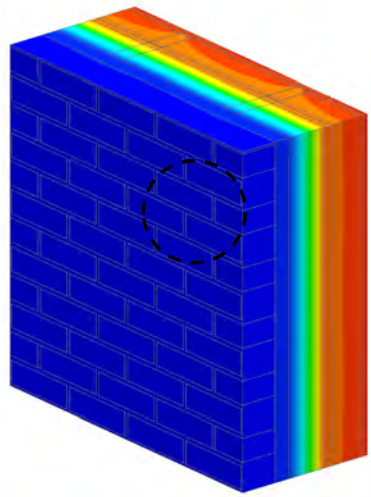

View of Exterior

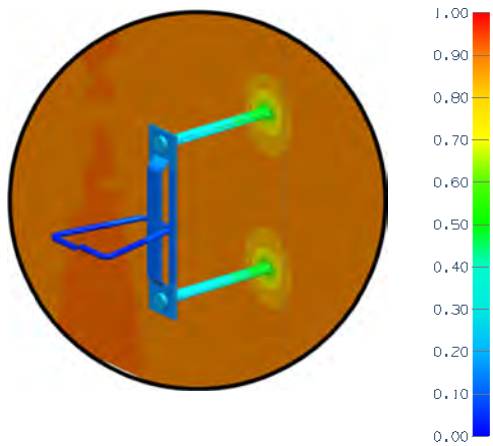

View of Anchoring Tie

Thermal Performance Indicators

Assembly 1D (Nominal) R-Value	R_{1D}	R-4.3 (0.76 RSI) + exterior insulation
Transmittance / Resistance	U_o, R_o	"Clear wall" U- and R-value
Surface Temperature Index[1]	T_i	0 = exterior temperature 1 = interior temperature

[1]Assumptions and limitations for surface temperatures identified in ASHRAE 1365-RP

Nominal (1D) vs. Assembly Performance Indicators

Exterior Insulation 1D R-Value (RSI)	R_{1D} ft²·hr·°F / Btu (m² K / W)	8" Vertical Clip Spacing		16" Vertical Clip Spacing		24" Vertical Clip Spacing	
		R_o ft²·hr·°F / Btu (m² K / W)	U_o Btu/ft² ·hr ·°F (W/m² K)	R_o ft²·hr·°F / Btu (m² K / W)	U_o Btu/ft² ·hr ·°F (W/m² K)	R_o ft²·hr·°F / Btu (m² K / W)	U_o Btu/ft² ·hr ·°F (W/m² K)
R-4.2 (0.74)	R-8.5 (1.50)	R-6.7 (1.19)	0.149 (0.844)	R-7.3 (1.29)	0.137 (0.776)	R-7.6 (1.33)	0.132 (0.750)
R-8.4 (1.48)	R-12.7 (2.24)	R-8.7 (1.54)	0.115 (0.651)	R-10.1 (1.78)	0.099 (0.563)	R-10.7 (1.89)	0.093 (0.530)
R-12.6 (2.22)	R-16.9 (2.96)	R-10.3 (1.82)	0.097 (0.551)	R-12.5 (2.20)	0.080 (0.456)	R-13.5 (2.39)	0.074 (0.419)
R-16.8 (2.96)	R-21.1 (3.72)	R-11.7 (2.06)	0.086 (0.486)	R-14.6 (2.57)	0.068 (0.389)	R-16.2 (2.85)	0.062 (0.351)

Temperature Indices

	R4.2	R8.4	R12.6	R16.8	
T_{i1}	0.47	0.53	0.57	0.60	Min T on sheathing behind stud at Tie Penetration
T_{i2}	0.69	0.76	0.80	0.82	Max T on sheathing at edge of Steel Stud Flange aligned with Tie Penetration

Detail 5.1.71

Exterior Insulated 3 5/8" x 1 5/8" Steel Stud (16" o.c.) Wall Assembly with Hohmann & Barnard Masonry Stainless Steel X-Seal Anchor Supporting Brick Veneer – Clear Wall

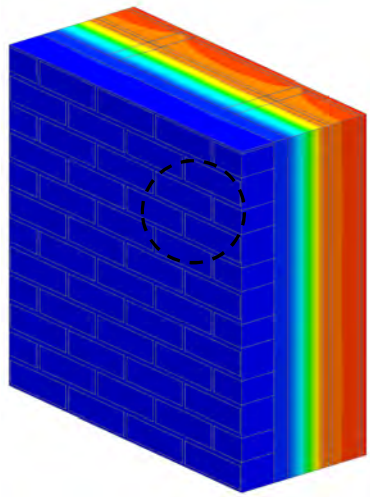

View of Exterior

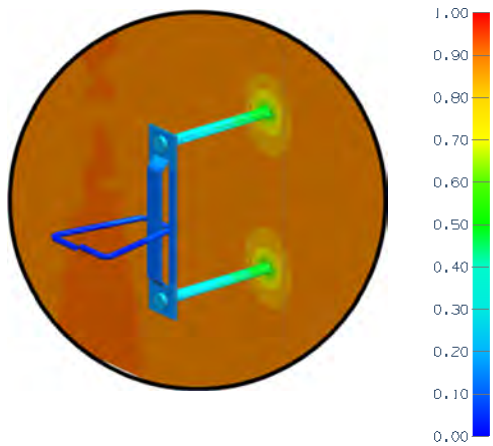

View of Anchoring Tie

Thermal Performance Indicators

Assembly 1D (Nominal) R-Value	R_{1D}	R-4.3 (0.76 RSI) + exterior insulation
Transmittance / Resistance	U_o, R_o	"Clear wall" U- and R-value
Surface Temperature Index[1]	T_i	0 = exterior temperature 1 = interior temperature

[1]Assumptions and limitations for surface temperatures identified in ASHRAE 1365-RP

Nominal (1D) vs. Assembly Performance Indicators

Exterior Insulation 1D R-Value (RSI)	R_{1D} ft²·hr·°F / Btu (m² K / W)	8" Vertical Clip Spacing		16" Vertical Clip Spacing		24" Vertical Clip Spacing	
		R_o ft²·hr·°F / Btu (m² K / W)	U_o Btu/ft² ·hr ·°F (W/m² K)	R_o ft²·hr·°F / Btu (m² K / W)	U_o Btu/ft² ·hr ·°F (W/m² K)	R_o ft²·hr·°F / Btu (m² K / W)	U_o Btu/ft² ·hr ·°F (W/m² K)
R-4.2 (0.74)	R-8.5 (1.50)	R-7.1 (1.24)	0.142 (0.804)	R-7.5 (1.33)	0.133 (0.754)	R-7.7 (1.36)	0.129 (0.735)
R-8.4 (1.48)	R-12.7 (2.24)	R-9.6 (1.69)	0.104 (0.593)	R-10.7 (1.88)	0.093 (0.531)	R-11.2 (1.97)	0.089 (0.507)
R-12.6 (2.22)	R-16.9 (2.96)	R-11.7 (2.06)	0.086 (0.486)	R-13.6 (2.4)	0.073 (0.417)	R-14.4 (2.54)	0.069 (0.394)
R-16.8 (2.96)	R-21.1 (3.72)	R-13.5 (2.39)	0.074 (0.419)	R-16.2 (2.85)	0.062 (0.351)	R-17.5 (3.09)	0.057 (0.324)

Temperature Indices

	R4.2	R8.4	R12.6	R16.8	
T_{i1}	0.56	0.63	0.67	0.70	Min T on sheathing behind stud at Tie Penetration
T_{i2}	0.71	0.78	0.82	0.85	Max T on sheathing at edge of Steel Stud Flange aligned with Tie Penetration

Detail 5.1.72

Exterior Insulated 3 5/8" x 1 5/8" Steel Stud (16" o.c.) Wall Assembly with Hohmann & Barnard Masonry Carbon Steel HB-213 2X Anchor Supporting Brick Veneer – Clear Wall

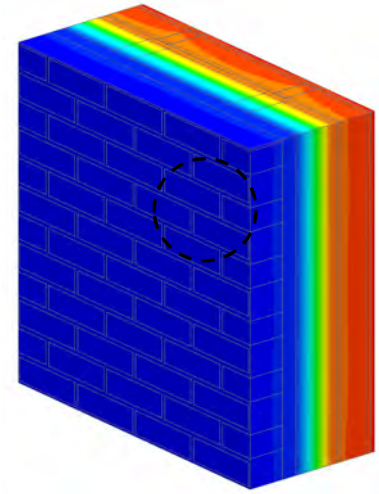

View of Exterior

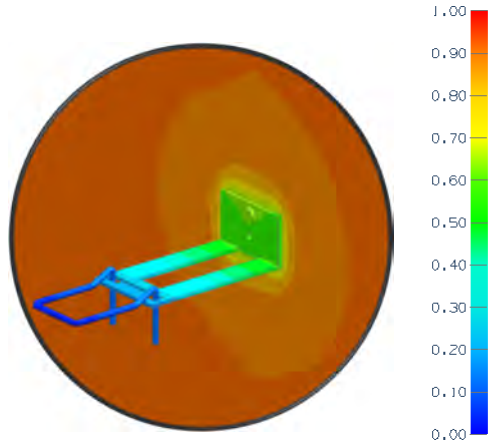

View of Anchoring Tie

Thermal Performance Indicators

Assembly 1D (Nominal) R-Value	R_{1D}	R-4.3 (0.76 RSI) + exterior insulation
Transmittance / Resistance	U_o, R_o	"Clear wall" U- and R-value
Surface Temperature Index[1]	T_i	0 = exterior temperature 1 = interior temperature

[1]Assumptions and limitations for surface temperatures identified in ASHRAE 1365-RP

Nominal (1D) vs. Assembly Performance Indicators

Exterior Insulation 1D R-Value (RSI)	R_{1D} ft²·hr·°F / Btu (m² K / W)	8" Vertical Clip Spacing		16" Vertical Clip Spacing		24" Vertical Clip Spacing	
		R_o ft²·hr·°F / Btu (m² K / W)	U_o Btu/ft² ·hr ·°F (W/m² K)	R_o ft²·hr·°F / Btu (m² K / W)	U_o Btu/ft² ·hr ·°F (W/m² K)	R_o ft²·hr·°F / Btu (m² K / W)	U_o Btu/ft² ·hr ·°F (W/m² K)
R-4.2 (0.74)	R-8.5 (1.50)	R-7.4 (1.30)	0.136 (0.770)	R-7.9 (1.39)	0.127 (0.722)	R-8.0 (1.42)	0.124 (0.706)
R-8.4 (1.48)	R-12.7 (2.24)	R-9.8 (1.72)	0.102 (0.580)	R-11.0 (1.94)	0.091 (0.516)	R-11.4 (2.01)	0.088 (0.498)
R-12.6 (2.22)	R-16.9 (2.96)	R-11.8 (2.08)	0.085 (0.480)	R-13.6 (2.39)	0.074 (0.418)	R-14.7 (2.58)	0.068 (0.387)
R-16.8 (2.96)	R-21.1 (3.72)	R-13.7 (2.40)	0.073 (0.416)	R-16.4 (2.89)	0.061 (0.346)	R-18.0 (3.17)	0.056 (0.315)

Temperature Indices

	R4.2	R8.4	R12.6	R16.8	
T_{i1}	0.59	0.64	0.69	0.71	Min T on sheathing behind stud at Tie Penetration
T_{i2}	0.72	0.78	0.82	0.84	Max T on sheathing at edge of Steel Stud Flange aligned with Tie Penetration

Detail 5.1.73

Exterior Insulated 3 5/8" x 1 5/8" Steel Stud (16" o.c.) Wall Assembly with Hohmann & Barnard Masonry Stainless Steel HB-213 2X Anchor Supporting Brick Veneer – Clear Wall

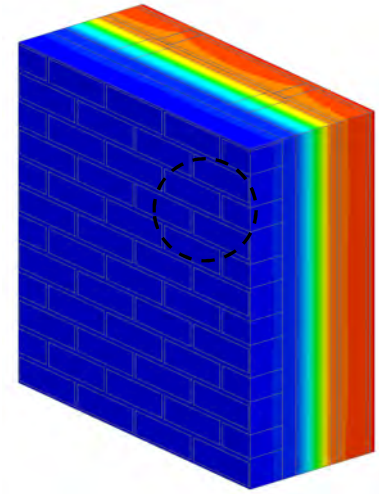

View of Exterior

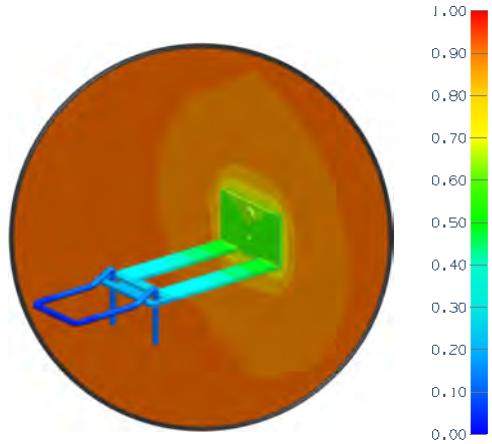

View of Anchoring Tie

Thermal Performance Indicators

Assembly 1D (Nominal) R-Value	R_{1D}	R-4.3 (0.76 RSI) + exterior insulation
Transmittance / Resistance	U_o, R_o	"Clear wall" U- and R-value
Surface Temperature Index[1]	T_i	0 = exterior temperature 1 = interior temperature

[1]Assumptions and limitations for surface temperatures identified in ASHRAE 1365-RP

Nominal (1D) vs. Assembly Performance Indicators

Exterior Insulation 1D R-Value (RSI)	R_{1D} ft²·hr·°F / Btu (m² K / W)	8" Vertical Clip Spacing		16" Vertical Clip Spacing		24" Vertical Clip Spacing	
		R_o ft²·hr·°F / Btu (m² K / W)	U_o Btu/ft² ·hr ·°F (W/m² K)	R_o ft²·hr·°F / Btu (m² K / W)	U_o Btu/ft² ·hr ·°F (W/m² K)	R_o ft²·hr·°F / Btu (m² K / W)	U_o Btu/ft² ·hr ·°F (W/m² K)
R-4.2 (0.74)	R-8.5 (1.50)	R-7.7 (1.35)	0.130 (0.740)	R-8.1 (1.43)	0.123 (0.701)	R-8.2 (1.45)	0.122 (0.691)
R-8.4 (1.48)	R-12.7 (2.24)	R-10.9 (1.92)	0.092 (0.520)	R-11.6 (2.04)	0.086 (0.490)	R-11.9 (2.1)	0.084 (0.476)
R-12.6 (2.22)	R-16.9 (2.96)	R-13.6 (2.39)	0.074 (0.418)	R-14.9 (2.62)	0.067 (0.382)	R-15.5 (2.74)	0.064 (0.365)
R-16.8 (2.96)	R-21.1 (3.72)	R-16 (2.81)	0.063 (0.356)	R-18.1 (3.19)	0.055 (0.313)	R-19.0 (3.35)	0.053 (0.298)

Temperature Indices

	R4.2	R8.4	R12.6	R16.8	
T_{i1}	0.66	0.73	0.78	0.81	Min T on sheathing behind stud at Tie Penetration
T_{i2}	0.73	0.80	0.84	0.87	Max T on sheathing at edge of Steel Stud Flange aligned with Tie Penetration

Detail 5.1.74

Exterior Insulated 3 5/8" x 1 5/8" Steel Stud (16" o.c.) Wall Assembly with Hohmann & Barnard Masonry Carbon Steel HB-200-X Steel Tie Supporting Brick Veneer – Clear Wall

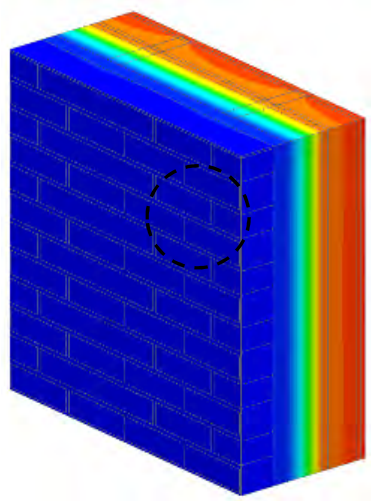

View of Exterior

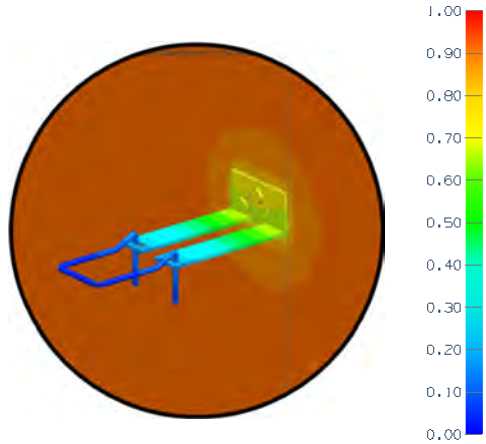

View of Anchoring Tie

Thermal Performance Indicators

Assembly 1D (Nominal) R-Value	R_{1D}	R-4.3 (0.76 RSI) + exterior insulation
Transmittance / Resistance	U_o, R_o	"Clear wall" U- and R-value
Surface Temperature Index[1]	T_i	0 = exterior temperature 1 = interior temperature

[1]Assumptions and limitations for surface temperatures identified in ASHRAE 1365-RP

Nominal (1D) vs. Assembly Performance Indicators

Exterior Insulation 1D R-Value (RSI)	R_{1D} ft²·hr·°F / Btu (m² K / W)	8" Vertical Clip Spacing		16" Vertical Clip Spacing		24" Vertical Clip Spacing	
		R_o ft²·hr·°F / Btu (m² K / W)	U_o Btu/ft² ·hr ·°F (W/m² K)	R_o ft²·hr·°F / Btu (m² K / W)	U_o Btu/ft² ·hr ·°F (W/m² K)	R_o ft²·hr·°F / Btu (m² K / W)	U_o Btu/ft² ·hr ·°F (W/m² K)
R-4.2 (0.74)	R-8.5 (1.50)	R-7.4 (1.31)	0.134 (0.762)	R-7.9 (1.39)	0.127 (0.719)	R-8.1 (1.43)	0.123 (0.699)
R-8.4 (1.48)	R-12.7 (2.24)	R-9.8 (1.72)	0.103 (0.582)	R-11 (1.94)	0.091 (0.517)	R-11.6 (2.04)	0.086 (0.489)
R-12.6 (2.22)	R-16.9 (2.96)	R-11.6 (2.05)	0.086 (0.488)	R-13.6 (2.39)	0.074 (0.418)	R-14.6 (2.57)	0.068 (0.388)
R-16.8 (2.96)	R-21.1 (3.72)	R-13.3 (2.34)	0.075 (0.428)	R-15.9 (2.81)	0.063 (0.356)	R-17.6 (3.10)	0.057 (0.323)

Temperature Indices

	R4.2	R8.4	R12.6	R16.8	
T_{i1}	0.61	0.64	0.69	0.71	Min T on sheathing behind stud at Tie Penetration
T_{i2}	0.72	0.78	0.82	0.84	Max T on sheathing at edge of Steel Stud Flange aligned with Tie Penetration

Detail 5.1.75

Exterior Insulated 3 5/8" x 1 5/8" Steel Stud (16" o.c.) Wall Assembly with Hohmann & Barnard Masonry Stainless Steel HB-200-X Anchor Supporting Brick Veneer – Clear Wall

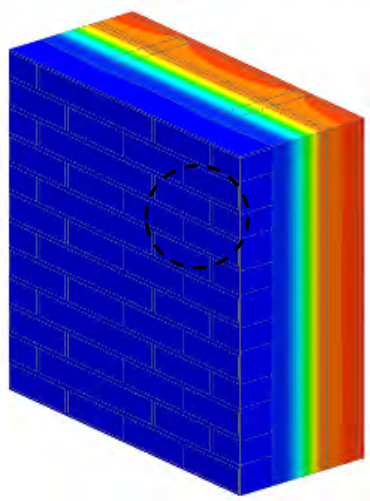

View of Exterior

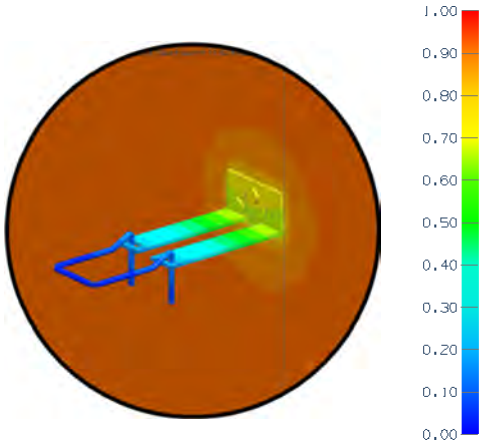

View of Anchoring Tie

Thermal Performance Indicators

Assembly 1D (Nominal) R-Value	R_{1D}	R-4.3 (0.76 RSI) + exterior insulation
Transmittance / Resistance	U_o, R_o	"Clear wall" U- and R-value
Surface Temperature Index[1]	T_i	0 = exterior temperature 1 = interior temperature

[1]Assumptions and limitations for surface temperatures identified in ASHRAE 1365-RP

Nominal (1D) vs. Assembly Performance Indicators

Exterior Insulation 1D R-Value (RSI)	R_{1D} ft²·hr·°F / Btu (m² K / W)	8" Vertical Clip Spacing		16" Vertical Clip Spacing		24" Vertical Clip Spacing	
		R_o ft²·hr·°F / Btu (m² K / W)	U_o Btu/ft² ·hr ·°F (W/m² K)	R_o ft²·hr·°F / Btu (m² K / W)	U_o Btu/ft² ·hr ·°F (W/m² K)	R_o ft²·hr·°F / Btu (m² K / W)	U_o Btu/ft² ·hr ·°F (W/m² K)
R-4.2 (0.74)	R-8.5 (1.50)	R-7.7 (1.36)	0.130 (0.738)	R-8.1 (1.43)	0.123 (0.698)	R-8.2 (1.45)	0.121 (0.690)
R-8.4 (1.48)	R-12.7 (2.24)	R-10.6 (1.86)	0.094 (0.536)	R-11.7 (2.06)	0.085 (0.485)	R-12.0 (2.11)	0.084 (0.475)
R-12.6 (2.22)	R-16.9 (2.96)	R-13.5 (2.38)	0.074 (0.421)	R-15.1 (2.65)	0.066 (0.377)	R-15.4 (2.72)	0.065 (0.368)
R-16.8 (2.96)	R-21.1 (3.72)	R-16.2 (2.86)	0.062 (0.350)	R-18 (3.16)	0.056 (0.316)	R-18.9 (3.33)	0.053 (0.300)

Temperature Indices

	R4.2	R8.4	R12.6	R16.8	
T_{i1}	0.66	0.73	0.77	0.80	Min T on sheathing behind stud at Tie Penetration
T_{i2}	0.73	0.80	0.84	0.90	Max T on sheathing at edge of Steel Stud Flange aligned with Tie Penetration

Detail 5.1.76

Exterior Insulated 3 5/8" x 1 5/8" Steel Stud (16" o.c.) Wall Assembly with Hohmann & Barnard Masonry Carbon Steel BL-407 Anchor Supporting Brick Veneer – Clear Wall

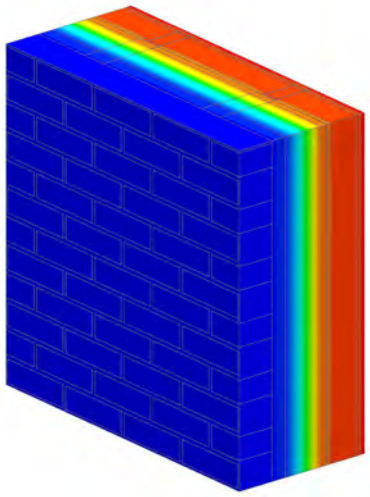

View from Interior

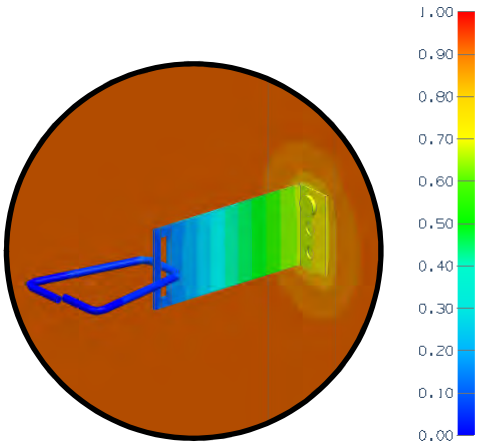

View of Anchoring Tie

Thermal Performance Indicators

Assembly 1D (Nominal) R-Value	R_{1D}	R-4.3 (0.76 RSI) + exterior insulation
Transmittance / Resistance	U_o, R_o	"clear wall" U- and R-value

[1]Assumptions and limitations for surface temperatures identified in ASHRAE 1365-RP

Nominal (1D) vs. Assembly Performance Indicators

Exterior Insulation 1D R-Value (RSI)	R_{1D} ft²·hr·°F / Btu (m² K / W)	8" Vertical Clip Spacing		16" Vertical Clip Spacing		24" Vertical Clip Spacing	
		R_o ft²·hr·°F / Btu (m² K / W)	U_o Btu/ft² ·hr ·°F (W/m² K)	R_o ft²·hr·°F / Btu (m² K / W)	U_o Btu/ft² ·hr ·°F (W/m² K)	R_o ft²·hr·°F / Btu (m² K / W)	U_o Btu/ft² ·hr ·°F (W/m² K)
R-4.2 (0.74)	R-8.5 (1.50)	R-7.3 (1.29)	0.136 (0.77)	R-7.7 (1.36)	0.129 (0.73)	R-7.8 (1.38)	0.128 (0.73)
R-8.4 (1.48)	R-12.7 (2.24)	R-10.1 (1.78)	0.099 (0.56)	R-11.2 (1.97)	0.089 (0.51)	R-11.5 (2.02)	0.087 (0.50)
R-12.6 (2.22)	R-16.9 (2.98)	R-12.5 (2.21)	0.080 (0.45)	R-14.4 (2.54)	0.069 (0.39)	R-14.9 (2.62)	0.067 (0.38)
R-16.8 (2.96)	R-21.1 (3.72)	R-14.8 (2.61)	0.068 (0.38)	R-17.4 (3.07)	0.057 (0.33)	R-18.2 (3.20)	0.055 (0.31)
R-21.0 (3.70)	R-25.3 (4.46)	R-16.9 (2.97)	0.059 (0.34)	R-20.4 (3.58)	0.049 (0.28)	R-21.4 (3.77)	0.047 (0.26)
R-25.2 (4.44)	R-29.5 (5.20)	R-18.9 (3.33)	0.053 (0.30)	R-23.2 (4.08)	0.043 (0.24)	R-24.6 (4.33)	0.041 (0.23)
R-29.4 (5.18)	R-33.7 (5.94)	R-20.9 (3.67)	0.048 (0.27)	R-25.9 (4.57)	0.039 (0.22)	R-27.7 (4.87)	0.036 (0.21)

Detail 5.1.77

Exterior Insulated 3 5/8" x 1 5/8" Steel Stud (16" o.c.) Wall Assembly with Hohmann & Barnard Masonry Stainless Steel BL-407 Anchor Supporting Brick Veneer – Clear Wall

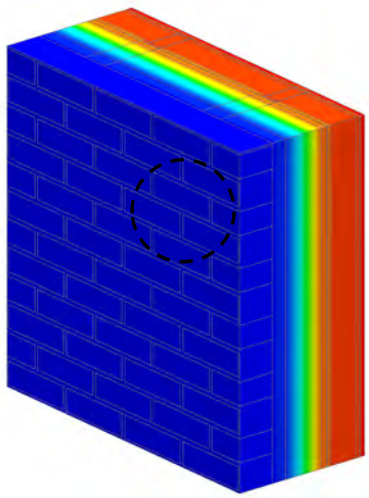

View of Exterior

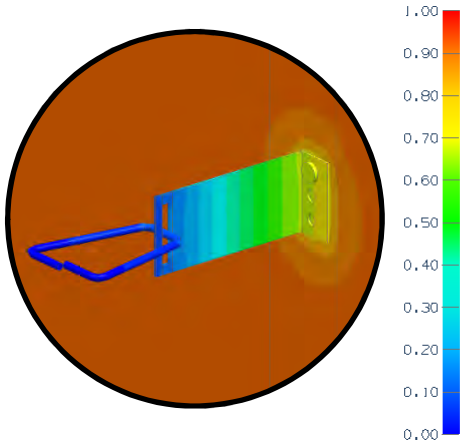

View of Anchoring Tie

Thermal Performance Indicators

Assembly 1D (Nominal) R-Value	R_{1D}	R-4.3 (0.76 RSI) + exterior insulation
Transmittance / Resistance	U_o, R_o	"Clear wall" U- and R-value
Surface Temperature Index[1]	T_i	0 = exterior temperature 1 = interior temperature

[1]Assumptions and limitations for surface temperatures identified in ASHRAE 1365-RP

Nominal (1D) vs. Assembly Performance Indicators

Exterior Insulation 1D R-Value (RSI)	R_{1D} ft²·hr·°F / Btu (m² K / W)	8" Vertical Clip Spacing		16" Vertical Clip Spacing		24" Vertical Clip Spacing	
		R_o ft²·hr·°F / Btu (m² K / W)	U_o Btu/ft² ·hr ·°F (W/m² K)	R_o ft²·hr·°F / Btu (m² K / W)	U_o Btu/ft² ·hr ·°F (W/m² K)	R_o ft²·hr·°F / Btu (m² K / W)	U_o Btu/ft² ·hr ·°F (W/m² K)
R-4.2 (0.74)	R-8.5 (1.50)	R-7.6 (1.33)	0.132 (0.751)	R-7.8 (1.38)	0.127 (0.724)	R-7.9 (1.39)	0.126 (0.718)
R-8.4 (1.48)	R-12.7 (2.24)	R-10.8 (1.9)	0.093 (0.525)	R-11.6 (2.04)	0.087 (0.491)	R-11.8 (2.07)	0.085 (0.483)
R-12.6 (2.22)	R-16.9 (2.96)	R-13.9 (2.45)	0.072 (0.408)	R-15.1 (2.67)	0.066 (0.375)	R-15.5 (2.73)	0.065 (0.366)
R-16.8 (2.96)	R-21.1 (3.72)	R-16.9 (2.98)	0.059 (0.336)	R-18.7 (3.29)	0.054 (0.304)	R-19.2 (3.39)	0.052 (0.295)

Temperature Indices

	R4.2	R8.4	R12.6	R16.8	
T_{i1}	0.65	0.74	0.78	0.82	Min T on sheathing behind stud at Tie Penetration
T_{i2}	0.73	0.81	0.85	0.88	Max T on sheathing at edge of Steel Stud Flange aligned with Tie Penetration

Detail 5.1.78

Exterior and Interior Insulated 6″ x 1 5/8″ Steel Stud (16″ o.c. and 24″ o.c.) Wall Assembly with Stainless Steel Brick Anchors Supporting Brick Veneer and R-20 Batt Insulation in Stud Cavity – Clear Wall

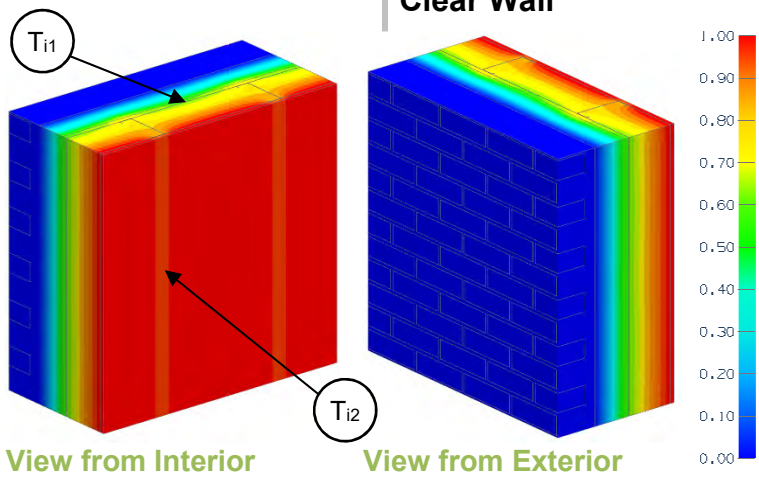

Thermal Performance Indicators

Assembly 1D (Nominal) R-Value	R_{1D}	R-23.4 (4.12 RSI) + exterior insulation
Transmittance / Resistance	U_o, R_o	"clear wall" U- and R-value
Surface Temperature Index[1]	T_i	0 = exterior temperature 1 = interior temperature

Nominal (1D) vs. Assembly Performance Indicators

Exterior Insulation 1D R-Value (RSI)	R_{1D} ft²·hr·°F / Btu (m² K / W)	16" o.c.		24" o.c.	
		R_o ft²·hr·°F / Btu (m² K / W)	U_o Btu/ft² ·hr ·°F (W/m² K)	R_o ft²·hr·°F / Btu (m² K / W)	U_o Btu/ft² ·hr ·°F (W/m² K)
R-5.0 (0.88)	R-28.4 (5.01)	R-16.9 (2.97)	0.059 (0.34)	R-19.5 (3.44)	0.051 (0.29)
R-7.5 (1.32)	R-30.9 (5.45)	R-19.0 (3.35)	0.053 (0.30)	R-21.7 (3.83)	0.046 (0.26)
R-10.0 (1.76)	R-33.4 (5.89)	R-21.1 (3.71)	0.047 (0.27)	R-23.9 (4.21)	0.042 (0.24)
R-15.0 (2.64)	R-38.4 (6.77)	R-25.2 (4.44)	0.040 (0.23)	R-28.3 (4.98)	0.035 (0.20)
R-20.0 (3.52)	R-43.4 (7.65)	R-28.8 (5.07)	0.035 (0.20)	R-32.2 (5.68)	0.031 (0.18)
R-25.0 (4.40)	R-48.4 (8.53)	R-32.8 (5.77)	0.030 (0.17)	R-36.5 (6.43)	0.027 (0.16)
R-30.0 (5.28)	R-53.4 (9.41)	R-36.7 (6.47)	0.027 (0.15)	R-40.7 (7.18)	0.025 (0.14)
R-35.0 (6.16)	R-58.4 (10.29)	R-40.7 (7.17)	0.025 (0.14)	R-45.0 (7.92)	0.022 (0.13)

Temperature Indices

	R5	R7.5	R10	R15	R20	R25	R30	R35	
T_{i1}	0.30	0.37	0.43	0.52	0.61	0.65	0.69	0.72	Min T on sheathing, between studs
T_{i2}	0.57	0.62	0.66	0.72	0.75	0.78	0.80	0.82	Max T on sheathing, along studs

Temperature indices taken from scenario with 16" o.c. studs. All other scenarios have higher minimum temperature index.

Detail 5.1.79

Exterior and Interior Insulated 6″ x 1 5/8″ Steel Stud (16″ o.c. and 24″ o.c.) Wall Assembly with Steel Brick Anchors Supporting Brick Veneer and R-20 Batt Insulation in Stud Cavity – Clear Wall

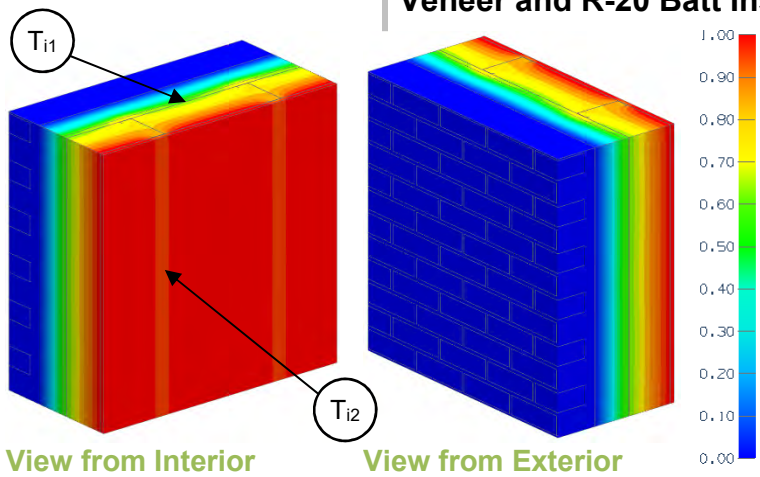

Thermal Performance Indicators

Assembly 1D (Nominal) R-Value	R_{1D}	R-23.4 (4.12 RSI) + exterior insulation
Transmittance / Resistance	U_o, R_o	"clear wall" U- and R-value
Surface Temperature Index[1]	T_i	0 = exterior temperature 1 = interior temperature

Nominal (1D) vs. Assembly Performance Indicators

Exterior Insulation 1D R-Value (RSI)	R_{1D} ft²·hr·°F / Btu (m² K / W)	16" o.c.		24" o.c.	
		R_o ft²·hr·°F / Btu (m² K / W)	U_o Btu/ft² ·hr ·°F (W/m² K)	R_o ft²·hr·°F / Btu (m² K / W)	U_o Btu/ft² ·hr ·°F (W/m² K)
R-20.0 (3.52)	R-43.4 (7.65)	R-26.3 (4.62)	0.038 (0.22)	R-30.3 (5.34)	0.033 (0.19)
R-25.0 (4.40)	R-48.4 (8.53)	R-29.3 (5.17)	0.034 (0.19)	R-33.9 (5.97)	0.030 (0.17)
R-30.0 (5.28)	R-53.4 (9.41)	R-32.2 (5.68)	0.031 (0.18)	R-37.4 (6.58)	0.027 (0.15)
R-35.0 (6.16)	R-58.4 (10.29)	R-35.4 (6.23)	0.028 (0.16)	R-40.8 (7.19)	0.025 (0.14)

Temperature Indices

	R20	R25	R30	R35	
T_{i1}	0.59	0.62	0.65	0.68	Min T on sheathing, between studs
T_{i2}	0.72	0.75	0.77	0.79	Max T on sheathing, along studs

Temperature indices taken from scenario with 16" o.c. studs. All other scenarios have higher minimum temperature index.

Detail 5.1.80

Exterior Insulated 6” x 1 5/8” Steel Stud (16” o.c.) Wall Assembly with ECO Cladding Alpha Vci Vertical System – Clear Wall

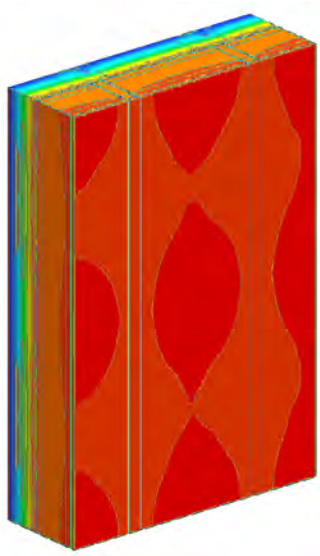

View from Interior

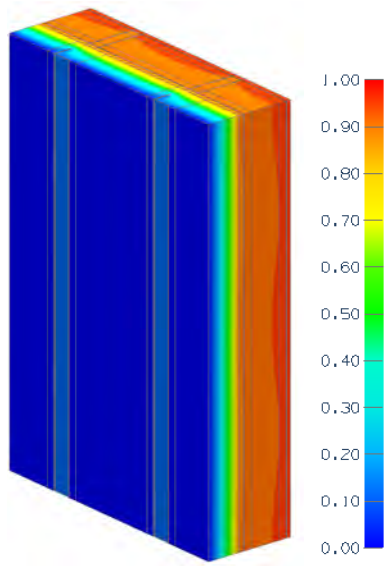

View from Exterior

Thermal Performance Indicators

Assembly 1D (Nominal) R-Value	R_{1D}	R-3.3 (0.57 RSI) + exterior insulation
Transmittance / Resistance	U_o, R_o	“clear field” U- and R-values
Surface Temperature Index[1]	T_i	0 = exterior temperature 1 = interior temperature

[1]Assumptions and limitations for surface temperatures identified in ASHRAE 1365-RP

Nominal (1D) vs. Assembly Performance Indicators

16” Horizontal Clip Spacing

Exterior Insulation 1D R-value (RSI)	R_{1D} ft²·hr·°F / Btu (m² K / W)	24” Vertical Spacing		36” Vertical Spacing	
		R_o ft²·hr·°F / Btu (m² K / W)	U_o Btu/ft² ·hr ·°F (W/m² K)	R_o ft²·hr·°F / Btu (m² K / W)	U_o Btu/ft² ·hr ·°F (W/m² K)
R-8.4 (1.48)	R-11.7 (2.05)	R-9.3 (1.64)	0.107 (0.609)	R-9.7 (1.72)	0.103 (0.583)
R-12.9 (2.28)	R-16.2 (2.85)	R-11.5 (2.02)	0.087 (0.494)	R-12.2 (2.16)	0.082 (0.464)
R-15.1 (2.66)	R-18.4 (3.23)	R-12.6 (2.21)	0.080 (0.452)	R-13.6 (2.39)	0.074 (0.419)
R-17.3 (3.04)	R-20.5 (3.61)	R-13.4 (2.35)	0.075 (0.425)	R-14.7 (2.58)	0.068 (0.387)
R-21.6 (3.80)	R-24.8 (4.37)	R-15.0 (2.64)	0.067 (0.379)	R-16.8 (2.96)	0.060 (0.338)
R-25.9 (4.56)	R-29.1 (5.13)	R-16.5 (2.91)	0.061 (0.344)	R-18.8 (3.31)	0.053 (0.302)

32” Horizontal and 24” Vertical Clip Spacing

Exterior Insulation 1D R-value (RSI)	R_{1D} ft²·hr·°F / Btu (m² K / W)	R_o ft²·hr·°F / Btu (m² K / W)	U_o Btu/ft² ·hr ·°F (W/m² K)
R-8.4 (1.48)	R-11.7 (2.05)	R-10.4 (1.83)	0.096 (0.547)
R-12.9 (2.28)	R-16.2 (2.85)	R-13.4 (2.37)	0.074 (0.422)
R-15.1 (2.66)	R-18.4 (3.23)	R-14.9 (2.63)	0.067 (0.381)
R-17.3 (3.04)	R-20.5 (3.61)	R-16.2 (2.85)	0.062 (0.351)
R-21.6 (3.80)	R-24.8 (4.37)	R-18.7 (3.29)	0.054 (0.304)
R-25.9 (4.56)	R-29.1 (5.13)	R-21.0 (3.70)	0.048 (0.270)

Detail 5.1.81

Exterior and Interior Insulated 6” x 1 5/8” Steel Stud (16” o.c.) Wall Assembly with ECO Cladding Alpha Vci Vertical System – Clear Wall

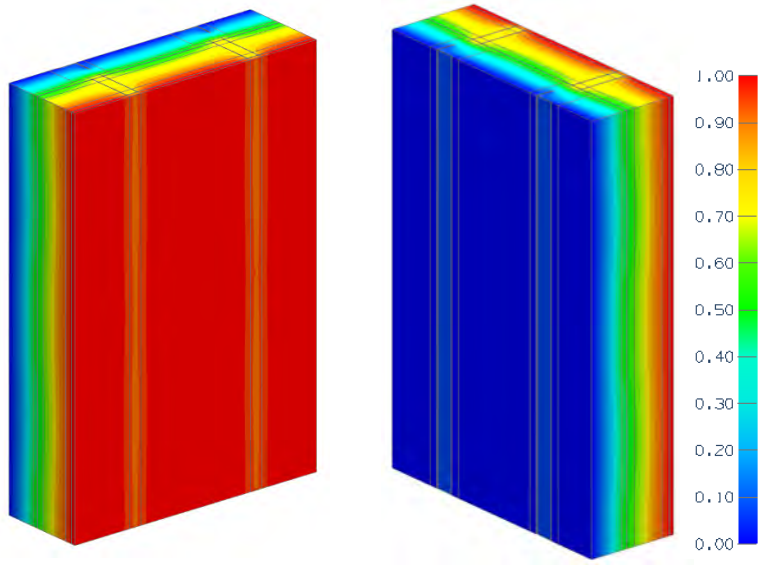

View from Interior

View from Exterior

Thermal Performance Indicators

Assembly 1D (Nominal) R-Value	R_{1D}	R-21.3 (3.75 RSI) + exterior insulation
Transmittance / Resistance	U_o, R_o	“clear field” U- and R-values
Surface Temperature Index[1]	T_i	0 = exterior temperature 1 = interior temperature

[1]Assumptions and limitations for surface temperatures identified in ASHRAE 1365-RP

Nominal (1D) vs. Assembly Performance Indicators

16” Horizontal Clip Spacing

Exterior Insulation 1D R-value (RSI)	R_{1D} ft²·hr·°F / Btu (m² K / W)	24” Vertical Spacing		36” Vertical Spacing	
		R_o ft²·hr·°F / Btu (m² K / W)	U_o Btu/ft² ·hr ·°F (W/m² K)	R_o ft²·hr·°F / Btu (m² K / W)	U_o Btu/ft² ·hr ·°F (W/m² K)
R-8.4 (1.48)	R-29.8 (5.24)	R-16.7 (2.94)	0.060 (0.340)	R-17.3 (3.05)	0.058 (0.328)
R-12.9 (2.28)	R-34.3 (6.04)	R-18.7 (3.29)	0.054 (0.304)	R-19.7 (3.47)	0.051 (0.288)
R-15.1 (2.66)	R-36.5 (6.42)	R-19.7 (3.47)	0.051 (0.288)	R-21.0 (3.70)	0.048 (0.270)
R-17.3 (3.04)	R-38.6 (6.80)	R-20.5 (3.61)	0.049 (0.277)	R-22.1 (3.90)	0.045 (0.257)
R-21.6 (3.80)	R-42.9 (7.56)	R-22.1 (3.89)	0.045 (0.257)	R-24.3 (4.28)	0.041 (0.234)
R-25.9 (4.56)	R-47.2 (8.32)	R-23.6 (4.16)	0.042 (0.240)	R-26.3 (4.63)	0.038 (0.216)

32” Horizontal and 24” Vertical Clip Spacing

Exterior Insulation 1D R-value (RSI)	R_{1D} ft²·hr·°F / Btu (m² K / W)	R_o ft²·hr·°F / Btu (m² K / W)	U_o Btu/ft² ·hr ·°F (W/m² K)
R-8.4 (1.48)	R-29.8 (5.24)	R-18.4 (3.23)	0.054 (0.309)
R-12.9 (2.28)	R-34.3 (6.04)	R-21.4 (3.76)	0.047 (0.266)
R-15.1 (2.66)	R-36.5 (6.42)	R-22.8 (4.02)	0.044 (0.249)
R-17.3 (3.04)	R-38.6 (6.80)	R-24.1 (4.25)	0.041 (0.235)
R-21.6 (3.80)	R-42.9 (7.56)	R-26.6 (4.69)	0.038 (0.213)
R-25.9 (4.56)	R-47.2 (8.32)	R-29.0 (5.11)	0.034 (0.196)

Detail 5.1.82

Exterior Insulated 6” x 1 5/8” Steel Stud (16” o.c.) Wall Assembly with ECO Cladding Alpha Hci Horizontal System – Clear Wall

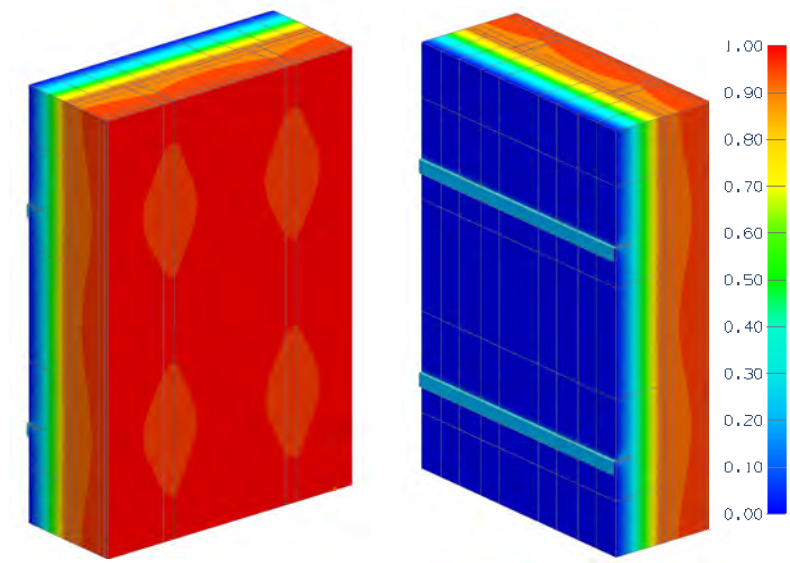

View from Interior

View from Exterior

Thermal Performance Indicators

Assembly 1D (Nominal) R-Value	R_{1D}	R-3.3 (0.57 RSI) + exterior insulation
Transmittance / Resistance	U_o, R_o	“clear field” U- and R-values
Surface Temperature Index[1]	T_i	0 = exterior temperature 1 = interior temperature

[1]Assumptions and limitations for surface temperatures identified in ASHRAE 1365-RP

Nominal (1D) vs. Assembly Performance Indicators

16” Horizontal Clip Spacing

Exterior Insulation 1D R-value (RSI)	R_{1D} ft²·hr·°F / Btu (m² K / W)	24” Vertical Spacing		36” Vertical Spacing	
		R_o ft²·hr·°F / Btu (m² K / W)	U_o Btu/ft² ·hr ·°F (W/m² K)	R_o ft²·hr·°F / Btu (m² K / W)	U_o Btu/ft² ·hr ·°F (W/m² K)
R-8.4 (1.48)	R-11.7 (2.05)	R-9.0 (1.58)	0.112 (0.633)	R-9.7 (1.71)	0.103 (0.584)
R-12.9 (2.28)	R-16.2 (2.85)	R-11.1 (1.95)	0.090 (0.512)	R-12.4 (2.18)	0.081 (0.459)
R-15.1 (2.66)	R-18.4 (3.23)	R-11.9 (2.09)	0.084 (0.478)	R-13.4 (2.37)	0.074 (0.423)
R-17.3 (3.04)	R-20.5 (3.61)	R-12.6 (2.21)	0.080 (0.452)	R-14.4 (2.53)	0.069 (0.395)
R-21.6 (3.80)	R-24.8 (4.37)	R-13.9 (2.45)	0.072 (0.408)	R-16.2 (2.86)	0.062 (0.350)
R-25.9 (4.56)	R-29.1 (5.13)	R-14.8 (2.61)	0.067 (0.383)	R-17.7 (3.11)	0.057 (0.322)

32” Horizontal and 24” Vertical Clip Spacing

Exterior Insulation 1D R-value (RSI)	R_{1D} ft²·hr·°F / Btu (m² K / W)	R_o ft²·hr·°F / Btu (m² K / W)	U_o Btu/ft² ·hr ·°F (W/m² K)
R-8.4 (1.48)	R-11.7 (2.05)	R-9.9 (1.75)	0.101 (0.572)
R-12.9 (2.28)	R-16.2 (2.85)	R-12.6 (2.22)	0.079 (0.450)
R-15.1 (2.66)	R-18.4 (3.23)	R-13.8 (2.44)	0.072 (0.410)
R-17.3 (3.04)	R-20.5 (3.61)	R-14.8 (2.60)	0.068 (0.384)
R-21.6 (3.80)	R-24.8 (4.37)	R-17.1 (3.01)	0.059 (0.332)
R-25.9 (4.56)	R-29.1 (5.13)	R-18.8 (3.31)	0.053 (0.302)

Detail 5.1.83

Exterior and Interior Insulated 6” x 1 5/8” Steel Stud (16” o.c.) Wall Assembly with ECO Cladding Alpha Hci Horizontal System – Clear Wall

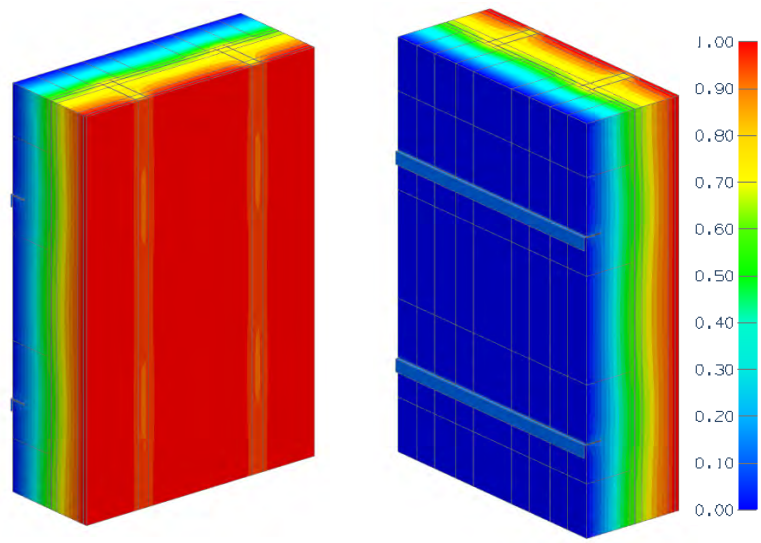

View from Interior

View from Exterior

Thermal Performance Indicators

Assembly 1D (Nominal) R-Value	R_{1D}	R-21.3 (3.75 RSI) + exterior insulation
Transmittance / Resistance	U_o, R_o	“clear field” U- and R-values
Surface Temperature Index[1]	T_i	0 = exterior temperature 1 = interior temperature

[1]Assumptions and limitations for surface temperatures identified in ASHRAE 1365-RP

Nominal (1D) vs. Assembly Performance Indicators

16” Horizontal Clip Spacing

Exterior Insulation 1D R-value (RSI)	R_{1D} ft²·hr·°F / Btu (m² K / W)	24” Vertical Spacing		36” Vertical Spacing	
		R_o ft²·hr·°F / Btu (m² K / W)	U_o Btu/ft² ·hr ·°F (W/m² K)	R_o ft²·hr·°F / Btu (m² K / W)	U_o Btu/ft² ·hr ·°F (W/m² K)
R-8.4 (1.48)	R-29.8 (5.24)	R-16.4 (2.90)	0.061 (0.345)	R-17.5 (3.08)	0.057 (0.324)
R-12.9 (2.28)	R-34.3 (6.04)	R-18.5 (3.25)	0.054 (0.308)	R-20.1 (3.54)	0.050 (0.282)
R-15.1 (2.66)	R-36.5 (6.42)	R-19.2 (3.38)	0.052 (0.296)	R-21.1 (3.72)	0.047 (0.269)
R-17.3 (3.04)	R-38.6 (6.80)	R-19.9 (3.50)	0.050 (0.286)	R-22.1 (3.89)	0.045 (0.257)
R-21.6 (3.80)	R-42.9 (7.56)	R-21.2 (3.73)	0.047 (0.268)	R-24.0 (4.22)	0.042 (0.237)
R-25.9 (4.56)	R-47.2 (8.32)	R-22.1 (3.90)	0.045 (0.256)	R-25.5 (4.48)	0.039 (0.223)

32” Horizontal and 24” Vertical Clip Spacing

Exterior Insulation 1D R-value (RSI)	R_{1D} ft²·hr·°F / Btu (m² K / W)	R_o ft²·hr·°F / Btu (m² K / W)	U_o Btu/ft² ·hr ·°F (W/m² K)
R-8.4 (1.48)	R-29.8 (5.24)	R-18.0 (3.17)	0.055 (0.315)
R-12.9 (2.28)	R-34.3 (6.04)	R-20.7 (3.65)	0.048 (0.274)
R-15.1 (2.66)	R-36.5 (6.42)	R-22.0 (3.87)	0.046 (0.259)
R-17.3 (3.04)	R-38.6 (6.80)	R-23.0 (4.04)	0.044 (0.247)
R-21.6 (3.80)	R-42.9 (7.56)	R-25.4 (4.46)	0.039 (0.224)
R-25.9 (4.56)	R-47.2 (8.32)	R-27.2 (4.79)	0.037 (0.209)

Detail 5.1.84

Exterior Insulated 3 5/8″ x 1 5/8″ Steel Stud (16″ O.C.) Wall Assembly with Armadillo FRR Horizontal Z-Girts Supporting Cladding – Clear Wall

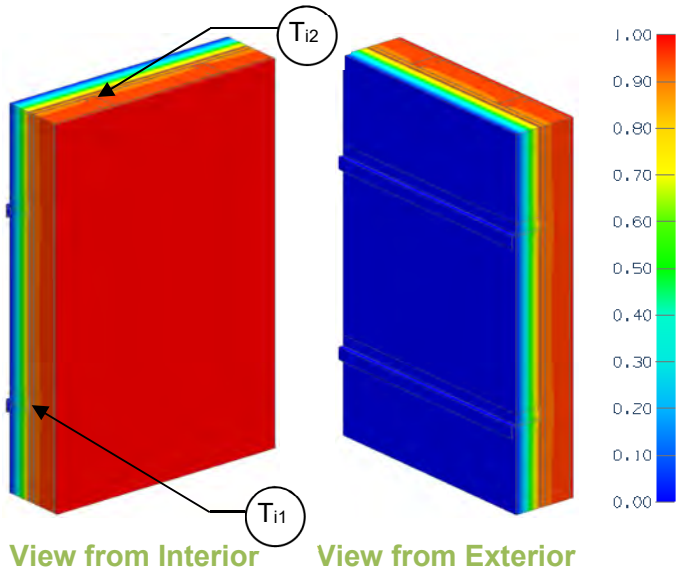

View from Interior View from Exterior

Thermal Performance Indicators

Assembly 1D (Nominal) R-Value	R_{1D}	R-3.3 (0.58 RSI) + exterior insulation
Transmittance / Resistance	U_o, R_o	"clear wall" U- and R-value
Surface Temperature Index[1]	T_i	0 = exterior temperature 1 = interior temperature

[1]Assumptions and limitations for surface temperatures identified in ASHRAE 1365-RP

Nominal (1D) vs. Assembly Performance Indicators

Exterior Insulation 1D R-Value (RSI)	R_{1D} ft²·hr·°F / Btu (m² K / W)	24" Vertical Girt Spacing		36" Vertical Girt Spacing		48" Vertical Girt Spacing	
		R_o ft²·hr·°F / Btu (m² K / W)	U_o Btu/ft² ·hr ·°F (W/m² K)	R_o ft²·hr·°F / Btu (m² K / W)	U_o Btu/ft² ·hr ·°F (W/m² K)	R_o ft²·hr·°F / Btu (m² K / W)	U_o Btu/ft² ·hr ·°F (W/m² K)
R-5.0 (0.88)	R-8.3 (1.46)	R-8.3 (1.46)	0.121 (0.69)	R-8.2 (1.44)	0.122 (0.69)	R-8.2 (1.45)	0.122 (0.69)
R-10.0 (1.76)	R-13.3 (2.34)	R-12.9 (2.28)	0.077 (0.44)	R-13.0 (2.29)	0.077 (0.44)	R-13.1 (2.31)	0.076 (0.43)
R-15.0 (2.64)	R-18.3 (3.22)	R-17.6 (3.10)	0.057 (0.32)	R-17.9 (3.15)	0.056 (0.32)	R-18.0 (3.16)	0.056 (0.32)
R-20.0 (3.52)	R-23.3 (4.10)	R-22.3 (3.93)	0.045 (0.25)	R-22.7 (4.00)	0.044 (0.25)	R-22.8 (4.02)	0.044 (0.25)
R-25.0 (4.40)	R-28.3 (4.98)	R-27.0 (4.75)	0.037 (0.21)	R-27.5 (4.85)	0.036 (0.21)	R-27.7 (4.88)	0.036 (0.20)
R-30.0 (5.28)	R-33.3 (5.86)	R-31.6 (5.57)	0.032 (0.18)	R-32.4 (5.70)	0.031 (0.18)	R-32.6 (5.74)	0.031 (0.17)
R-35.0 (6.16)	R-38.3 (6.74)	R-36.3 (6.39)	0.028 (0.16)	R-37.2 (6.56)	0.027 (0.15)	R-37.5 (6.60)	0.027 (0.15)

Temperature Indices

	R5	R10	R15	R20	R25	R30	R35	
T_{i1}	0.75	0.84	0.88	0.90	0.92	0.93	0.94	Min T on sheathing, along girts between studs
T_{i2}	0.78	0.86	0.90	0.92	0.93	0.94	0.95	Max T on sheathing, along studs between girts

Detail 5.1.85

Exterior and Interior Insulated 3 5/8″ x 1 5/8″ Steel Stud (16″ O.C.) Wall Assembly with Armadillo FRR Horizontal Z-Girts Supporting Cladding – Clear Wall

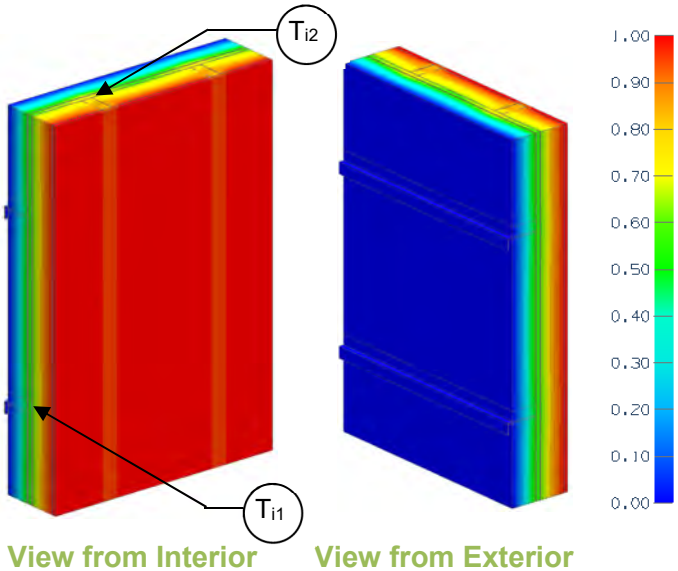

View from Interior View from Exterior

Thermal Performance Indicators

Assembly 1D (Nominal) R-Value	R_{1D}	R-15.4 (2.71 RSI) + exterior insulation
Transmittance / Resistance	U_o, R_o	"clear wall" U- and R-value
Surface Temperature Index[1]	T_i	0 = exterior temperature 1 = interior temperature

[1]Assumptions and limitations for surface temperatures identified in ASHRAE 1365-RP

Nominal (1D) vs. Assembly Performance Indicators

Exterior Insulation 1D R-Value (RSI)	R_{1D} ft²·hr·°F / Btu (m² K / W)	24" Vertical Girt Spacing		36" Vertical Girt Spacing		48" Vertical Girt Spacing	
		R_o ft²·hr·°F / Btu (m² K / W)	U_o Btu/ft² ·hr ·°F (W/m² K)	R_o ft²·hr·°F / Btu (m² K / W)	U_o Btu/ft² ·hr ·°F (W/m² K)	R_o ft²·hr·°F / Btu (m² K / W)	U_o Btu/ft² ·hr ·°F (W/m² K)
R-5.0 (0.88)	R-20.4 (3.59)	R-14.9 (2.63)	0.067 (0.38)	R-15.0 (2.64)	0.067 (0.38)	R-15.0 (2.65)	0.067 (0.38)
R-10.0 (1.76)	R-25.4 (4.47)	R-19.7 (3.47)	0.051 (0.29)	R-19.8 (3.49)	0.050 (0.29)	R-19.9 (3.51)	0.050 (0.29)
R-15.0 (2.64)	R-30.4 (5.35)	R-24.5 (4.31)	0.041 (0.23)	R-24.7 (4.35)	0.041 (0.23)	R-24.8 (4.37)	0.040 (0.23)
R-20.0 (3.52)	R-35.4 (6.23)	R-29.3 (5.15)	0.034 (0.19)	R-29.5 (5.20)	0.034 (0.19)	R-29.7 (5.23)	0.034 (0.19)
R-25.0 (4.40)	R-40.4 (7.11)	R-34.0 (5.99)	0.029 (0.17)	R-34.4 (6.06)	0.029 (0.17)	R-34.6 (6.09)	0.029 (0.16)
R-30.0 (5.28)	R-45.4 (7.99)	R-38.8 (6.84)	0.026 (0.15)	R-39.2 (6.91)	0.025 (0.14)	R-39.5 (6.95)	0.025 (0.14)
R-35.0 (6.16)	R-50.4 (8.87)	R-43.6 (7.68)	0.023 (0.13)	R-44.1 (7.76)	0.023 (0.13)	R-44.4 (7.81)	0.023 (0.13)

Temperature Indices

	R5	R10	R15	R20	R25	R30	R35	
T_{i1}	0.32	0.48	0.58	0.65	0.70	0.73	0.76	Min T on sheathing, along girts between studs
T_{i2}	0.57	0.67	0.74	0.78	0.81	0.84	0.85	Max T on sheathing, along studs between girts

Detail 5.1.86

Exterior Insulated 3 5/8″ x 1 5/8″ Steel Stud (16″ O.C.) Wall Assembly with Armadillo FRR Vertical Z-Girts Supporting Cladding – Clear Wall

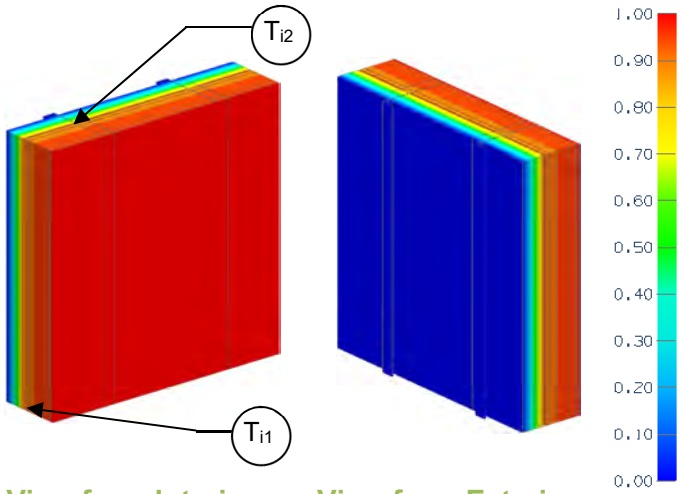

View from Interior View from Exterior

Thermal Performance Indicators

Assembly 1D (Nominal) R-Value	R_{1D}	R-3.3 (0.58 RSI) + exterior insulation
Transmittance / Resistance	U_o, R_o	"clear wall" U- and R-value
Surface Temperature Index[1]	T_i	0 = exterior temperature 1 = interior temperature

[1]Assumptions and limitations for surface temperatures identified in ASHRAE 1365-RP

Nominal (1D) vs. Assembly Performance Indicators

Exterior Insulation 1D R-Value (RSI)	R_{1D} ft²·hr·°F / Btu (m² K / W)	R_o ft²·hr·°F / Btu (m² K / W)	U_o Btu/ft² ·hr ·°F (W/m² K)
R-5.0 (0.88)	R-8.3 (1.46)	R-8.0 (1.41)	0.125 (0.71)
R-10.0 (1.76)	R-13.3 (2.34)	R-12.6 (2.22)	0.079 (0.45)
R-15.0 (2.64)	R-18.3 (3.22)	R-17.2 (3.03)	0.058 (0.33)
R-20.0 (3.52)	R-23.3 (4.1)	R-21.8 (3.84)	0.046 (0.26)
R-25.0 (4.40)	R-28.3 (4.98)	R-26.4 (4.64)	0.038 (0.22)
R-30.0 (5.28)	R-33.3 (5.86)	R-31.0 (5.46)	0.032 (0.18)
R-35.0 (6.16)	R-38.3 (6.74)	R-35.6 (6.26)	0.028 (0.16)

Temperature Indices

	R5	R10	R15	R20	R25	R30	R35	
T_{i1}	0.75	0.84	0.88	0.91	0.92	0.93	0.93	Min T on sheathing, along girts between studs
T_{i2}	0.76	0.85	0.89	0.91	0.93	0.94	0.94	Max T on sheathing, along studs between girts

Detail 5.1.87

Exterior and Interior Insulated 3 5/8″ x 1 5/8″ Steel Stud (16″ O.C.) Wall Assembly with Armadillo FRR Vertical Z-Girts Supporting Cladding – Clear Wall

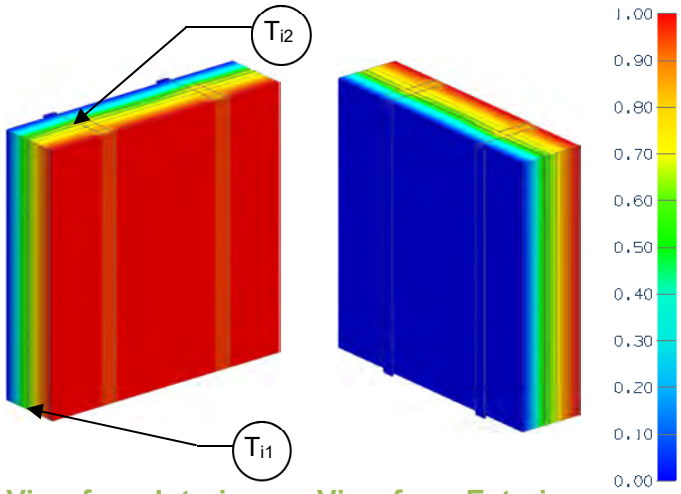

View from Interior View from Exterior

Thermal Performance Indicators

Assembly 1D (Nominal) R-Value	R_{1D}	R-15.4 (2.71 RSI) + exterior insulation
Transmittance / Resistance	U_o, R_o	"clear wall" U- and R-value
Surface Temperature Index[1]	T_i	0 = exterior temperature 1 = interior temperature

[1]Assumptions and limitations for surface temperatures identified in ASHRAE 1365-RP

Nominal (1D) vs. Assembly Performance Indicators

Exterior Insulation 1D R-Value (RSI)	R_{1D} ft²·hr·°F / Btu (m² K / W)	R_o ft²·hr·°F / Btu (m² K / W)	U_o Btu/ft² ·hr ·°F (W/m² K)
R-5.0 (0.88)	R-20.4 (3.59)	R-14.6 (2.56)	0.069 (0.39)
R-10.0 (1.76)	R-25.4 (4.47)	R-19.1 (3.37)	0.052 (0.30)
R-15.0 (2.64)	R-30.4 (5.35)	R-23.7 (4.18)	0.042 (0.24)
R-20.0 (3.52)	R-35.4 (6.23)	R-28.3 (4.99)	0.035 (0.20)
R-25.0 (4.40)	R-40.4 (7.11)	R-32.9 (5.79)	0.030 (0.17)
R-30.0 (5.28)	R-45.4 (7.99)	R-37.5 (6.60)	0.027 (0.15)
R-35.0 (6.16)	R-50.4 (8.87)	R-42.1 (7.41)	0.024 (0.13)

Temperature Indices

	R5	R10	R15	R20	R25	R30	R35	
T_{i1}	0.36	0.51	0.60	0.67	0.71	0.75	0.78	Min T on sheathing, along girts between studs
T_{i2}	0.56	0.67	0.73	0.78	0.81	0.83	0.85	Max T on sheathing, along studs between girts

Detail 5.1.88

Exterior Insulated 3 5/8" x 1 5/8" Steel Stud (16" o.c.) Wall Assembly with Brick Ties (24" o.c.) Supporting Brick Veneer – Clear Wall

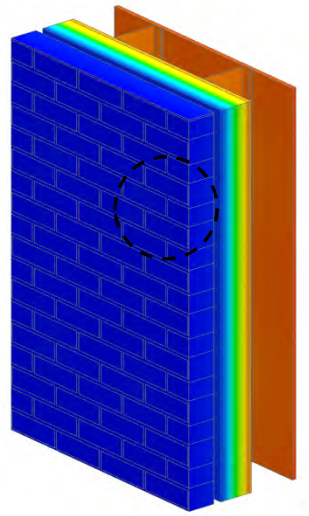

View of Exterior

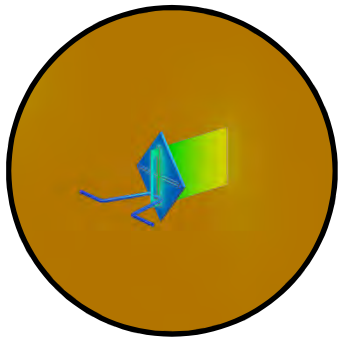

View of Anchoring Tie

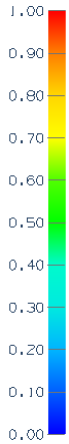

Thermal Performance Indicators

Assembly 1D (Nominal) R-Value	R_{1D}	R-4.3 (0.76 RSI) + exterior insulation
Transmittance / Resistance	U_o, R_o	"Clear wall" U- and R-value

Nominal (1D) vs. Assembly Performance Indicators

Exterior Insulation 1D R-Value (RSI)	R_{1D} ft²·hr·ºF / Btu (m² K / W)	R_o ft²·hr·ºF / Btu (m² K / W)	U_o Btu/ft² ·hr ·ºF (W/m² K)
R-16.8 (2.96)	R-21.1 (3.72)	R-16.1 (2.83)	0.062 (0.353)
R-24.0 (4.23)	R-28.3 (4.98)	R-19.8 (3.48)	0.051 (0.287)

Detail 5.1.89

Exterior Insulated 3 5/8" x 1 5/8" Steel Stud (16" o.c.) Wall Assembly with FERO Slotted Rap Ties (24" o.c.) Supporting Brick Veneer – Clear Wall

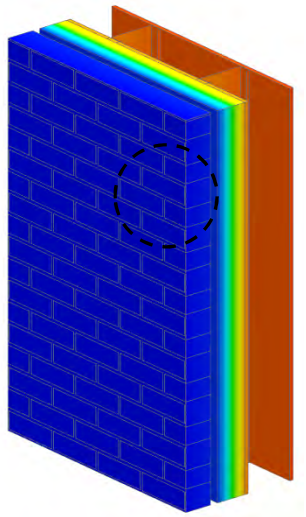

View of Exterior

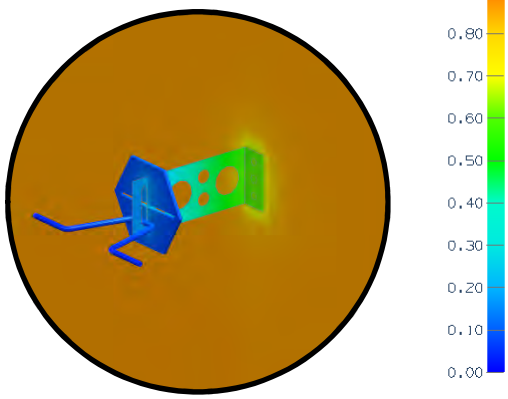

View of Anchoring Tie

Thermal Performance Indicators

Assembly 1D (Nominal) R-Value	R_{1D}	R-4.3 (0.76 RSI) + exterior insulation
Transmittance / Resistance	U_o, R_o	"Clear wall" U- and R-value

Nominal (1D) vs. Assembly Performance Indicators

Exterior Insulation 1D R-Value (RSI)	R_{1D} ft²·hr·°F / Btu (m² K / W)	Without Aerogel		With Aerogel	
		R_o ft²·hr·°F / Btu (m² K / W)	U_o Btu/ft² ·hr ·°F (W/m² K)	R_o ft²·hr·°F / Btu (m² K / W)	U_o Btu/ft² ·hr ·°F (W/m² K)
R-16.8 (2.96)	R-21.1 (3.72)	R-18.6 (3.28)	0.054 (0.305)	R-18.8 (3.32)	0.053 (0.302)
R-24.0 (4.23)	R-28.3 (4.98)	R-24.1 (4.25)	0.041 (0.235)	R-24.5 (4.31)	0.041 (0.232)

Detail 5.1.90

Exterior Insulated 6″ x 1 5/8″ Steel Stud (16″ O.C.) Wall Assembly with Fiber Reinforced Plastic Clip Supporting Cladding – Clear Wall

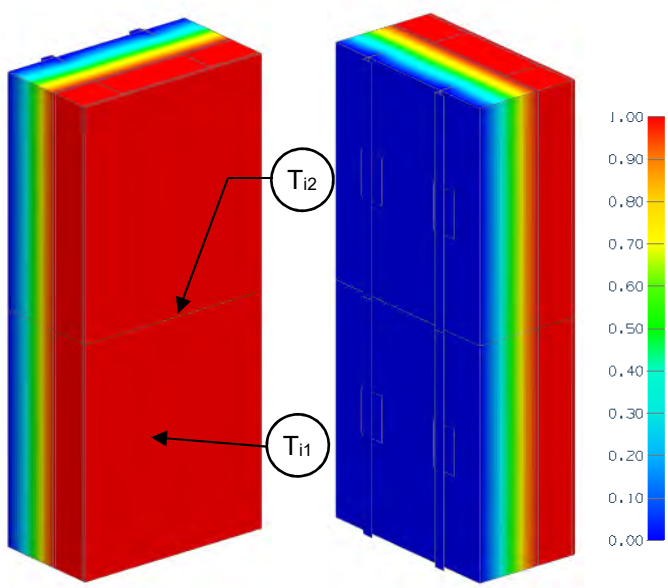

View from Interior View from Exterior

Thermal Performance Indicators

Assembly 1D (Nominal) R-Value	R_{1D}	R-3.2 (0.56) + insulation
Transmittance / Resistance without Anomaly	U_o, R_o	"clear field" U- and R-value, without connectors or joint
Point Transmittance	χ	Incremental increase in transmittance for connector
Surface Temperature Index[1]	T_i	0 = exterior temperature 1 = interior temperature

Nominal (1D) vs. Assembly Performance Indicators

Exterior Insulation 1D R-Value (RSI)	R_{1D} ft²·hr·°F / Btu (m² K / W)	R_o ft²·hr·°F / Btu (m² K / W)	U_o Btu/ft² ·hr ·°F (W/m² K)
R-25.2 (4.44)	R-28.4 (5.00)	R-24.0 (4.23)	0.042 (0.24)
R-33.6 (5.92)	R-36.8 (6.48)	R-31.1 (5.47)	0.032 (0.18)
R-42.0 (7.40)	R-45.2 (7.96)	R-40.0 (7.04)	0.025 (0.14)

Temperature Indices

	R25.2	R33.6	R42.0	
T_{i1}	0.89	0.92	0.94	Min T on sheathing, at clip and stud intersection
T_{i2}	0.92	0.94	0.95	Max T on sheathing, center of stud cavity between clips

Detail 5.1.91

Exterior and Interior Insulated 6″ x 1 5/8″ Steel Stud (16″ O.C.) Wall Assembly with Fiber Reinforced Plastic Clip Supporting Metal Cladding and R-19 Batt in Stud Cavity – Clear Wall

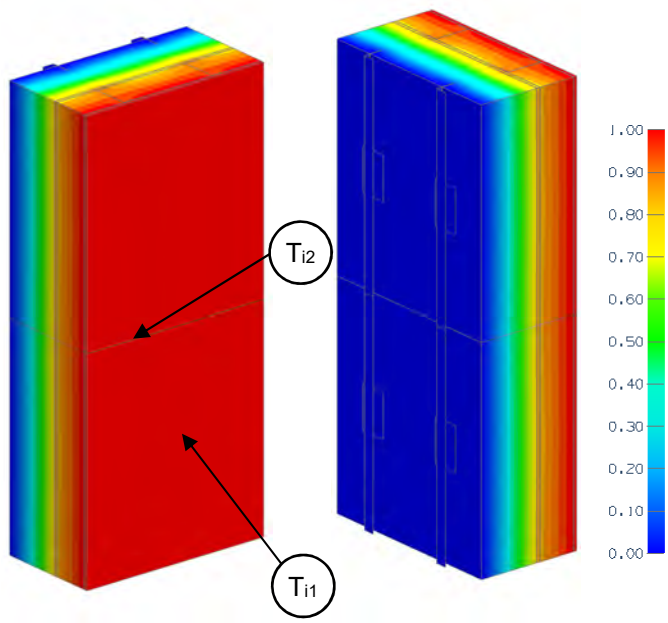

View from Interior View from Exterior

Thermal Performance Indicators

Assembly 1D (Nominal) R-Value	R_{1D}	R-21.3 (3.75) + insulation
Transmittance / Resistance without Anomaly	U_o, R_o	“clear field” U- and R-value, without connectors or joint
Point Transmittance	χ	Incremental increase in transmittance for connector
Surface Temperature Index[1]	T_i	0 = exterior temperature 1 = interior temperature

Nominal (1D) vs. Assembly Performance Indicators

Exterior Insulation 1D R-Value (RSI)	R_{1D} ft²·hr·°F / Btu (m² K / W)	R_o ft²·hr·°F / Btu (m² K / W)	U_o Btu/ft² ·hr ·°F (W/m² K)
R-25.2 (4.44)	R-46.5 (8.19)	R-32.1 (5.66)	0.031 (0.18)
R-33.6 (5.92)	R-54.9 (9.67)	R-39.3 (6.91)	0.025 (0.15)
R-42.0 (7.40)	R-63.3 (11.15)	R-48.3 (8.50)	0.021 (0.12)

Temperature Indices

	R25.2	R33.6	R42.0	
T_{i1}	0.62	0.69	0.75	Min T on sheathing, between studs
T_{i2}	0.79	0.83	0.86	Max T on sheathing, at stud, between clips

Detail 5.1.92

Exterior Insulated 6″ x 1 5/8″ Steel Stud (16″ O.C.) Wall Assembly with Double Aluminum Bracket Supporting Metal Cladding

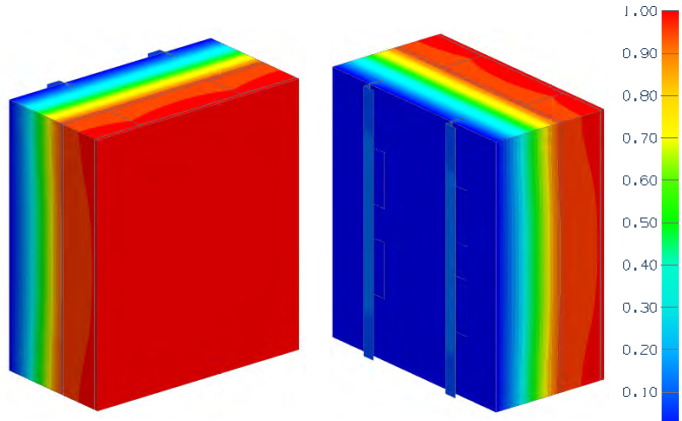

View from Interior View from Exterior

Thermal Performance Indicators

Assembly 1D (Nominal) R-Value	R_{1D}	R-3.2 (0.56) + insulation
Transmittance / Resistance	U, R	U- and R-values for overall assembly
Point Transmittance	χ	Incremental increase in transmittance for connector

Nominal (1D) vs. Assembly Performance Indicators

Exterior Insulation 1D R-Value (RSI)	R_{1D} ft²·hr·°F / Btu (m² K / W)	R ft²·hr·°F / Btu (m² K / W)	U Btu/ft² ·hr ·°F (W/m² K)	χ Btu/hr·°F (W/K)
R-25.2 (4.44)	R-28.4 (5.00)	R-12.8 (2.25)	0.078 (0.44)	0.073 (0.038)
R-33.6 (5.92)	R-36.8 (6.48)	R-13.9 (2.44)	0.072 (0.41)	0.080 (0.042)
R-42.0 (7.40)	R-45.2 (7.96)	R-14.7 (2.60)	0.068 (0.39)	0.086 (0.045)

Detail 5.1.93

Exterior and Interior Insulated 6″ x 1 5/8″ Steel Stud (16″ O.C.) Wall Assembly with Double Aluminum Bracket Supporting Metal Cladding

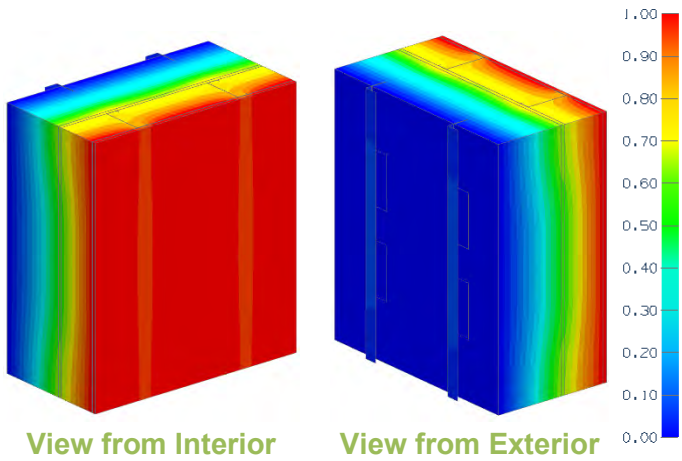

Thermal Performance Indicators

Assembly 1D (Nominal) R-Value	R_{1D}	R-21.3 (3.75) + insulation
Transmittance / Resistance	U, R	U- and R-values for overall assembly
Point Transmittance	χ	Incremental increase in transmittance for connector

Nominal (1D) vs. Assembly Performance Indicators

Exterior Insulation 1D R-Value (RSI)	R_{1D} ft²·hr·ºF / Btu (m² K / W)	R ft²·hr·ºF / Btu (m² K / W)	U Btu/ft² ·hr ·ºF (W/m² K)	χ Btu/hr·ºF (W/K)
R-25.2 (4.44)	R-46.5 (8.19)	R-20.2 (3.55)	0.050 (0.28)	0.037 (0.020)
R-33.6 (5.92)	R-54.9 (9.67)	R-21.3 (3.75)	0.047 (0.27)	0.043 (0.023)
R-42.0 (7.40)	R-63.3 (11.15)	R-22.2 (3.90)	0.045 (0.26)	0.049 (0.026)

Detail 5.1.94

Exterior Insulated 6″ x 1 5/8″ Steel Stud (16″ O.C.) Wall Assembly with Technoform Clip and Steel Fasteners - Clear Wall

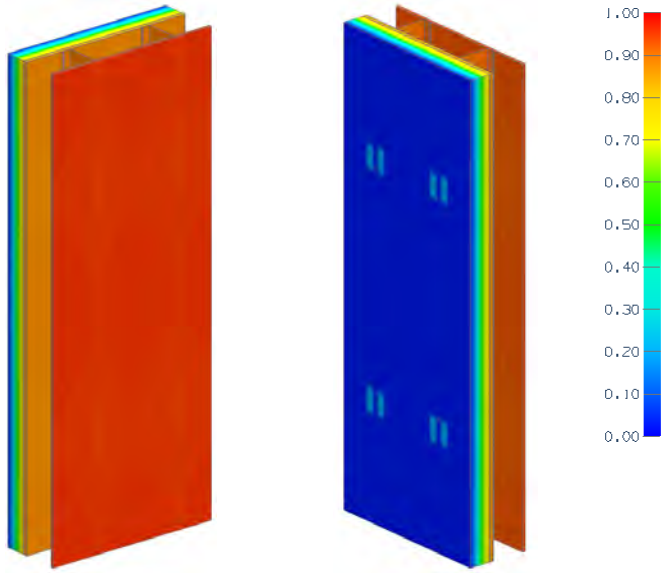

View from Interior View from Exterior

Thermal Performance Indicators

Assembly 1D (Nominal) R-Value	R_{1D}	R-3.30 (0.58 RSI) + exterior insulation
Transmittance / Resistance	U_o, R_o	“Clear wall” U- and R-value

Nominal (1D) vs. Assembly Performance Indicators

Exterior Insulation 1D R-Value (RSI)	R_{1D} ft²·hr·°F / Btu (m² K / W)	12” Vertical Clip Spacing		16” Vertical Clip Spacing		24” Vertical Clip Spacing		36” Vertical Clip Spacing		42” Vertical Clip Spacing	
		R_o ft²·hr·°F / Btu (m² K / W)	U_o Btu/ft² ·hr ·°F (W/m² K)	R_o ft²·hr·°F / Btu (m² K / W)	U_o Btu/ft² ·hr ·°F (W/m² K)	R_o ft²·hr·°F / Btu (m² K / W)	U_o Btu/ft² ·hr ·°F (W/m² K)	R_o ft²·hr·°F / Btu (m² K / W)	U_o Btu/ft² ·hr ·°F (W/m² K)	R_o ft²·hr·°F / Btu (m² K / W)	U_o Btu/ft² ·hr ·°F (W/m² K)
R-8.4 (1.48)	R-11.7 (2.06)	R-9.6 (1.70)	0.104 (0.59)	R-9.9 (1.75)	0.101 (0.57)	R-10.4 (1.83)	0.096 (0.55)	R-10.9 (1.92)	0.092 (0.52)	R-11.0 (1.94)	0.091 (0.51)
R-16.8 (2.96)	R-20.1 (3.54)	R-14.3 (2.51)	0.070 (0.40)	R-15.1 (2.65)	0.066 (0.38)	R-16.4 (2.88)	0.061 (0.35)	R-17.6 (3.11)	0.057 (0.32)	R-18.0 (3.16)	0.056 (0.32)
R-25.2 (4.44)	R-28.5 (5.02)	R-18.8 (3.31)	0.053 (0.30)	R-20.1 (3.54)	0.050 (0.28)	R-22.2 (3.91)	0.045 (0.26)	R-24.3 (4.28)	0.041 (0.23)	R-24.8 (4.37)	0.040 (0.23)
R-33.6 (5.92)	R-36.9 (6.50)	R-21.3 (3.76)	0.047 (0.27)	R-22.7 (4.00)	0.044 (0.25)	R-25.3 (4.46)	0.039 (0.22)	R-28.9 (5.08)	0.035 (0.20)	R-30.5 (5.36)	0.033 (0.19)

Detail 5.1.95

Exterior Insulated 6″ x 1 5/8″ Steel Stud (16″ O.C.) Wall Assembly with Technoform Clip and Stainless Steel Fasteners - Clear Wall

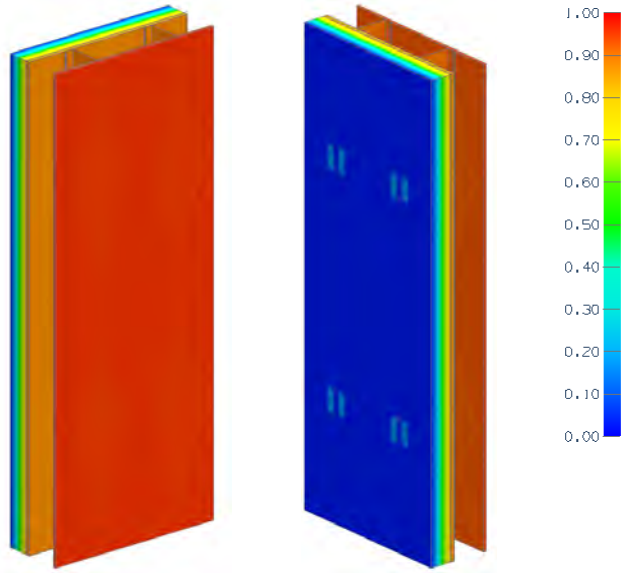

View from Interior View from Exterior

Thermal Performance Indicators

Assembly 1D (Nominal) R-Value	R_{1D}	R-3.30 (0.58 RSI) + exterior insulation
Transmittance / Resistance	U_o, R_o	“Clear wall” U- and R-value

Nominal (1D) vs. Assembly Performance Indicators

Exterior Insulation 1D R-Value (RSI)	R_{1D} ft²·hr·°F / Btu (m² K / W)	12” Vertical Clip Spacing		16” Vertical Clip Spacing		24” Vertical Clip Spacing		36” Vertical Clip Spacing		42” Vertical Clip Spacing	
		R_o ft²·hr·°F / Btu (m² K / W)	U_o Btu/ft² ·hr ·°F (W/m² K)	R_o ft²·hr·°F / Btu (m² K / W)	U_o Btu/ft² ·hr ·°F (W/m² K)	R_o ft²·hr·°F / Btu (m² K / W)	U_o Btu/ft² ·hr ·°F (W/m² K)	R_o ft²·hr·°F / Btu (m² K / W)	U_o Btu/ft² ·hr ·°F (W/m² K)	R_o ft²·hr·°F / Btu (m² K / W)	U_o Btu/ft² ·hr ·°F (W/m² K)
R-8.4 (1.48)	R-11.7 (2.06)	R-10.0 (1.76)	0.100 (0.57)	R-10.2 (1.80)	0.098 (0.56)	R-10.7 (1.88)	0.094 (0.53)	R-11.1 (1.95)	0.090 (0.51)	R-11.2 (1.97)	0.090 (0.51)
R-16.8 (2.96)	R-20.1 (3.54)	R-15.5 (2.73)	0.065 (0.37)	R-16.2 (2.85)	0.062 (0.35)	R-17.2 (3.04)	0.058 (0.33)	R-18.3 (3.22)	0.055 (0.31)	R-18.5 (3.26)	0.054 (0.31)
R-25.2 (4.44)	R-28.5 (5.02)	R-21.4 (3.77)	0.047 (0.27)	R-22.4 (3.95)	0.045 (0.25)	R-24.1 (4.24)	0.042 (0.24)	R-25.7 (4.52)	0.039 (0.22)	R-26.0 (4.59)	0.038 (0.22)
R-33.6 (5.92)	R-36.9 (6.50)	R-24.7 (4.34)	0.041 (0.23)	R-26.0 (4.57)	0.039 (0.22)	R-28.3 (4.99)	0.035 (0.20)	R-31.2 (5.49)	0.032 (0.18)	R-32.3 (5.69)	0.031 (0.18)

Detail 5.1.96

Exterior and Interior Insulated 6” x 1 5/8” Steel Stud (16” o.c.) Wall Assembly with Galvanized Horizontal Intermittent Clips (24” o.c.) Supporting Metal Cladding and Owens Corning R-20 Batt Insulation in Stud Cavity – Clear Wall

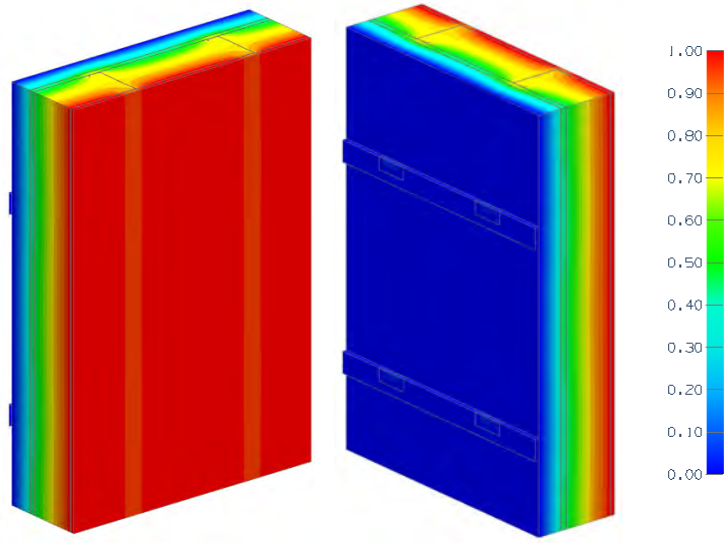

View from Interior View from Exterior

Thermal Performance Indicators

Assembly 1D (Nominal) R-Value	R_{1D}	R-22.4 (3.94 RSI) + exterior insulation
Transmittance / Resistance without Anomaly	U_o, R_o	“clear wall” U- and R-value

[1]Assumptions and limitations for surface temperatures identified in ASHRAE 1365-RP

Nominal (1D) vs. Assembly Performance Indicators

Exterior Insulation 1D R-Value (RSI)	R_{1D} ft²·hr·°F / Btu (m² K / W)	R_o ft²·hr·°F / Btu (m² K / W)	U_o Btu/ft² ·hr ·°F (W/m² K)
R-6.3 (1.11)	R-28.7 (5.05)	R-17.1 (3.02)	0.058 (0.33)
R-8.4 (1.48)	R-30.8 (5.42)	R-18.7 (3.29)	0.054 (0.30)
R-12.6 (2.22)	R-35.0 (6.16)	R-21.6 (3.80)	0.046 (0.26)
R-16.8 (2.96)	R-39.2 (6.90)	R-24.3 (4.27)	0.041 (0.23)
R-21.0 (3.70)	R-43.4 (7.64)	R-26.8 (4.72)	0.037 (0.21)

Detail 5.1.97

Exterior and Interior Insulated 6” x 1 5/8” Steel Stud (16” o.c.) Wall Assembly with Galvanized Horizontal Intermittent Clips (24” o.c.) Supporting Metal Cladding and Owens Corning R-22.5 Batt Insulation in Stud Cavity – Clear Wall

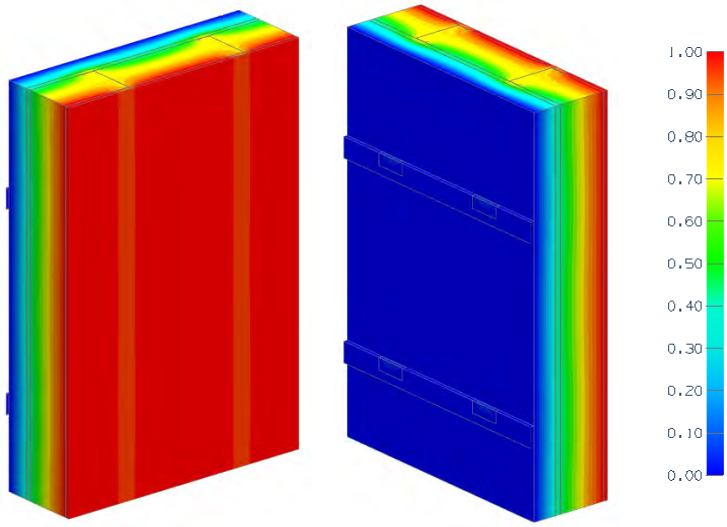

View from Interior View from Exterior

Thermal Performance Indicators

Assembly 1D (Nominal) R-Value	R_{1D}	R-24.9 (4.38 RSI) + exterior insulation
Transmittance / Resistance without Anomaly	U_o, R_o	“clear wall” U- and R-value

[1]Assumptions and limitations for surface temperatures identified in ASHRAE 1365-RP

Nominal (1D) vs. Assembly Performance Indicators

Exterior Insulation 1D R-Value (RSI)	R_{1D} ft²·hr·°F / Btu (m² K / W)	R_o ft²·hr·°F / Btu (m² K / W)	U_o Btu/ft² ·hr ·°F (W/m² K)
R-6.3 (1.11)	R-31.2 (5.49)	R-17.8 (3.13)	0.056 (0.32)
R-8.4 (1.48)	R-33.3 (5.86)	R-19.3 (3.40)	0.052 (0.29)
R-12.6 (2.22)	R-37.5 (6.60)	R-22.2 (3.91)	0.045 (0.26)
R-16.8 (2.96)	R-41.7 (7.34)	R-24.9 (4.38)	0.040 (0.23)
R-21.0 (3.70)	R-45.9 (8.08)	R-27.4 (4.83)	0.036 (0.21)

Detail 5.1.98

Exterior and Interior Insulated 6” x 1 5/8” Steel Stud (16” o.c.) Wall Assembly with Galvanized Horizontal Intermittent Clips (24” o.c.) Supporting Metal Cladding and Owens Corning R-24 Batt Insulation in Stud Cavity – Clear Wall

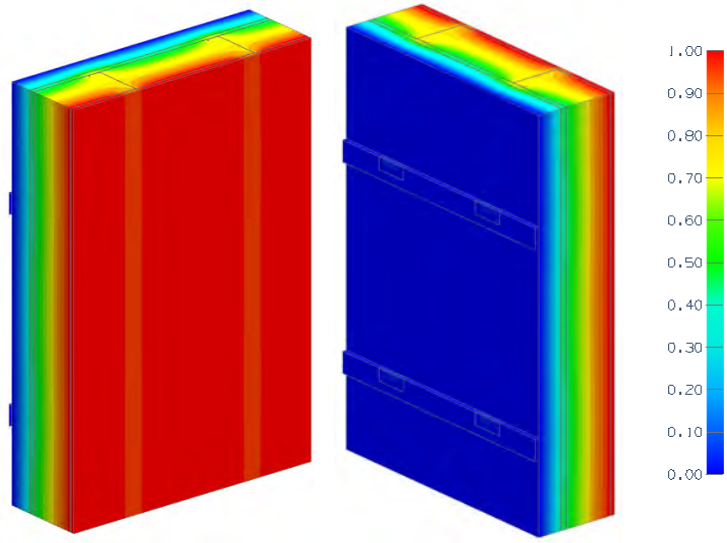

View from Interior View from Exterior

Thermal Performance Indicators

Assembly 1D (Nominal) R-Value	R_{1D}	R-26.4 (4.65 RSI) + exterior insulation
Transmittance / Resistance without Anomaly	U_o, R_o	“clear wall” U- and R-value

[1]Assumptions and limitations for surface temperatures identified in ASHRAE 1365-RP

Nominal (1D) vs. Assembly Performance Indicators

Exterior Insulation 1D R-Value (RSI)	R_{1D} ft²·hr·°F / Btu (m² K / W)	R_o ft²·hr·°F / Btu (m² K / W)	U_o Btu/ft² ·hr ·°F (W/m² K)
R-6.3 (1.11)	R-32.7 (5.76)	R-18.1 (3.19)	0.055 (0.31)
R-8.4 (1.48)	R-34.8 (6.13)	R-19.6 (3.46)	0.051 (0.29)
R-12.6 (2.22)	R-39.0 (6.87)	R-22.5 (3.97)	0.044 (0.25)
R-16.8 (2.96)	R-43.2 (7.61)	R-25.2 (4.44)	0.040 (0.23)
R-21.0 (3.70)	R-47.4 (8.34)	R-27.8 (4.89)	0.036 (0.20)

Detail 5.1.99

Exterior Insulated 6” x 1 5/8” Steel Stud (16” o.c.) Wall Assembly with EJOT Crossfix Console and Horizontal Rail System Supporting Metal Cladding - Clear Wall

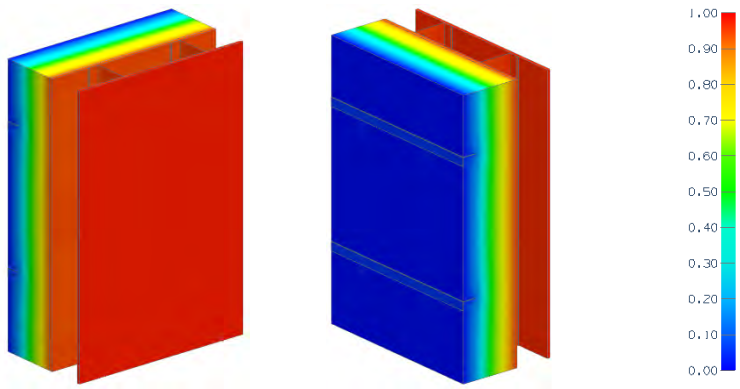

View from Interior View from Exterior

Thermal Performance Indicators

Assembly 1D (Nominal) R-Value	R_{1D}	R-3.30 (0.58 RSI) + exterior insulation
Transmittance / Resistance	U_o, R_o	“Clear wall” U- and R-value

Nominal (1D) vs. Assembly Performance Indicators

16” Horizontal Console Spacing

Exterior Insulation 1D R-Value (RSI)	R_{1D} ft²·hr·°F / Btu (m² K / W)	24” Vertical Clip Spacing		36” Vertical Clip Spacing		48” Vertical Clip Spacing	
		R_o ft²·hr·°F / Btu (m² K / W)	U_o Btu/ft² ·hr ·°F (W/m² K)	R_o ft²·hr·°F / Btu (m² K / W)	U_o Btu/ft² ·hr ·°F (W/m² K)	R_o ft²·hr·°F / Btu (m² K / W)	U_o Btu/ft² ·hr ·°F (W/m² K)
R-8.4 (1.48)	R-11.7 (2.06)	R-10.2 (1.80)	0.098 (0.55)	R-10.7 (1.88)	0.094 (0.53)	R-10.9 (1.92)	0.092 (0.52)
R-12.6 (2.22)	R-15.9 (2.80)	R-13.6 (2.39)	0.076 (0.43)	R-14.2 (2.51)	0.073 (0.41)	R-14.6 (2.58)	0.071 (0.40)
R-14.7 (2.59)	R-18.0 (3.17)	R-15.2 (2.68)	0.066 (0.37)	R-16.0 (2.82)	0.062 (0.35)	R-16.5 (2.90)	0.061 (0.34)
R-21.0 (3.70)	R-24.3 (4.28)	R-20.1 (3.54)	0.050 (0.28)	R-21.3 (3.76)	0.047 (0.27)	R-22.0 (3.88)	0.045 (0.26)
R-27.3 (4.81)	R-30.6 (5.39)	R-25.0 (4.40)	0.042 (0.24)	R-26.6 (4.69)	0.040 (0.22)	R-27.5 (4.85)	0.038 (0.22)
R-35.7 (6.29)	R-39.0 (6.87)	R-31.5 (5.55)	0.032 (0.18)	R-33.7 (5.93)	0.030 (0.17)	R-34.9 (6.14)	0.029 (0.16)
R-42.0 (7.40)	R-45.3 (7.98)	R-36.1 (6.36)	0.028 (0.16)	R-38.7 (6.82)	0.026 (0.15)	R-40.2 (7.08)	0.025 (0.14)
R-48.3 (8.51)	R-51.6 (9.08)	R-40.7 (7.18)	0.025 (0.14)	R-43.8 (7.72)	0.023 (0.13)	R-45.5 (8.02)	0.022 (0.13)
R-54.6 (9.62)	R-57.9 (10.19)	R-45.4 (7.99)	0.022 (0.13)	R-48.9 (8.61)	0.020 (0.12)	R-50.9 (8.96)	0.020 (0.11)
R-60.9 (10.73)	R-64.2 (11.30)	R-50.0 (8.80)	0.020 (0.11)	R-54.0 (9.50)	0.019 (0.11)	R-56.2 (9.90)	0.018 (0.10)
R-67.2 (11.84)	R-70.5 (12.41)	R-54.6 (9.61)	0.018 (0.10)	R-59.0 (10.39)	0.017 (0.10)	R-61.5 (10.84)	0.016 (0.09)

32” Horizontal Console Spacing

Exterior Insulation 1D R-Value (RSI)	R_{1D} ft²·hr·°F / Btu (m² K / W)	24” Vertical Clip Spacing		36” Vertical Clip Spacing		48” Vertical Clip Spacing	
		R_o ft²·hr·°F / Btu (m² K / W)	U_o Btu/ft² ·hr ·°F (W/m² K)	R_o ft²·hr·°F / Btu (m² K / W)	U_o Btu/ft² ·hr ·°F (W/m² K)	R_o ft²·hr·°F / Btu (m² K / W)	U_o Btu/ft² ·hr ·°F (W/m² K)
R-8.4 (1.48)	R-11.7 (2.06)	R-10.7 (1.88)	0.094 (0.53)	R-11.0 (1.94)	0.091 (0.52)	R-11.2 (1.97)	0.090 (0.51)
R-12.6 (2.22)	R-15.9 (2.80)	R-14.2 (2.50)	0.073 (0.41)	R-14.7 (2.59)	0.071 (0.40)	R-15.0 (2.64)	0.069 (0.39)
R-14.7 (2.59)	R-18.0 (3.17)	R-16.0 (2.81)	0.063 (0.36)	R-16.6 (2.92)	0.060 (0.34)	R-16.9 (2.98)	0.059 (0.34)
R-21.0 (3.70)	R-24.3 (4.28)	R-21.5 (3.79)	0.046 (0.26)	R-22.4 (3.94)	0.045 (0.25)	R-22.8 (4.02)	0.044 (0.25)
R-27.3 (4.81)	R-30.6 (5.39)	R-27.0 (4.76)	0.039 (0.22)	R-28.1 (4.95)	0.038 (0.21)	R-28.7 (5.05)	0.037 (0.21)
R-35.7 (6.29)	R-39.0 (6.87)	R-34.4 (6.05)	0.029 (0.17)	R-35.8 (6.30)	0.028 (0.16)	R-36.5 (6.43)	0.027 (0.16)
R-42.0 (7.40)	R-45.3 (7.98)	R-39.7 (6.99)	0.025 (0.14)	R-41.4 (7.29)	0.024 (0.14)	R-42.3 (7.45)	0.024 (0.13)
R-48.3 (8.51)	R-51.6 (9.08)	R-45.0 (7.93)	0.023 (0.13)	R-47.0 (8.28)	0.022 (0.12)	R-48.1 (8.47)	0.021 (0.12)
R-54.6 (9.62)	R-57.9 (10.19)	R-50.4 (8.88)	0.020 (0.11)	R-52.6 (9.27)	0.019 (0.11)	R-53.9 (9.49)	0.019 (0.11)
R-60.9 (10.73)	R-64.2 (11.30)	R-55.7 (9.81)	0.018 (0.10)	R-58.3 (10.26)	0.017 (0.10)	R-59.6 (10.51)	0.017 (0.10)
R-67.2 (11.84)	R-70.5 (12.41)	R-61.0 (10.75)	0.016 (0.09)	R-63.9 (11.25)	0.016 (0.09)	R-65.4 (11.52)	0.015 (0.09)

Detail 5.1.100

Exterior and Interior Insulated 6” x 1 5/8” Steel Stud (16” o.c.) Wall Assembly with EJOT Crossfix Console and Horizontal Rail System Supporting Metal Cladding and R-20 Batt Insulation in Stud Cavity - Clear Wall

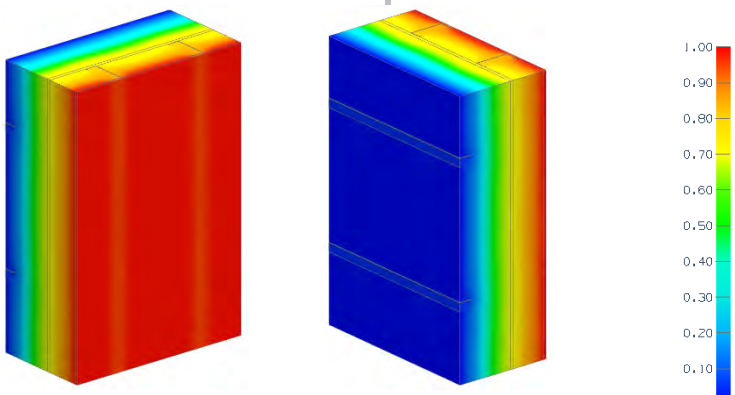

View from Interior View from Exterior

Thermal Performance Indicators

Assembly 1D (Nominal) R-Value	R_{1D}	R-22.4 (3.94 RSI) + exterior insulation
Transmittance / Resistance	U_o, R_o	“Clear wall” U- and R-value

Nominal (1D) vs. Assembly Performance Indicators

16” Horizontal Console Spacing

Exterior Insulation 1D R-Value (RSI)	R_{1D} ft²·hr·°F / Btu (m² K / W)	24” Vertical Clip Spacing		36” Vertical Clip Spacing		48” Vertical Clip Spacing	
		R_o ft²·hr·°F / Btu (m² K / W)	U_o Btu/ft² ·hr ·°F (W/m² K)	R_o ft²·hr·°F / Btu (m² K / W)	U_o Btu/ft² ·hr ·°F (W/m² K)	R_o ft²·hr·°F / Btu (m² K / W)	U_o Btu/ft² ·hr ·°F (W/m² K)
R-8.4 (1.48)	R-30.8 (5.42)	R-18.6 (3.27)	0.054 (0.31)	R-19.2 (3.39)	0.052 (0.30)	R-19.6 (3.45)	0.051 (0.29)
R-12.6 (2.22)	R-35.0 (6.16)	R-21.8 (3.85)	0.046 (0.26)	R-22.8 (4.01)	0.044 (0.25)	R-23.3 (4.10)	0.044 (0.25)
R-14.7 (2.59)	R-37.1 (6.53)	R-23.5 (4.14)	0.043 (0.24)	R-24.6 (4.33)	0.041 (0.23)	R-25.2 (4.43)	0.040 (0.23)
R-21.0 (3.70)	R-43.4 (7.64)	R-28.3 (4.98)	0.035 (0.20)	R-29.8 (5.24)	0.034 (0.19)	R-30.6 (5.39)	0.033 (0.19)
R-27.3 (4.81)	R-49.7 (8.75)	R-33.1 (5.83)	0.031 (0.18)	R-35.0 (6.17)	0.029 (0.17)	R-36.1 (6.35)	0.029 (0.16)
R-35.7 (6.29)	R-58.1 (10.23)	R-39.5 (6.96)	0.025 (0.14)	R-42.0 (7.40)	0.024 (0.14)	R-43.4 (7.64)	0.023 (0.13)
R-42.0 (7.40)	R-64.4 (11.34)	R-44.1 (7.77)	0.023 (0.13)	R-47.0 (8.29)	0.021 (0.12)	R-48.7 (8.58)	0.021 (0.12)
R-48.3 (8.51)	R-70.7 (12.45)	R-48.7 (8.58)	0.021 (0.12)	R-52.1 (9.18)	0.019 (0.11)	R-54.0 (9.51)	0.019 (0.11)
R-54.6 (9.62)	R-77.0 (13.56)	R-53.3 (9.39)	0.019 (0.11)	R-57.2 (10.07)	0.017 (0.10)	R-59.4 (10.45)	0.017 (0.10)
R-60.9 (10.73)	R-83.3 (14.67)	R-57.9 (10.20)	0.017 (0.10)	R-62.2 (10.96)	0.016 (0.09)	R-64.7 (11.39)	0.016 (0.09)
R-67.2 (11.84)	R-89.6 (15.78)	R-62.5 (11.01)	0.016 (0.09)	R-67.3 (11.85)	0.015 (0.08)	R-70.0 (12.33)	0.014 (0.08)

32” Horizontal Console Spacing

Exterior Insulation 1D R-Value (RSI)	R_{1D} ft²·hr·°F / Btu (m² K / W)	24” Vertical Clip Spacing		36” Vertical Clip Spacing		48” Vertical Clip Spacing	
		R_o ft²·hr·°F / Btu (m² K / W)	U_o Btu/ft² ·hr ·°F (W/m² K)	R_o ft²·hr·°F / Btu (m² K / W)	U_o Btu/ft² ·hr ·°F (W/m² K)	R_o ft²·hr·°F / Btu (m² K / W)	U_o Btu/ft² ·hr ·°F (W/m² K)
R-8.4 (1.48)	R-30.8 (5.42)	R-19.4 (3.41)	0.052 (0.29)	R-19.8 (3.49)	0.051 (0.29)	R-20.0 (3.53)	0.050 (0.28)
R-12.6 (2.22)	R-35.0 (6.16)	R-22.9 (4.03)	0.044 (0.25)	R-23.5 (4.14)	0.043 (0.24)	R-23.9 (4.21)	0.042 (0.24)
R-14.7 (2.59)	R-37.1 (6.53)	R-24.7 (4.34)	0.041 (0.23)	R-25.4 (4.47)	0.039 (0.22)	R-25.8 (4.55)	0.039 (0.22)
R-21.0 (3.70)	R-43.4 (7.64)	R-30.1 (5.31)	0.033 (0.19)	R-31.1 (5.49)	0.032 (0.18)	R-31.7 (5.58)	0.032 (0.18)
R-27.3 (4.81)	R-49.7 (8.75)	R-35.6 (6.27)	0.029 (0.16)	R-36.9 (6.49)	0.028 (0.16)	R-37.6 (6.61)	0.027 (0.16)
R-35.7 (6.29)	R-58.1 (10.23)	R-42.9 (7.56)	0.023 (0.13)	R-44.5 (7.84)	0.022 (0.13)	R-45.4 (7.99)	0.022 (0.13)
R-42.0 (7.40)	R-64.4 (11.34)	R-48.3 (8.50)	0.021 (0.12)	R-50.1 (8.83)	0.020 (0.11)	R-51.1 (9.01)	0.020 (0.11)
R-48.3 (8.51)	R-70.7 (12.45)	R-53.6 (9.44)	0.019 (0.11)	R-55.8 (9.82)	0.018 (0.10)	R-56.9 (10.02)	0.018 (0.10)
R-54.6 (9.62)	R-77.0 (13.56)	R-58.9 (10.38)	0.017 (0.10)	R-61.4 (10.81)	0.016 (0.09)	R-62.7 (11.04)	0.016 (0.09)
R-60.9 (10.73)	R-83.3 (14.67)	R-64.2 (11.31)	0.016 (0.09)	R-67.0 (11.80)	0.015 (0.09)	R-68.5 (12.06)	0.015 (0.08)
R-67.2 (11.84)	R-89.6 (15.78)	R-69.6 (12.25)	0.014 (0.08)	R-72.6 (12.79)	0.014 (0.08)	R-74.2 (13.07)	0.013 (0.08)

Detail 5.1.101

Exterior Insulated 6” x 1 5/8” Steel Stud (24” o.c.) Wall Assembly with EJOT Crossfix Console and Horizontal Rail System Supporting Metal Cladding - Clear Wall

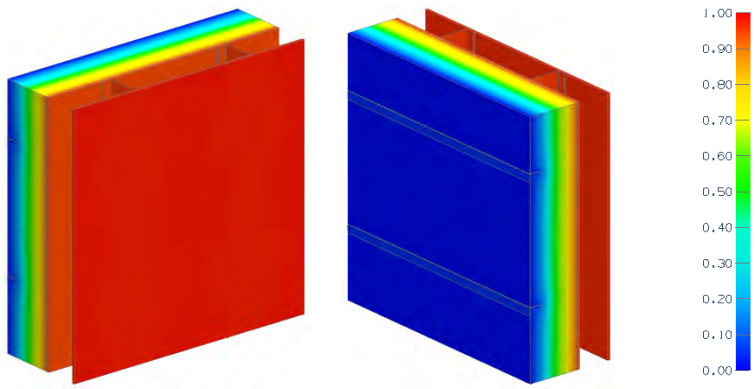

View from Interior View from Exterior

Thermal Performance Indicators

Assembly 1D (Nominal) R-Value	R_{1D}	R-3.30 (0.58 RSI) + exterior insulation
Transmittance / Resistance	U_o, R_o	“Clear wall” U- and R-value

Nominal (1D) vs. Assembly Performance Indicators

Exterior Insulation 1D R-Value (RSI)	R_{1D} ft²·hr·°F / Btu (m² K / W)	24” Vertical Clip Spacing		36” Vertical Clip Spacing		48” Vertical Clip Spacing	
		R_o ft²·hr·°F / Btu (m² K / W)	U_o Btu/ft² ·hr ·°F (W/m² K)	R_o ft²·hr·°F / Btu (m² K / W)	U_o Btu/ft² ·hr ·°F (W/m² K)	R_o ft²·hr·°F / Btu (m² K / W)	U_o Btu/ft² ·hr ·°F (W/m² K)
R-8.4 (1.48)	R-11.7 (2.06)	R-10.5 (1.86)	0.095 (0.54)	R-10.9 (1.92)	0.092 (0.52)	R-11.1 (1.95)	0.090 (0.51)
R-12.6 (2.22)	R-15.9 (2.80)	R-14.0 (2.46)	0.074 (0.42)	R-14.6 (2.57)	0.071 (0.40)	R-14.9 (2.62)	0.070 (0.40)
R-14.7 (2.59)	R-18.0 (3.17)	R-15.7 (2.77)	0.064 (0.36)	R-16.4 (2.89)	0.061 (0.35)	R-16.8 (2.96)	0.060 (0.34)
R-21.0 (3.70)	R-24.3 (4.28)	R-21.0 (3.70)	0.048 (0.27)	R-22.0 (3.88)	0.045 (0.26)	R-22.6 (3.97)	0.044 (0.25)
R-27.3 (4.81)	R-30.6 (5.39)	R-26.3 (4.63)	0.040 (0.23)	R-27.6 (4.86)	0.038 (0.22)	R-28.3 (4.98)	0.037 (0.21)
R-35.7 (6.29)	R-39.0 (6.87)	R-33.3 (5.87)	0.030 (0.17)	R-35.0 (6.17)	0.029 (0.16)	R-36.0 (6.33)	0.028 (0.16)
R-42.0 (7.40)	R-45.3 (7.98)	R-38.4 (6.77)	0.026 (0.15)	R-40.5 (7.13)	0.025 (0.14)	R-41.6 (7.32)	0.024 (0.14)
R-48.3 (8.51)	R-51.6 (9.08)	R-43.5 (7.66)	0.023 (0.13)	R-45.9 (8.08)	0.022 (0.13)	R-47.2 (8.31)	0.021 (0.12)
R-54.6 (9.62)	R-57.9 (10.19)	R-48.6 (8.56)	0.021 (0.12)	R-51.3 (9.04)	0.019 (0.11)	R-52.8 (9.30)	0.019 (0.11)
R-60.9 (10.73)	R-64.2 (11.30)	R-53.7 (9.45)	0.019 (0.11)	R-56.8 (10.00)	0.018 (0.10)	R-58.4 (10.29)	0.017 (0.10)
R-67.2 (11.84)	R-70.5 (12.41)	R-58.7 (10.34)	0.017 (0.10)	R-62.2 (10.95)	0.016 (0.09)	R-64.1 (11.28)	0.016 (0.09)

Detail 5.1.102

Exterior and Interior Insulated 6” x 1 5/8” Steel Stud (24” o.c.) Wall Assembly with EJOT Crossfix Console and Horizontal Rail System Supporting Metal Cladding and R-20 Batt Insulation in Stud Cavity - Clear Wall

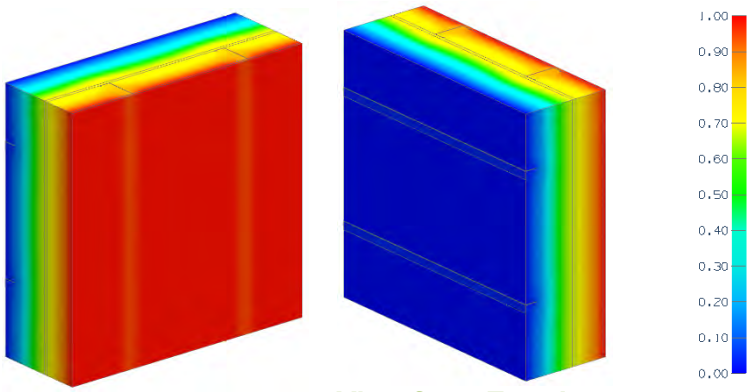

View from Interior

View from Exterior

Thermal Performance Indicators

Assembly 1D (Nominal) R-Value	R_{1D}	R-22.4 (3.94 RSI) + exterior insulation
Transmittance / Resistance	U_o, R_o	“Clear wall” U- and R-value

Nominal (1D) vs. Assembly Performance Indicators

Exterior Insulation 1D R-Value (RSI)	R_{1D} ft²·hr·°F / Btu (m² K / W)	24” Vertical Clip Spacing		36” Vertical Clip Spacing		48” Vertical Clip Spacing	
		R_o ft²·hr·°F / Btu (m² K / W)	U_o Btu/ft² ·hr ·°F (W/m² K)	R_o ft²·hr·°F / Btu (m² K / W)	U_o Btu/ft² ·hr ·°F (W/m² K)	R_o ft²·hr·°F / Btu (m² K / W)	U_o Btu/ft² ·hr ·°F (W/m² K)
R-8.4 (1.48)	R-30.8 (5.42)	R-21.3 (3.75)	0.047 (0.27)	R-21.9 (3.85)	0.046 (0.26)	R-22.2 (3.91)	0.045 (0.26)
R-12.6 (2.22)	R-35.0 (6.16)	R-24.7 (4.36)	0.041 (0.23)	R-25.6 (4.51)	0.040 (0.22)	R-26.0 (4.59)	0.039 (0.22)
R-14.7 (2.59)	R-37.1 (6.53)	R-26.5 (4.66)	0.038 (0.21)	R-27.5 (4.84)	0.036 (0.21)	R-28.0 (4.93)	0.036 (0.20)
R-21.0 (3.70)	R-43.4 (7.64)	R-31.7 (5.58)	0.032 (0.18)	R-33.0 (5.81)	0.030 (0.17)	R-33.7 (5.93)	0.030 (0.17)
R-27.3 (4.81)	R-49.7 (8.75)	R-36.9 (6.50)	0.028 (0.16)	R-38.5 (6.79)	0.027 (0.15)	R-39.4 (6.94)	0.026 (0.15)
R-35.7 (6.29)	R-58.1 (10.23)	R-43.9 (7.73)	0.023 (0.13)	R-45.9 (8.09)	0.022 (0.12)	R-47.0 (8.29)	0.021 (0.12)
R-42.0 (7.40)	R-64.4 (11.34)	R-48.9 (8.61)	0.020 (0.12)	R-51.3 (9.04)	0.019 (0.11)	R-52.6 (9.27)	0.019 (0.11)
R-48.3 (8.51)	R-70.7 (12.45)	R-53.9 (9.50)	0.019 (0.11)	R-56.7 (9.99)	0.018 (0.10)	R-58.3 (10.26)	0.017 (0.10)
R-54.6 (9.62)	R-77.0 (13.56)	R-59.0 (10.39)	0.017 (0.10)	R-62.2 (10.95)	0.016 (0.09)	R-63.9 (11.25)	0.016 (0.09)
R-60.9 (10.73)	R-83.3 (14.67)	R-64.1 (11.28)	0.016 (0.09)	R-67.6 (11.90)	0.015 (0.08)	R-69.5 (12.24)	0.014 (0.08)
R-67.2 (11.84)	R-89.6 (15.78)	R-69.1 (12.17)	0.014 (0.08)	R-73.0 (12.85)	0.014 (0.08)	R-75.1 (13.22)	0.013 (0.08)

Detail 5.1.103

Exterior Insulated 6” x 1 5/8” Steel Stud (16” o.c.) Wall Assembly with EJOT Crossfix Console and Vertical Rail System Supporting Metal Cladding - Clear Wall

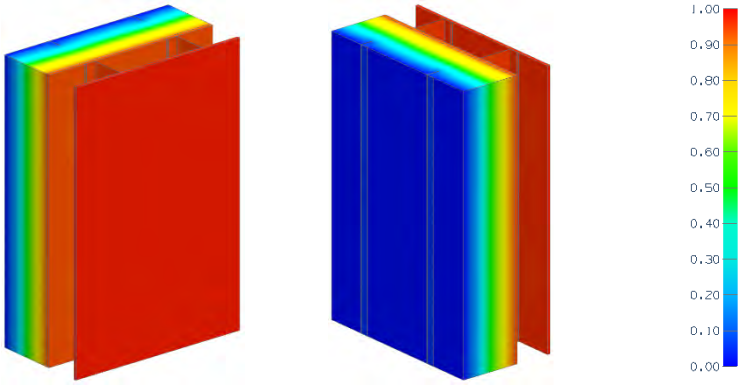

View from Interior View from Exterior

Thermal Performance Indicators

Assembly 1D (Nominal) R-Value	R_{1D}	R-3.30 (0.58 RSI) + exterior insulation
Transmittance / Resistance	U_o, R_o	“Clear wall” U- and R-value

Nominal (1D) vs. Assembly Performance Indicators

16” Horizontal Console Spacing

Exterior Insulation 1D R-Value (RSI)	R_{1D} ft²·hr·°F / Btu (m² K / W)	24” Vertical Clip Spacing		36” Vertical Clip Spacing		48” Vertical Clip Spacing	
		R_o ft²·hr·°F / Btu (m² K / W)	U_o Btu/ft² ·hr ·°F (W/m² K)	R_o ft²·hr·°F / Btu (m² K / W)	U_o Btu/ft² ·hr ·°F (W/m² K)	R_o ft²·hr·°F / Btu (m² K / W)	U_o Btu/ft² ·hr ·°F (W/m² K)
R-8.4 (1.48)	R-11.7 (2.06)	R-10.0 (1.77)	0.100 (0.57)	R-10.3 (1.82)	0.097 (0.55)	R-10.5 (1.84)	0.096 (0.54)
R-12.6 (2.22)	R-15.9 (2.80)	R-12.9 (2.27)	0.080 (0.45)	R-13.4 (2.36)	0.077 (0.44)	R-13.6 (2.40)	0.076 (0.43)
R-14.7 (2.59)	R-18.0 (3.17)	R-14.3 (2.52)	0.070 (0.40)	R-14.9 (2.62)	0.067 (0.38)	R-15.2 (2.68)	0.066 (0.37)
R-21.0 (3.70)	R-24.3 (4.28)	R-19.1 (3.37)	0.052 (0.30)	R-20.1 (3.55)	0.050 (0.28)	R-20.7 (3.64)	0.048 (0.27)
R-27.3 (4.81)	R-30.6 (5.39)	R-23.8 (4.20)	0.044 (0.25)	R-25.3 (4.45)	0.042 (0.24)	R-26.1 (4.60)	0.040 (0.23)
R-35.7 (6.29)	R-39.0 (6.87)	R-30.2 (5.31)	0.033 (0.19)	R-32.2 (5.67)	0.031 (0.18)	R-33.3 (5.87)	0.030 (0.17)
R-42.0 (7.40)	R-45.3 (7.98)	R-34.7 (6.11)	0.029 (0.16)	R-37.2 (6.55)	0.027 (0.15)	R-38.6 (6.80)	0.026 (0.15)
R-48.3 (8.51)	R-51.6 (9.08)	R-39.4 (6.93)	0.026 (0.15)	R-42.3 (7.45)	0.024 (0.14)	R-44.0 (7.74)	0.023 (0.13)
R-54.6 (9.62)	R-57.9 (10.19)	R-44.0 (7.75)	0.023 (0.13)	R-47.4 (8.34)	0.021 (0.12)	R-49.3 (8.68)	0.020 (0.12)
R-60.9 (10.73)	R-64.2 (11.30)	R-48.6 (8.56)	0.021 (0.12)	R-52.4 (9.24)	0.019 (0.11)	R-54.6 (9.62)	0.018 (0.10)
R-67.2 (11.84)	R-70.5 (12.41)	R-53.2 (9.38)	0.019 (0.11)	R-57.5 (10.13)	0.017 (0.10)	R-60.0 (10.56)	0.017 (0.09)

32” Horizontal Console Spacing

Exterior Insulation 1D R-Value (RSI)	R_{1D} ft²·hr·°F / Btu (m² K / W)	24” Vertical Clip Spacing		36” Vertical Clip Spacing		48” Vertical Clip Spacing	
		R_o ft²·hr·°F / Btu (m² K / W)	U_o Btu/ft² ·hr ·°F (W/m² K)	R_o ft²·hr·°F / Btu (m² K / W)	U_o Btu/ft² ·hr ·°F (W/m² K)	R_o ft²·hr·°F / Btu (m² K / W)	U_o Btu/ft² ·hr ·°F (W/m² K)
R-8.4 (1.48)	R-11.7 (2.06)	R-10.8 (1.90)	0.093 (0.53)	R-11.0 (1.93)	0.091 (0.52)	R-11.0 (1.94)	0.091 (0.51)
R-12.6 (2.22)	R-15.9 (2.80)	R-14.2 (2.51)	0.073 (0.41)	R-14.5 (2.56)	0.071 (0.40)	R-14.7 (2.58)	0.071 (0.40)
R-14.7 (2.59)	R-18.0 (3.17)	R-15.9 (2.81)	0.063 (0.36)	R-16.3 (2.87)	0.061 (0.35)	R-16.5 (2.90)	0.061 (0.34)
R-21.0 (3.70)	R-24.3 (4.28)	R-21.4 (3.77)	0.047 (0.27)	R-22.0 (3.88)	0.045 (0.26)	R-22.4 (3.94)	0.045 (0.25)
R-27.3 (4.81)	R-30.6 (5.39)	R-26.8 (4.72)	0.039 (0.22)	R-27.7 (4.88)	0.038 (0.22)	R-28.2 (4.96)	0.037 (0.21)
R-35.7 (6.29)	R-39.0 (6.87)	R-34.0 (5.99)	0.029 (0.17)	R-35.3 (6.21)	0.028 (0.16)	R-35.9 (6.33)	0.028 (0.16)
R-42.0 (7.40)	R-45.3 (7.98)	R-39.3 (6.92)	0.025 (0.14)	R-40.9 (7.19)	0.024 (0.14)	R-41.7 (7.34)	0.024 (0.14)
R-48.3 (8.51)	R-51.6 (9.08)	R-44.6 (7.86)	0.023 (0.13)	R-46.5 (8.19)	0.022 (0.12)	R-47.5 (8.36)	0.021 (0.12)
R-54.6 (9.62)	R-57.9 (10.19)	R-50.0 (8.80)	0.020 (0.11)	R-52.1 (9.18)	0.019 (0.11)	R-53.3 (9.38)	0.019 (0.11)
R-60.9 (10.73)	R-64.2 (11.30)	R-55.3 (9.74)	0.018 (0.10)	R-57.7 (10.17)	0.017 (0.10)	R-59.0 (10.39)	0.017 (0.10)
R-67.2 (11.84)	R-70.5 (12.41)	R-60.6 (10.68)	0.016 (0.09)	R-63.3 (11.16)	0.016 (0.09)	R-64.8 (11.41)	0.015 (0.09)

Detail 5.1.104

Exterior and Interior Insulated 6” x 1 5/8” Steel Stud (16” o.c.) Wall Assembly with EJOT Crossfix Console and Vertical Rail System Supporting Metal Cladding and R-20 Batt Insulation in Stud Cavity - Clear Wall

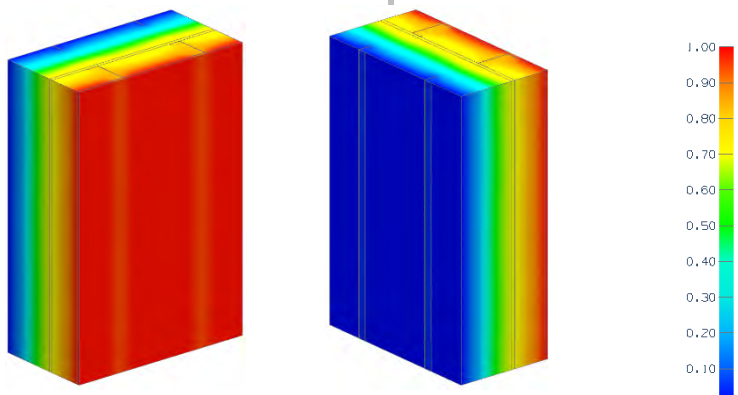

View from Interior View from Exterior

Thermal Performance Indicators

Assembly 1D (Nominal) R-Value	R_{1D}	R-22.4 (3.94 RSI) + exterior insulation
Transmittance / Resistance	U_o, R_o	“Clear wall” U- and R-value

Nominal (1D) vs. Assembly Performance Indicators

16” Horizontal Console Spacing

Exterior Insulation 1D R-Value (RSI)	R_{1D} ft²·hr·°F / Btu (m² K / W)	24” Vertical Clip Spacing		36” Vertical Clip Spacing		48” Vertical Clip Spacing	
		R_o ft²·hr·°F / Btu (m² K / W)	U_o Btu/ft² ·hr ·°F (W/m² K)	R_o ft²·hr·°F / Btu (m² K / W)	U_o Btu/ft² ·hr ·°F (W/m² K)	R_o ft²·hr·°F / Btu (m² K / W)	U_o Btu/ft² ·hr ·°F (W/m² K)
R-8.4 (1.48)	R-30.8 (5.42)	R-18.0 (3.17)	0.056 (0.32)	R-18.5 (3.25)	0.054 (0.31)	R-18.7 (3.30)	0.053 (0.30)
R-12.6 (2.22)	R-35.0 (6.16)	R-20.8 (3.66)	0.049 (0.28)	R-21.5 (3.78)	0.047 (0.27)	R-21.8 (3.85)	0.046 (0.26)
R-14.7 (2.59)	R-37.1 (6.53)	R-22.2 (3.90)	0.045 (0.26)	R-23.0 (4.05)	0.044 (0.25)	R-23.4 (4.12)	0.043 (0.24)
R-21.0 (3.70)	R-43.4 (7.64)	R-27.0 (4.76)	0.037 (0.21)	R-28.3 (4.98)	0.035 (0.20)	R-29.0 (5.11)	0.034 (0.20)
R-27.3 (4.81)	R-49.7 (8.75)	R-31.7 (5.59)	0.032 (0.18)	R-33.5 (5.90)	0.031 (0.17)	R-34.5 (6.08)	0.030 (0.17)
R-35.7 (6.29)	R-58.1 (10.23)	R-38.1 (6.70)	0.026 (0.15)	R-40.4 (7.12)	0.025 (0.14)	R-41.8 (7.36)	0.024 (0.14)
R-42.0 (7.40)	R-64.4 (11.34)	R-42.6 (7.51)	0.023 (0.13)	R-45.5 (8.01)	0.022 (0.12)	R-47.1 (8.29)	0.021 (0.12)
R-48.3 (8.51)	R-70.7 (12.45)	R-47.3 (8.32)	0.021 (0.12)	R-50.6 (8.90)	0.020 (0.11)	R-52.4 (9.23)	0.019 (0.11)
R-54.6 (9.62)	R-77.0 (13.56)	R-51.9 (9.14)	0.019 (0.11)	R-55.6 (9.80)	0.018 (0.10)	R-57.8 (10.17)	0.017 (0.10)
R-60.9 (10.73)	R-83.3 (14.67)	R-56.5 (9.96)	0.018 (0.10)	R-60.7 (10.69)	0.017 (0.09)	R-63.1 (11.11)	0.016 (0.09)
R-67.2 (11.84)	R-89.6 (15.78)	R-61.2 (10.77)	0.016 (0.09)	R-65.8 (11.59)	0.015 (0.09)	R-68.5 (12.06)	0.015 (0.08)

32” Horizontal Console Spacing

Exterior Insulation 1D R-Value (RSI)	R_{1D} ft²·hr·°F / Btu (m² K / W)	24” Vertical Clip Spacing		36” Vertical Clip Spacing		48” Vertical Clip Spacing	
		R_o ft²·hr·°F / Btu (m² K / W)	U_o Btu/ft² ·hr ·°F (W/m² K)	R_o ft²·hr·°F / Btu (m² K / W)	U_o Btu/ft² ·hr ·°F (W/m² K)	R_o ft²·hr·°F / Btu (m² K / W)	U_o Btu/ft² ·hr ·°F (W/m² K)
R-8.4 (1.48)	R-30.8 (5.42)	R-19.3 (3.39)	0.052 (0.29)	R-19.5 (3.44)	0.051 (0.29)	R-19.7 (3.47)	0.051 (0.29)
R-12.6 (2.22)	R-35.0 (6.16)	R-22.7 (4.00)	0.045 (0.25)	R-23.1 (4.07)	0.044 (0.25)	R-23.3 (4.11)	0.043 (0.25)
R-14.7 (2.59)	R-37.1 (6.53)	R-24.4 (4.30)	0.041 (0.23)	R-24.9 (4.38)	0.040 (0.23)	R-25.1 (4.43)	0.040 (0.23)
R-21.0 (3.70)	R-43.4 (7.64)	R-29.9 (5.26)	0.033 (0.19)	R-30.7 (5.40)	0.033 (0.19)	R-31.1 (5.47)	0.032 (0.18)
R-27.3 (4.81)	R-49.7 (8.75)	R-35.3 (6.21)	0.029 (0.17)	R-36.4 (6.40)	0.028 (0.16)	R-36.9 (6.50)	0.028 (0.16)
R-35.7 (6.29)	R-58.1 (10.23)	R-42.5 (7.49)	0.024 (0.13)	R-43.9 (7.74)	0.023 (0.13)	R-44.7 (7.88)	0.022 (0.13)
R-42.0 (7.40)	R-64.4 (11.34)	R-47.8 (8.42)	0.021 (0.12)	R-49.5 (8.73)	0.020 (0.11)	R-50.5 (8.89)	0.020 (0.11)
R-48.3 (8.51)	R-70.7 (12.45)	R-53.1 (9.36)	0.019 (0.11)	R-55.2 (9.72)	0.018 (0.10)	R-56.3 (9.91)	0.018 (0.10)
R-54.6 (9.62)	R-77.0 (13.56)	R-58.5 (10.30)	0.017 (0.10)	R-60.8 (10.71)	0.016 (0.09)	R-62.1 (10.93)	0.016 (0.09)
R-60.9 (10.73)	R-83.3 (14.67)	R-63.8 (11.24)	0.016 (0.09)	R-66.4 (11.70)	0.015 (0.09)	R-67.8 (11.95)	0.015 (0.08)
R-67.2 (11.84)	R-89.6 (15.78)	R-69.2 (12.18)	0.014 (0.08)	R-72.0 (12.69)	0.014 (0.08)	R-73.6 (12.96)	0.014 (0.08)

Detail 5.1.105

Exterior Insulated 6” x 1 5/8” Steel Stud (24” o.c.) Wall Assembly with EJOT Crossfix Console and Vertical Rail System Supporting Metal Cladding - Clear Wall

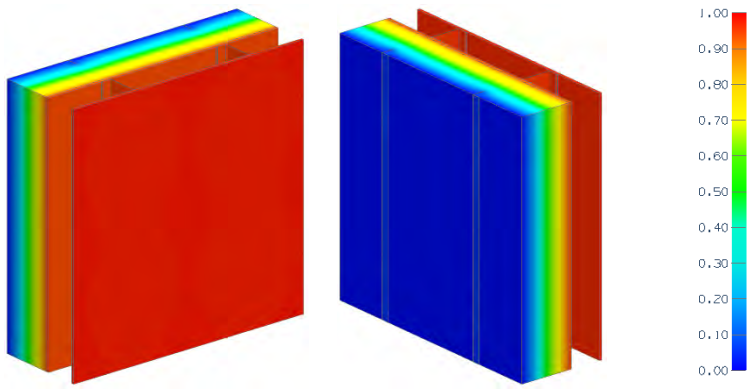

View from Interior View from Exterior

Thermal Performance Indicators

Assembly 1D (Nominal) R-Value	R_{1D}	R-3.30 (0.58 RSI) + exterior insulation
Transmittance / Resistance	U_o, R_o	“Clear wall” U- and R-value

Nominal (1D) vs. Assembly Performance Indicators

Exterior Insulation 1D R-Value (RSI)	R_{1D} ft²·hr·°F / Btu (m² K / W)	24” Vertical Clip Spacing		36” Vertical Clip Spacing		48” Vertical Clip Spacing	
		R_o ft²·hr·°F / Btu (m² K / W)	U_o Btu/ft² ·hr ·°F (W/m² K)	R_o ft²·hr·°F / Btu (m² K / W)	U_o Btu/ft² ·hr ·°F (W/m² K)	R_o ft²·hr·°F / Btu (m² K / W)	U_o Btu/ft² ·hr ·°F (W/m² K)
R-8.4 (1.48)	R-11.7 (2.06)	R-10.5 (1.86)	0.095 (0.54)	R-10.7 (1.89)	0.093 (0.53)	R-10.9 (1.91)	0.092 (0.52)
R-12.6 (2.22)	R-15.9 (2.80)	R-13.8 (2.42)	0.075 (0.43)	R-14.1 (2.49)	0.073 (0.42)	R-14.3 (2.52)	0.072 (0.41)
R-14.7 (2.59)	R-18.0 (3.17)	R-15.4 (2.71)	0.065 (0.37)	R-15.8 (2.79)	0.063 (0.36)	R-16.1 (2.83)	0.062 (0.35)
R-21.0 (3.70)	R-24.3 (4.28)	R-20.6 (3.62)	0.049 (0.28)	R-21.4 (3.76)	0.047 (0.27)	R-21.8 (3.84)	0.046 (0.26)
R-27.3 (4.81)	R-30.6 (5.39)	R-25.7 (4.53)	0.041 (0.23)	R-26.9 (4.73)	0.039 (0.22)	R-27.5 (4.84)	0.038 (0.22)
R-35.7 (6.29)	R-39.0 (6.87)	R-32.6 (5.75)	0.031 (0.17)	R-34.2 (6.02)	0.029 (0.17)	R-35.0 (6.17)	0.029 (0.16)
R-42.0 (7.40)	R-45.3 (7.98)	R-37.6 (6.63)	0.027 (0.15)	R-39.6 (6.97)	0.025 (0.14)	R-40.6 (7.15)	0.025 (0.14)
R-48.3 (8.51)	R-51.6 (9.08)	R-42.7 (7.52)	0.024 (0.13)	R-45.0 (7.93)	0.023 (0.13)	R-46.3 (8.15)	0.022 (0.12)
R-54.6 (9.62)	R-57.9 (10.19)	R-47.8 (8.42)	0.021 (0.12)	R-50.4 (8.88)	0.020 (0.11)	R-51.9 (9.14)	0.019 (0.11)
R-60.9 (10.73)	R-64.2 (11.30)	R-52.9 (9.31)	0.019 (0.11)	R-55.9 (9.84)	0.018 (0.10)	R-57.5 (10.13)	0.018 (0.10)
R-67.2 (11.84)	R-70.5 (12.41)	R-58.0 (10.21)	0.017 (0.10)	R-61.3 (10.79)	0.016 (0.09)	R-63.1 (11.12)	0.016 (0.09)

Detail 5.1.106

Exterior and Interior Insulated 6” x 1 5/8” Steel Stud (24” o.c.) Wall Assembly with EJOT Crossfix Console and Vertical Rail System Supporting Metal Cladding and R-20 Batt Insulation in Stud Cavity - Clear Wall

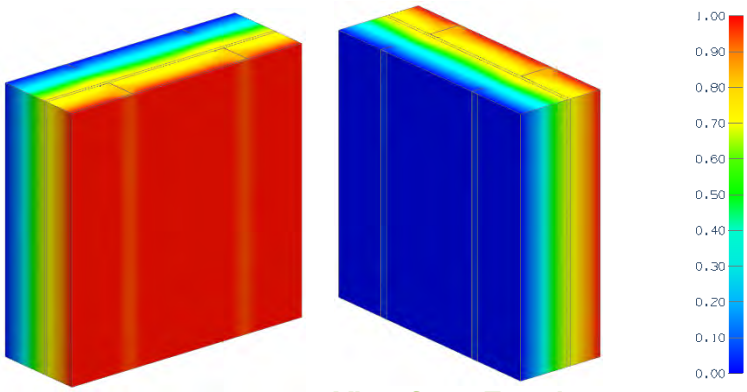

View from Interior View from Exterior

Thermal Performance Indicators

Assembly 1D (Nominal) R-Value	R_{1D}	R-22.4 (3.94 RSI) + exterior insulation
Transmittance / Resistance	U_o, R_o	“Clear wall” U- and R-value

Nominal (1D) vs. Assembly Performance Indicators

Exterior Insulation 1D R-Value (RSI)	R_{1D} ft²·hr·°F / Btu (m² K / W)	24” Vertical Clip Spacing		36” Vertical Clip Spacing		48” Vertical Clip Spacing	
		R_o ft²·hr·°F / Btu (m² K / W)	U_o Btu/ft² ·hr ·°F (W/m² K)	R_o ft²·hr·°F / Btu (m² K / W)	U_o Btu/ft² ·hr ·°F (W/m² K)	R_o ft²·hr·°F / Btu (m² K / W)	U_o Btu/ft² ·hr ·°F (W/m² K)
R-8.4 (1.48)	R-30.8 (5.42)	R-20.9 (3.68)	0.048 (0.27)	R-21.3 (3.75)	0.047 (0.27)	R-21.5 (3.79)	0.046 (0.26)
R-12.6 (2.22)	R-35.0 (6.16)	R-24.0 (4.23)	0.042 (0.24)	R-24.6 (4.34)	0.041 (0.23)	R-25.0 (4.40)	0.040 (0.23)
R-14.7 (2.59)	R-37.1 (6.53)	R-25.6 (4.50)	0.039 (0.22)	R-26.3 (4.63)	0.038 (0.22)	R-26.7 (4.70)	0.037 (0.21)
R-21.0 (3.70)	R-43.4 (7.64)	R-30.9 (5.43)	0.032 (0.18)	R-32.0 (5.63)	0.031 (0.18)	R-32.6 (5.74)	0.031 (0.17)
R-27.3 (4.81)	R-49.7 (8.75)	R-36.0 (6.35)	0.028 (0.16)	R-37.5 (6.61)	0.027 (0.16)	R-38.3 (6.75)	0.027 (0.15)
R-35.7 (6.29)	R-58.1 (10.23)	R-43.0 (7.56)	0.023 (0.13)	R-44.9 (7.91)	0.022 (0.13)	R-46.0 (8.10)	0.022 (0.12)
R-42.0 (7.40)	R-64.4 (11.34)	R-48.0 (8.45)	0.021 (0.12)	R-50.3 (8.86)	0.020 (0.11)	R-51.6 (9.08)	0.019 (0.11)
R-48.3 (8.51)	R-70.7 (12.45)	R-53.1 (9.34)	0.019 (0.11)	R-55.8 (9.82)	0.018 (0.10)	R-57.2 (10.08)	0.018 (0.10)
R-54.6 (9.62)	R-77.0 (13.56)	R-58.1 (10.24)	0.017 (0.10)	R-61.2 (10.78)	0.016 (0.09)	R-62.8 (11.07)	0.016 (0.09)
R-60.9 (10.73)	R-83.3 (14.67)	R-63.2 (11.13)	0.016 (0.09)	R-66.6 (11.73)	0.015 (0.09)	R-68.5 (12.06)	0.015 (0.08)
R-67.2 (11.84)	R-89.6 (15.78)	R-68.3 (12.03)	0.015 (0.08)	R-72.1 (12.69)	0.014 (0.08)	R-74.1 (13.05)	0.013 (0.08)

Detail 5.1.107

Exterior Insulated 6” x 1 /58” Steel Stud (16” o.c.) Wall Assembly with Horizontal Z-Girts (24” o.c.) Supporting Cladding and Owens Corning ThermaFiber RainBarrier HC Max Insulation – Clear Wall

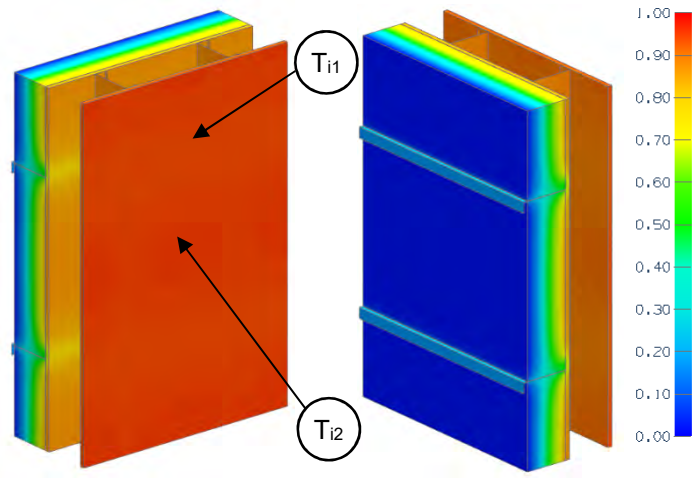

View from Interior View from Exterior

Thermal Performance Indicators

Assembly 1D (Nominal) R-Value	R_{1D}	R-3.4 (0.60 RSI) + exterior insulation
Transmittance / Resistance	U_o, R_o	“clear wall” U- and R-value
Surface Temperature Index	T_i	0 = exterior temperature 1 = interior temperature

Nominal (1D) vs. Assembly Performance Indicators

Exterior Insulation 1D R-Value (RSI)	R_{1D} ft²·hr·ºF / Btu (m² K / W)	R_o ft²·hr·ºF / Btu (m² K / W)	U_o Btu/ft² ·hr ·ºF (W/m² K)
R-4.0 (0.70)	R-7.4 (1.30)	R-6.5 (1.15)	0.153 (0.87)
R-8.0 (1.41)	R-11.4 (2.01)	R-8.6 (1.52)	0.116 (0.66)
R-12.0 (2.11)	R-15.4 (2.71)	R-10.7 (1.89)	0.093 (0.53)
R-16.0 (2.82)	R-19.4 (3.42)	R-12.2 (2.15)	0.082 (0.46)
R-20.0 (3.52)	R-23.4 (4.12)	R-13.7 (2.42)	0.073 (0.41)
R-24.0 (4.23)	R-27.4 (4.82)	R-15.0 (2.64)	0.067 (0.38)

Temperature Indices

	R4	R12	R20	R24	
T_{i1}	0.62	0.73	0.77	0.79	Min T on sheathing, along girts between studs
T_{i2}	0.69	0.83	0.87	0.88	Max T on sheathing, between studs and girt

Temperature indices listed for selected scenarios. All other scenarios to be interpolated.

Detail 5.1.108

Exterior Insulated 6” x 1 5/8” Steel Stud (16” o.c.) Wall Assembly with High Compression Insulation and Through Insulation Steel Fasteners (12” o.c.) Supporting Cladding, Owens Corning ThermaFiber RainBarrier HC Max Insulation – Clear Wall

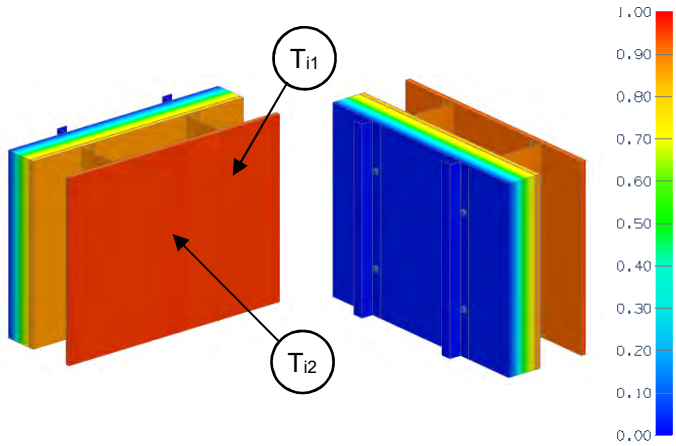

View from Interior View from Exterior

Thermal Performance Indicators

Assembly 1D (Nominal) R-Value	R_{1D}	R-3.4 (0.60 RSI) + exterior insulation
Transmittance / Resistance	U_o, R_o	“clear wall” U- and R-value
Surface Temperature Index	T_i	0 = exterior temperature 1 = interior temperature

Nominal (1D) vs. Assembly Performance Indicators

Exterior Insulation 1D R-Value (RSI)	R_{1D} ft²·hr·°F / Btu (m² K / W)	R_o ft²·hr·°F / Btu (m² K / W)	U_o Btu/ft² ·hr ·°F (W/m² K)
R-4.0 (0.70)	R-7.4 (1.30)	R-7.0 (1.24)	0.142 (0.81)
R-8.0 (1.41)	R-11.4 (2.01)	R-10.2 (1.79)	0.098 (0.56)
R-12.0 (2.11)	R-15.4 (2.71)	R-13.3 (2.35)	0.075 (0.43)
R-16.0 (2.82)	R-19.4 (3.42)	R-16.3 (2.87)	0.061 (0.35)

Temperature Indices

	R4	R12	R16	
T_{i1}	0.37	0.54	0.59	Min T on sheathing, at fastener along studs
T_{i2}	0.69	0.85	0.88	Min T on sheathing, between studs and fasteners

Temperature indices listed for selected scenarios. All other scenarios to be interpolated.

Detail 5.1.109

Exterior Insulated 6” x 1 5/8” Steel Stud (16” o.c.) Wall Assembly with High Compression Insulation and Through Insulation Steel Fasteners (12” o.c.) Supporting Cladding, Owens Corning ThermaFiber RainBarrier Ci HC 80/45 Insulation – Clear Wall

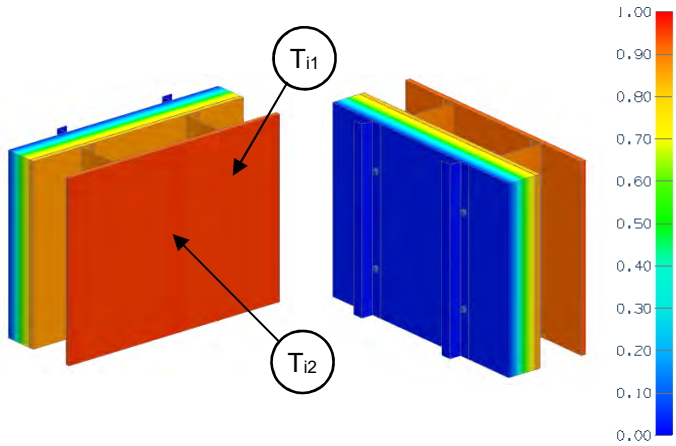

View from Interior View from Exterior

Thermal Performance Indicators

Assembly 1D (Nominal) R-Value	R_{1D}	R-3.4 (0.60 RSI) + exterior insulation
Transmittance / Resistance	U_o, R_o	“clear wall” U- and R-value
Surface Temperature Index	T_i	0 = exterior temperature 1 = interior temperature

Nominal (1D) vs. Assembly Performance Indicators

Exterior Insulation 1D R-Value (RSI)	R_{1D} ft²·hr·°F / Btu (m² K / W)	R_o ft²·hr·°F / Btu (m² K / W)	U_o Btu/ft² ·hr ·°F (W/m² K)
R-4.2 (0.74)	R-7.6 (1.34)	R-7.2 (1.27)	0.139 (0.79)
R-8.4 (1.48)	R-11.8 (2.08)	R-10.5 (1.85)	0.095 (0.54)
R-12.6 (2.22)	R-16.0 (2.82)	R-13.8 (2.42)	0.073 (0.41)
R-16.8 (2.96)	R-20.2 (3.56)	R-16.8 (2.96)	0.059 (0.34)

Temperature Indices

	R4	R12	R16	
T_{i1}	0.38	0.54	0.59	Min T on sheathing, at fastener along studs
T_{i2}	0.70	0.85	0.88	Min T on sheathing, between studs and fasteners

Temperature indices listed for selected scenarios. All other scenarios to be interpolated.

Detail 5.1.110

Exterior Insulated 6” x 1 5/8” Steel Stud (16” o.c.) Wall Assembly with High Compression Insulation and Through Insulation Stainless Steel Fasteners (12” o.c.) Supporting Cladding, Owens Corning ThermaFiber RainBarrier HC Max Insulation – Clear Wall

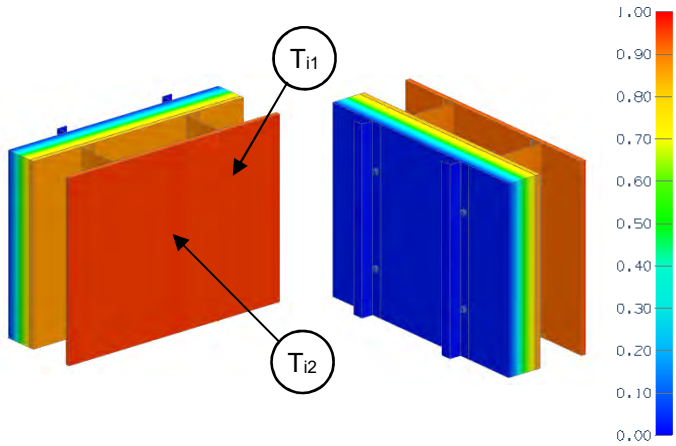

View from Interior View from Exterior

Thermal Performance Indicators

Assembly 1D (Nominal) R-Value	R_{1D}	R-3.4 (0.60 RSI) + exterior insulation
Transmittance / Resistance	U_o, R_o	“clear wall” U- and R-value
Surface Temperature Index	T_i	0 = exterior temperature 1 = interior temperature

Nominal (1D) vs. Assembly Performance Indicators

Exterior Insulation 1D R-Value (RSI)	R_{1D} ft²·hr·°F / Btu (m² K / W)	R_o ft²·hr·°F / Btu (m² K / W)	U_o Btu/ft² ·hr ·°F (W/m² K)
R-4.0 (0.70)	R-7.4 (1.30)	R-7.2 (1.27)	0.139 (0.79)
R-8.0 (1.41)	R-11.4 (2.01)	R-10.7 (1.89)	0.093 (0.53)
R-12.0 (2.11)	R-15.4 (2.71)	R-14.3 (2.52)	0.070 (0.40)
R-16.0 (2.82)	R-19.4 (3.42)	R-17.8 (3.14)	0.056 (0.32)

Temperature Indices

	R4	R12	R16	
T_{i1}	0.51	0.71	0.76	Min T on sheathing, at fastener along studs
T_{i2}	0.70	0.85	0.88	Min T on sheathing, between studs and fasteners

Temperature indices listed for selected scenarios. All other scenarios to be interpolated.

Detail 5.1.111

Exterior Insulated 6” x 1 5/8” Steel Stud (16” o.c.) Wall Assembly with High Compression Insulation and Through Insulation Stainless Steel Fasteners (12” o.c.) Supporting Cladding, Owens Corning ThermaFiber RainBarrier Ci HC 80/45 Insulation – Clear Wall

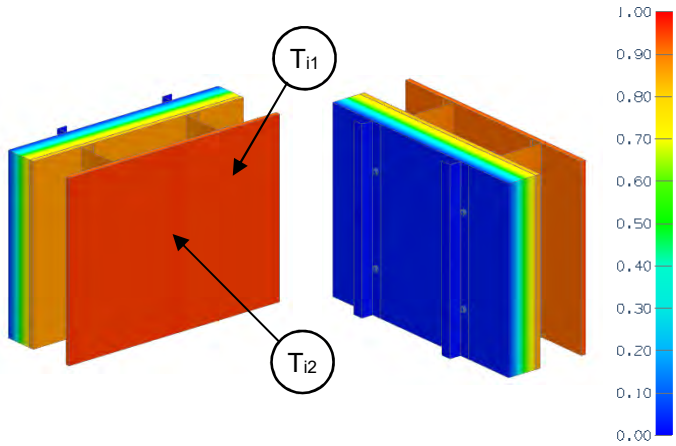

View from Interior View from Exterior

Thermal Performance Indicators

Assembly 1D (Nominal) R-Value	R_{1D}	R-3.4 (0.60 RSI) + exterior insulation
Transmittance / Resistance	U_o, R_o	“clear wall” U- and R-value
Surface Temperature Index	T_i	0 = exterior temperature 1 = interior temperature

Nominal (1D) vs. Assembly Performance Indicators

Exterior Insulation 1D R-Value (RSI)	R_{1D} ft²·hr·°F / Btu (m² K / W)	R_o ft²·hr·°F / Btu (m² K / W)	U_o Btu/ft² ·hr ·°F (W/m² K)
R-4.2 (0.74)	R-7.6 (1.34)	R-7.4 (1.30)	0.136 (0.77)
R-8.4 (1.48)	R-11.8 (2.08)	R-11.1 (1.95)	0.090 (0.51)
R-12.6 (2.22)	R-16.0 (2.82)	R-14.8 (2.61)	0.068 (0.38)
R-16.8 (2.96)	R-20.2 (3.56)	R-18.5 (3.26)	0.054 (0.31)

Temperature Indices

	R4	R12	R16	
T_{i1}	0.51	0.72	0.76	Min T on sheathing, at fastener along studs
T_{i2}	0.70	0.86	0.89	Min T on sheathing, between studs and fasteners

Temperature indices listed for selected scenarios. All other scenarios to be interpolated.

Detail 5.1.112

Exterior and Interior Insulated 6" x 1 5/8" Steel Stud (16" o.c.) Wall Assembly with High Compression Insulation and Through Insulation Stainless Steel Fasteners (16" o.c.) Supporting Cladding, Owens Corning ThermaFiber RainBarrier HC Max Insulation and R-20 Batt Insulation in Stud Cavity – Clear Wall

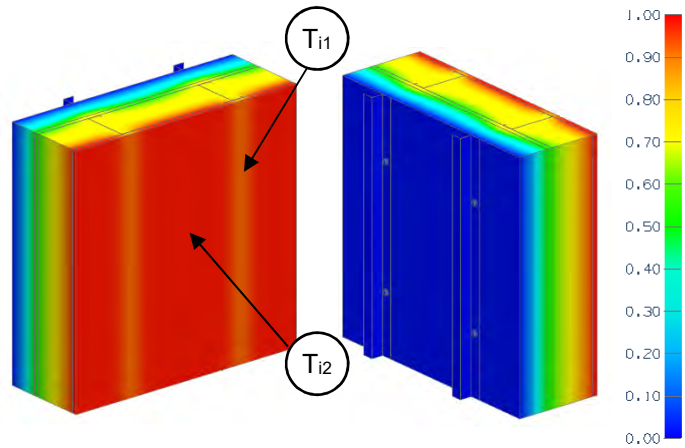

View from Interior View from Exterior

Thermal Performance Indicators

Assembly 1D (Nominal) R-Value	R_{1D}	R-22.5 (3.96 RSI) + exterior insulation
Transmittance / Resistance	U_o, R_o	"clear wall" U- and R-value
Surface Temperature Index	T_i	0 = exterior temperature 1 = interior temperature

Nominal (1D) vs. Assembly Performance Indicators

Exterior Insulation 1D R-Value (RSI)	R_{1D} ft²·hr·°F / Btu (m² K / W)	R_o ft²·hr·°F / Btu (m² K / W)	U_o Btu/ft² ·hr ·°F (W/m² K)
R-4.0 (0.70)	R-26.5 (4.67)	R-16.0 (2.82)	0.062 (0.35)
R-8.0 (1.41)	R-30.5 (5.37)	R-19.7 (3.48)	0.051 (0.29)
R-12.0 (2.11)	R-34.5 (6.08)	R-23.4 (4.13)	0.043 (0.24)
R-16.0 (2.82)	R-38.5 (6.78)	R-27.1 (4.77)	0.037 (0.21)

Temperature Indices

	R4.2	R12.6	R16.8	
T_{i1}	0.39	0.56	0.62	Min T on sheathing, at fastener along studs
T_{i2}	0.23	0.46	0.53	Min T on sheathing, between studs and fasteners

Temperature indices listed for selected scenarios. All other scenarios to be interpolated.

Detail 5.1.113

Exterior and Interior Insulated 6” x 1 5/8” Steel Stud (16” o.c.) Wall Assembly with High Compression Insulation and Through Insulation Stainless Steel Fasteners (16” o.c.) Supporting Cladding, Owens Corning ThermaFiber RainBarrier Ci HC 80/45 Insulation and R-20 Batt Insulation in Stud Cavity – Clear Wall

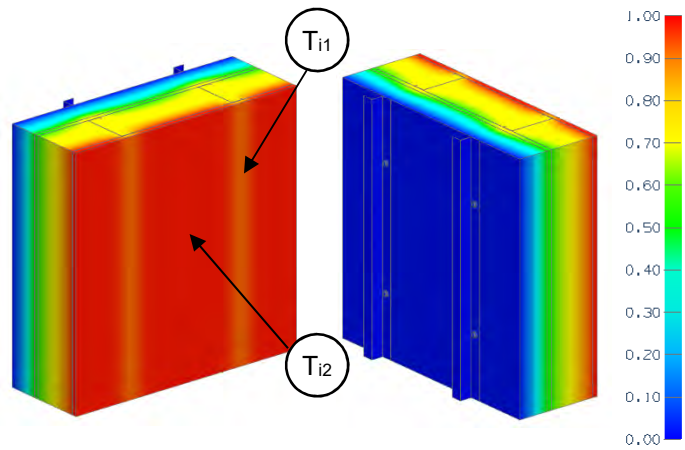

View from Interior View from Exterior

Thermal Performance Indicators

Assembly 1D (Nominal) R-Value	R_{1D}	R-22.5 (3.96 RSI) + exterior insulation
Transmittance / Resistance	U_o, R_o	“clear wall” U- and R-value
Surface Temperature Index	T_i	0 = exterior temperature 1 = interior temperature

Nominal (1D) vs. Assembly Performance Indicators

Exterior Insulation 1D R-Value (RSI)	R_{1D} ft²·hr·°F / Btu (m² K / W)	R_o ft²·hr·°F / Btu (m² K / W)	U_o Btu/ft² ·hr ·°F (W/m² K)
R-4.2 (0.74)	R-26.7 (4.70)	R-16.2 (2.85)	0.062 (0.35)
R-8.4 (1.48)	R-30.9 (5.44)	R-20.1 (3.54)	0.050 (0.28)
R-12.6 (2.22)	R-35.1 (6.18)	R-24.0 (4.22)	0.042 (0.24)
R-16.8 (2.96)	R-39.3 (6.92)	R-27.8 (4.89)	0.036 (0.20)

Temperature Indices

	R4.2	R12.6	R16.8	
T_{i1}	0.39	0.57	0.62	Min T on sheathing, at fastener along studs
T_{i2}	0.24	0.47	0.54	Min T on sheathing, between studs and fasteners

Temperature indices listed for selected scenarios. All other scenarios to be interpolated.

Detail 5.1.114

Exterior and Interior Insulated Wall Assembly with Brick Ties Supporting Brick Veneer

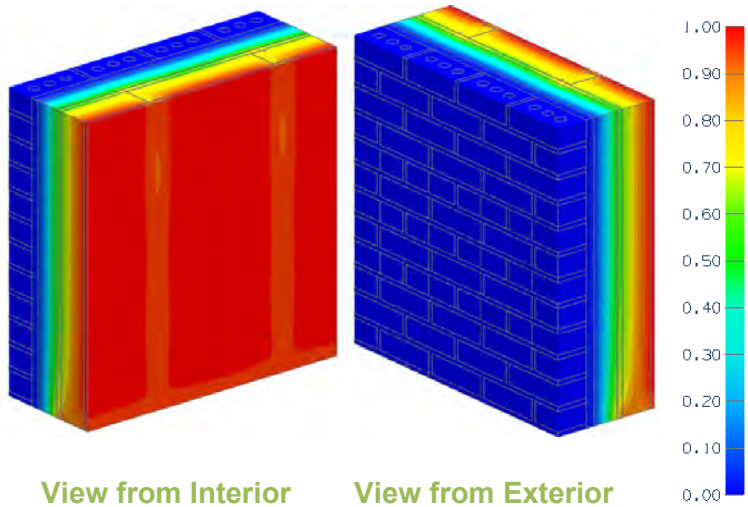

View from Interior View from Exterior

Thermal Performance Indicators

Assembly 1D (Nominal) R-Value	R_{1D}	R-15.3 (2.70 RSI) + exterior insulation
Transmittance / Resistance without Anomaly	U_o, R_o	"clear wall" U- and R-value without slab and shelf angle

Nominal (1D) vs. Assembly Performance Indicators

Exterior Insulation 1D R-Value (RSI)	R_{1D} ft²·hr·°F / Btu (m² K / W)	R_o ft²·hr·°F / Btu (m² K / W)	U_o Btu/ft² ·hr ·°F (W/m² K)
R-5 (0.88)	R-20.3 (3.58)	R-13.9 (2.45)	0.072 (0.41)
R-10 (1.76)	R-25.3 (4.46)	R-17.1 (3.00)	0.059 (0.33)
R-15 (2.64)	R-30.3 (5.34)	R-19.8 (3.48)	0.051 (0.29)
R-20 (3.52)	R-35.3 (6.22)	R-22.4 (3.95)	0.045 (0.25)
R-25 (4.40)	R-40.3 (7.10)	R-24.9 (4.39)	0.040 (0.23)

Detail 5.2.1

Exterior Insulated 3 5/8″ x 1 5/8″ Steel Stud (16″ O.C.) Wall Assembly with Horizontal Z-Girts (24″ O.C.) Supporting Metal Cladding – Intermediate Floor Intersection

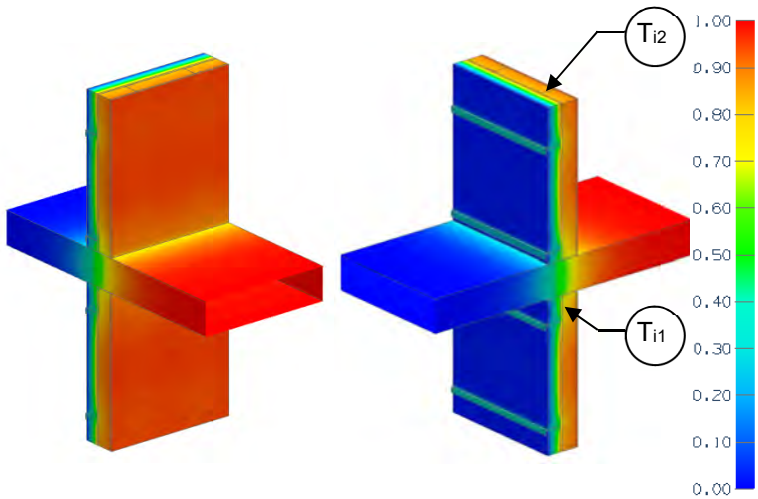

View from Interior View from Exterior

Thermal Performance Indicators

Assembly 1D (Nominal) R-Value	R_{1D}	R-3.2 (0.56 RSI) + exterior insulation
Transmittance / Resistance without Anomaly	U_o, R_o	"clear wall" U- and R-value without slab
Transmittance / Resistance	U, R	U- and R-values for overall assembly
Surface Temperature Index[1]	T_i	0 = exterior temperature 1 = interior temperature
Linear Transmittance	ψ	Incremental increase in transmittance per linear length of slab

[1]Assumptions and limitations for surface temperatures identified in ASHRAE 1365-RP

Nominal (1D) vs. Assembly Performance Indicators

Exterior Insulation 1D R-Value (RSI)	R_{1D} ft²·hr·°F / Btu (m² K / W)	R_o ft²·hr·°F / Btu (m² K / W)	U_o Btu/ft² ·hr ·°F (W/m² K)	R ft²·hr·°F / Btu (m² K / W)	U Btu/ft² ·hr ·°F (W/m² K)	ψ Btu/ft hr °F (W/m K)
R-5 (0.88)	R-8.2 (1.44)	R-6.9 (1.21)	0.146 (0.83)	R-4.74 (0.83)	0.211 (1.20)	0.433 (0.749)
R-15 (2.64)	R-18.2 (3.20)	R-11.3 (1.99)	0.088 (0.50)	R-6.45 (1.14)	0.155 (0.88)	0.445 (0.770)
R-25 (4.40)	R-28.2 (4.96)	R-14.6 (2.56)	0.069 (0.39)	R-7.61 (1.34)	0.131 (0.75)	0.418 (0.724)

Temperature Indices

	R5	R15	R25	
T_{i1}	0.50	0.58	0.63	Min T on sheathing, at slab, between studs
T_{i2}	0.73	0.84	0.88	Max T on sheathing, at studs, between girts

Detail 5.2.2

Exterior Insulated 3 5/8″ x 1 5/8″ Steel Stud (16″ o.c.) Wall Assembly with Horizontal Z-Girts (24″ o.c.) Supporting Metal Cladding – Intermediate Floor Intersection with Top Side Insulation

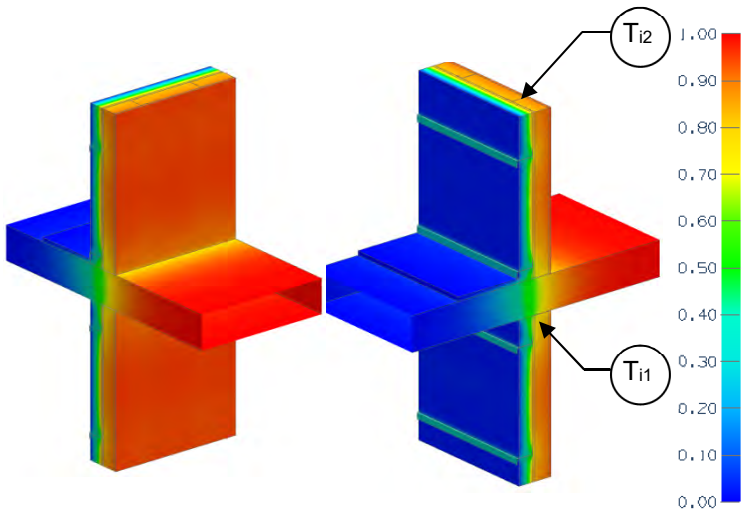

View from Interior View from Exterior

Thermal Performance Indicators

Assembly 1D (Nominal) R-Value	R_{1D}	R-3.2 (0.56 RSI) + exterior insulation
Transmittance / Resistance without Anomaly	U_o, R_o	"clear wall" U- and R-value, without slab
Transmittance / Resistance	U, R	U- and R-values for overall assembly
Surface Temperature Index[1]	T_i	0 = exterior temperature 1 = interior temperature
Linear Transmittance	ψ	Incremental increase in transmittance per linear length of slab

[1]Assumptions and limitations for surface temperatures identified in ASHRAE 1365-RP

Nominal (1D) vs. Assembly Performance Indicators

Base Assembly –Wall

Exterior Insulation 1D R-Value (RSI)	R_{1D} ft²·hr·°F / Btu (m² K / W)	R_o ft²·hr·°F / Btu (m² K / W)	U_o Btu/ft² ·hr ·°F (W/m² K)
R-15 (2.64)	R-18.2 (3.20)	R-11.3 (1.99)	0.088 (0.50)

Slab Linear Transmittance

Balcony Insulation Distance from wall ft (m)	R ft²·hr·°F / Btu (m² K / W)	U Btu/ft² ·hr ·°F (W/m² K)	ψ Btu/ft hr °F (W/m K)
0.00 (0.0)	R-6.5 (1.14)	0.155 (0.88)	0.445 (0.770)
0.66 (0.2)	R-7.0 (1.22)	0.144 (0.82)	0.402 (0.695)
1.31 (0.4)	R-7.1 (1.25)	0.141 (0.80)	0.395 (0.683)
2.62 (0.8)	R-7.1 (1.26)	0.139 (0.79)	0.393 (0.680)

Temperature Indices

D(ft)	0	0.66	1.31	2.62	
T_{i1}	0.58	0.61	0.62	0.62	Min T on sheathing, at slab, between studs
T_{i2}	0.84	0.84	0.85	0.85	Max T on sheathing, at studs, between girts

Detail 5.2.3

Exterior Insulated 3 5/8″ x 1 5/8″ Steel Stud (16″ o.c.) Wall Assembly with Horizontal Z-Girts (24″ o.c.) Supporting Metal Cladding – Intermediate Floor Intersection with Top & Under Side Insulation

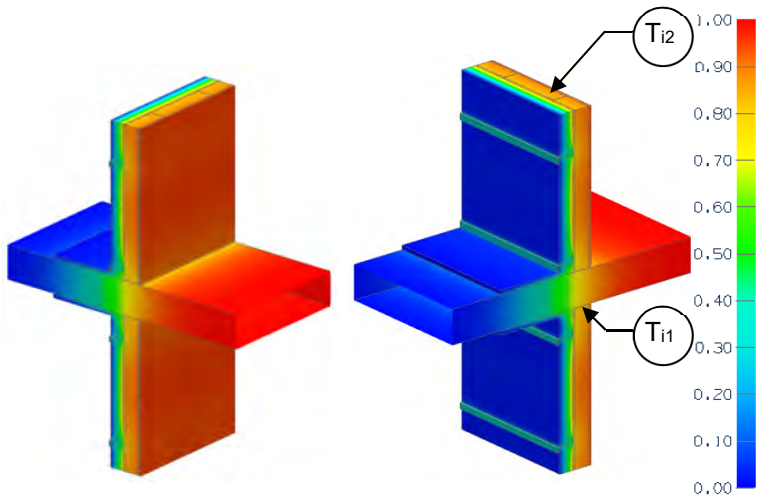

View from Interior View from Exterior

Thermal Performance Indicators

Assembly 1D (Nominal) R-Value	R_{1D}	R-3.2 (0.56 RSI) + exterior insulation
Transmittance / Resistance without Anomaly	U_o, R_o	"clear wall" U- and R-value, without slab
Transmittance / Resistance	U, R	U- and R-values for overall assembly
Surface Temperature Index[1]	T_i	0 = exterior temperature 1 = interior temperature
Linear Transmittance	ψ	Incremental increase in transmittance per linear length of slab

[1]Assumptions and limitations for surface temperatures identified in ASHRAE 1365-RP

Nominal (1D) vs. Assembly Performance Indicators

Base Assembly – Wall

Exterior Insulation 1D R-Value (RSI)	R_{1D} ft²·hr·°F / Btu (m² K / W)	R_o ft²·hr·°F / Btu (m² K / W)	U_o Btu/ft² ·hr ·°F (W/m² K)
R-15 (2.64)	R-18.2 (3.20)	R-11.3 (1.99)	0.088 (0.50)

Slab Linear Transmittance

Balcony Insulation Distance from wall ft (m)	R ft²·hr·°F / Btu (m² K / W)	U Btu/ft² ·hr ·°F (W/m² K)	ψ Btu/ft hr °F (W/m K)
0.00 (0.0)	R-6.5 (1.14)	0.155 (0.88)	0.445 (0.770)
0.66 (0.2)	R-7.2 (1.26)	0.140 (0.79)	0.342 (0.592)
1.31 (0.4)	R-7.5 (1.32)	0.134 (0.76)	0.306 (0.529)
2.62 (0.8)	R-7.6 (1.34)	0.131 (0.75)	0.287 (0.496)

Temperature Indices

D(ft)	0	0.66	1.31	2.62	
T_{i1}	0.58	0.66	0.69	0.70	Min T on sheathing, at slab, between studs
T_{i2}	0.84	0.85	0.85	0.85	Max T on sheathing, at studs, between girts

Detail 5.2.4

Exterior Insulated 3 5/8" x 1 5/8" Steel Stud (16" o.c.) Wall Assembly with Horizontal Z-girts (24" o.c.) Supporting Metal Cladding – Uninsulated Intermediate Floor Intersection with Uninsulated Curb

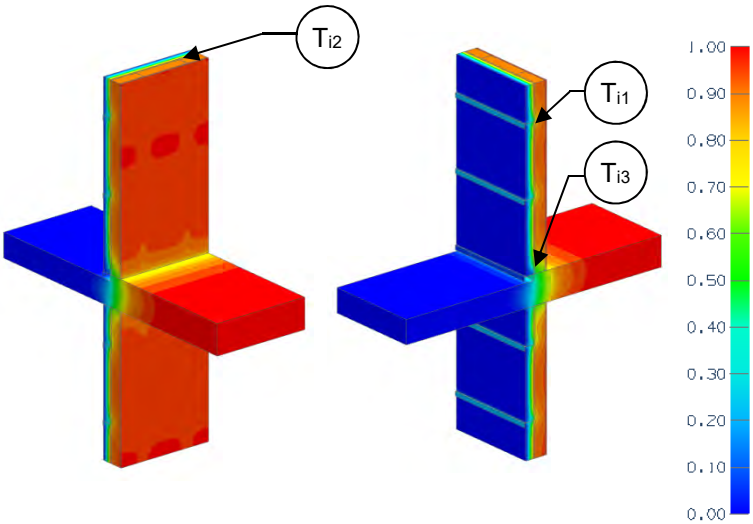

View from Interior View from Exterior

Thermal Performance Indicators

Assembly 1D (Nominal) R-Value	R_{1D}	R-3.2 (0.56 RSI) + exterior insulation
Transmittance / Resistance without Anomaly	U_o, R_o	"clear wall" U- and R-value, without slab
Transmittance / Resistance	U, R	U- and R-values for overall assembly
Surface Temperature Index[1]	T_i	0 = exterior temperature 1 = interior temperature
Linear Transmittance	ψ	Incremental increase in transmittance per linear length of slab

[1]Assumptions and limitations for surface temperatures identified in ASHRAE 1365-RP

Nominal (1D) vs. Assembly Performance Indicators

Exterior Insulation 1D R-Value (RSI)	R_{1D} ft²·hr·°F / Btu (m² K / W)	R_o ft²·hr·°F / Btu (m² K / W)	U_o Btu/ft² ·hr ·°F (W/m² K)	R ft²·hr·°F / Btu (m² K / W)	U Btu/ft² ·hr ·°F (W/m² K)	ψ Btu/ft hr °F (W/m K)
R-15 (2.64)	R-18.2 (3.20)	R-11.3 (1.99)	0.088 (0.50)	R-6.8 (1.19)	0.148 (0.84)	0.584 (1.011)

Temperature Indices

T_{i1}	0.71	Min T on sheathing away from slab, between studs at girts
T_{i2}	0.86	Max T on sheathing away from slab, between girts at studs
T_{i3}	0.45	Min T on slab exposed to interior air, at sheathing between studs

Detail 5.2.5

Exterior and Interior Insulated 3 5/8" x 1 5/8" Steel Stud (16" o.c.) Wall Assembly with Horizontal Z-girts (24" o.c.) Supporting Metal Cladding – Uninsulated Intermediate Floor Intersection with Uninsulated Curb

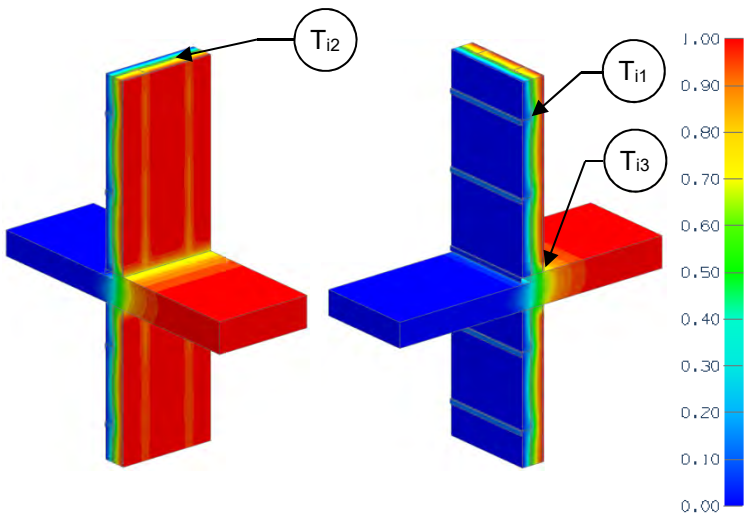

View from Interior View from Exterior

Thermal Performance Indicators

Assembly 1D (Nominal) R-Value	R_{1D}	R-14.2 (2.51 RSI) + exterior insulation
Transmittance / Resistance without Anomaly	U_o, R_o	"clear wall" U- and R-value, without slab
Transmittance / Resistance	U, R	U- and R-values for overall assembly
Surface Temperature Index[1]	T_i	0 = exterior temperature 1 = interior temperature
Linear Transmittance	ψ	Incremental increase in transmittance per linear length of slab

[1]Assumptions and limitations for surface temperatures identified in ASHRAE 1365-RP

Nominal (1D) vs. Assembly Performance Indicators

Exterior Insulation 1D R-Value (RSI)	R_{1D} ft²·hr·°F / Btu (m² K / W)	R_o ft²·hr·°F / Btu (m² K / W)	U_o Btu/ft² ·hr ·°F (W/m² K)	R ft²·hr·°F / Btu (m² K / W)	U Btu/ft² ·hr ·°F (W/m² K)	ψ Btu/ft ·hr·°F (W/m K)
R-15 (2.64)	R-29.2 (5.15)	R-18.5 (3.25)	0.054 (0.31)	R-8.6 (1.51)	0.116 (0.66)	0.612 (1.059)

Temperature Indices

T_{i1}	0.35	Min T on sheathing away from slab, between studs at girts
T_{i2}	0.73	Max T on sheathing away from slab, between girts at studs
T_{i3}	0.64	Min T on slab exposed to interior air, at gypsum between studs

Detail 5.2.6

Exterior Insulated 3 5/8" x 1 5/8" Steel Stud (16" o.c.) Wall Assembly with Horizontal Z-girts (24" o.c.) Supporting Metal Cladding – Uninsulated Intermediate Floor Intersection with Insulated Curb

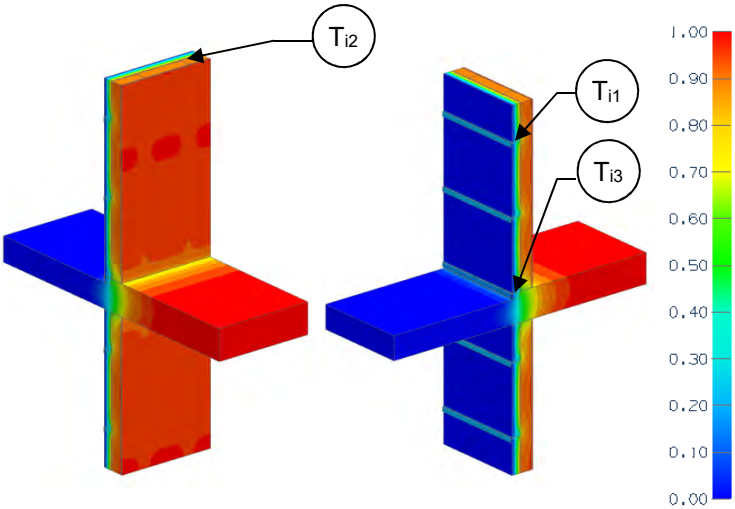

View from Interior View from Exterior

Thermal Performance Indicators

Assembly 1D (Nominal) R-Value	R_{1D}	R-3.2 (0.56 RSI) + exterior insulation
Transmittance / Resistance without Anomaly	U_o, R_o	"clear wall" U- and R-value, without slab
Transmittance / Resistance	U, R	U- and R-values for overall assembly
Surface Temperature Index[1]	T_i	0 = exterior temperature 1 = interior temperature
Linear Transmittance	ψ	Incremental increase in transmittance per linear length of slab

[1]Assumptions and limitations for surface temperatures identified in ASHRAE 1365-RP

Nominal (1D) vs. Assembly Performance Indicators

Exterior Insulation 1D R-Value (RSI)	R_{1D} ft²·hr·°F / Btu (m² K / W)	R_o ft²·hr·°F / Btu (m² K / W)	U_o Btu/ft² ·hr ·°F (W/m² K)	R ft²·hr·°F / Btu (m² K / W)	U Btu/ft² ·hr ·°F (W/m² K)	ψ Btu/ft hr °F (W/m K)
R-15 (2.64)	R-18.2 (3.20)	R-11.3 (1.99)	0.088 (0.50)	R-7.3 (1.28)	0.138 (0.78)	0.485 (0.840)

Temperature Indices

T_{i1}	0.71	Min T on sheathing away from slab, between studs at girts
T_{i2}	0.86	Max T on sheathing away from slab, between girts at studs
T_{i3}	0.57	Min T on slab exposed to interior air, at sheathing between studs

Detail 5.2.7

Exterior and Interior Insulated 3 5/8" x 1 5/8" Steel Stud (16" o.c.) Wall Assembly with Horizontal Z-girts (24" o.c.) Supporting Metal Cladding – Uninsulated Intermediate Floor Intersection with Insulated Curb

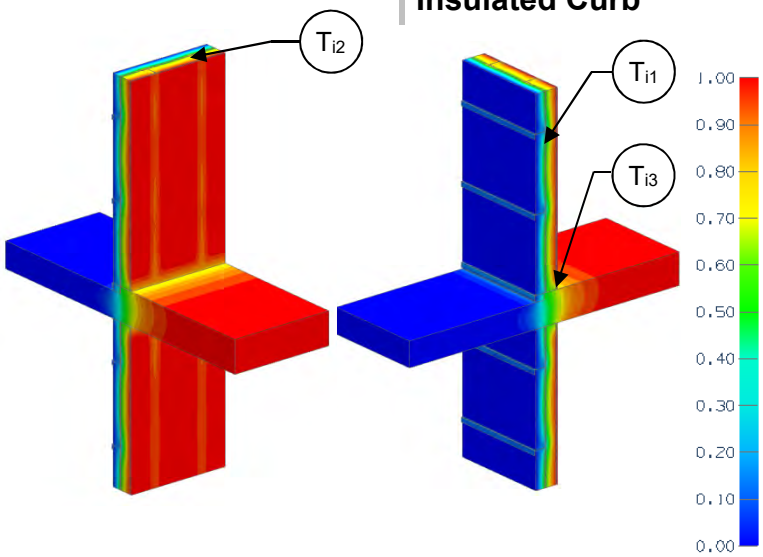

View from Interior View from Exterior

Thermal Performance Indicators

Assembly 1D (Nominal) R-Value	R_{1D}	R-14.2 (2.51 RSI) + exterior insulation
Transmittance / Resistance without Anomaly	U_o, R_o	"clear wall" U- and R-value, without slab
Transmittance / Resistance	U, R	U- and R-values for overall assembly
Surface Temperature Index[1]	T_i	0 = exterior temperature 1 = interior temperature
Linear Transmittance	ψ	Incremental increase in transmittance per linear length of slab

[1]Assumptions and limitations for surface temperatures identified in ASHRAE 1365-RP

Nominal (1D) vs. Assembly Performance Indicators

Exterior Insulation 1D R-Value (RSI)	R_{1D} ft²·hr·°F / Btu (m² K / W)	R_o ft²·hr·°F / Btu (m² K / W)	U_o Btu/ft² ·hr ·°F (W/m² K)	R ft²·hr·°F / Btu (m² K / W)	U Btu/ft² ·hr ·°F (W/m² K)	ψ Btu/ft hr °F (W/m K)
R-15 (2.64)	R-29.2 (5.15)	R-18.5 (3.25)	0.054 (0.31)	R-9.3 (1.63)	0.108 (0.61)	0.528 (0.914)

Temperature Indices

T_{i1}	0.35	Min T on sheathing away from slab, between studs at girts
T_{i2}	0.73	Max T on sheathing away from slab, between girts at studs
T_{i3}	0.70	Min T on slab exposed to interior air, at gypsum between studs

Detail 5.2.8

Exterior and Interior Insulated 3 5/8" x 1 5/8" Steel Stud (16" o.c.) Wall Assembly with Vertical Z Girts (16" o.c.) Supporting Stucco Cladding – Uninsulated Intermediate Floor Intersection

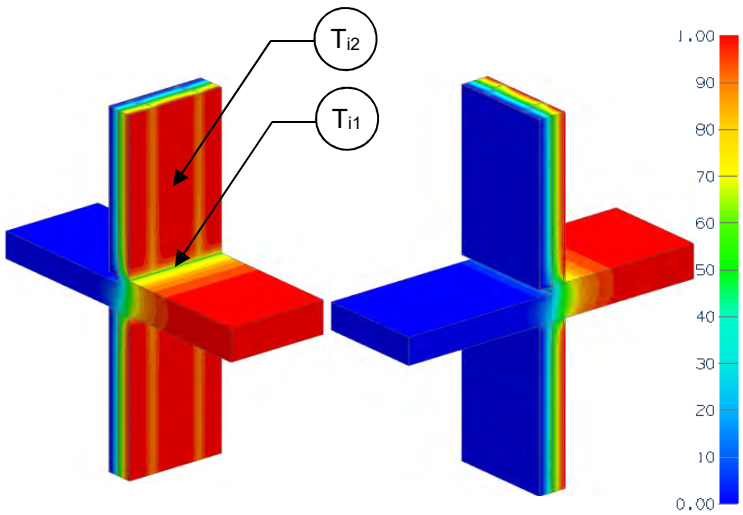

View from Interior View from Exterior

Thermal Performance Indicators

Assembly 1D (Nominal) R-Value	R_{1D}	R-14.5 (2.55 RSI) + exterior insulation
Transmittance / Resistance without Anomaly	U_o, R_o	"clear wall" U- and R-value, without slab
Transmittance / Resistance	U, R	U- and R-values for overall assembly
Surface Temperature Index[1]	T_i	0 = exterior temperature 1 = interior temperature
Linear Transmittance	ψ	Incremental increase in transmittance per linear length of slab

[1]Assumptions and limitations for surface temperatures identified in ASHRAE 1365-RP

Nominal (1D) vs. Assembly Performance Indicators

Exterior Insulation 1D R-Value (RSI)	R_{1D} ft²·hr·°F / Btu (m² K / W)	R_o ft²·hr·°F / Btu (m² K / W)	U_o Btu/ft² ·hr ·°F (W/m² K)	R ft²·hr·°F / Btu (m² K / W)	U Btu/ft² ·hr ·°F (W/m² K)	ψ Btu/ft ·hr·°F (W/m K)
R-10 (1.76)	R-24.5 (4.31)	R-13.0 (2.29)	0.077 (0.44)	R-6.6 (1.16)	0.152 (0.86)	0.664 (1.149)
R-15 (2.64)	R-29.5 (5.20)	R-14.1 (2.49)	0.071 (0.40)	R-6.9 (1.21)	0.146 (0.83)	0.665 (1.151)

Temperature Indices

	R10	R15	
T_{i1}	0.29	0.30	Min T on sheathing, along slab, between studs
T_{i2}	0.48	0.52	Max T on sheathing, at studs, between girts

Detail 5.2.9

Exterior Insulated 3 5/8” x 1 5/8” Steel Stud (16” o.c.) Drained EIFS Wall Assembly – Isokorb CM20 Thermally Broken Slab Projection without Concrete Curb

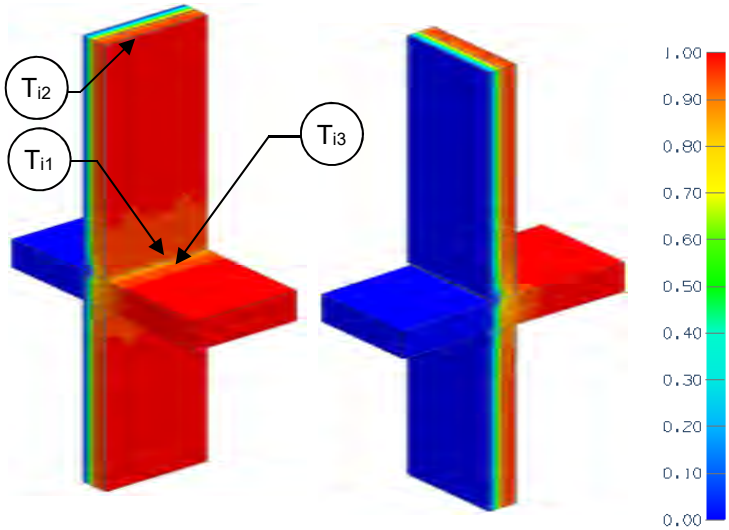

View from Interior View from Exterior

Thermal Performance Indicators

Assembly 1D (Nominal) R-Value	R_{1D}	R-2.7 (0.47 RSI) + exterior insulation
Transmittance / Resistance without Anomaly	U_o, R_o	“clear wall” U- and R-value, without slab
Transmittance / Resistance	U, R	U and R-values for the assembly
Surface Temperature Index[1]	T_i	0 = exterior temperature 1 = interior temperature
Linear Transmittance	ψ	Incremental increase in transmittance per linear length of slab

[1]Assumptions and limitations for surface temperatures identified in ASHRAE 1365-RP

Nominal (1D) vs. Assembly Performance Indicators

Exterior Insulation 1D R-Value (RSI)	R_{1D} ft²·hr·°F / Btu (m² K / W)	R_o ft²·hr·°F / Btu (m² K / W)	U_o Btu/ft² ·hr ·°F (W/m² K)	R ft²·hr·°F / Btu (m² K / W)	U Btu/ft² ·hr ·°F (W/m² K)	ψ Btu/ft hr °F (W/m K)
R-15 (2.64)	R-17.7 (3.12)	R-17.4 (3.06)	0.057 (0.33)	R-12.1 (2.12)	0.083 (0.40)	0.253 (0.438)

Temperature Indices

T_{i1}	0.66	Min T on sheathing, along gap below EIFS at track, between studs
T_{i2}	0.89	Max T on sheathing, away from slab, at studs
T_{i3}	0.71	Min T on slab, along gypsum between studs, exposed to interior air

Detail 5.2.10

Exterior and Interior Insulated 3 5/8" x 1 5/8" Steel Stud (16" o.c.) Drained EIFS Wall Assembly – Isokorb CM20Thermally Broken Slab Projection without Concrete Curb

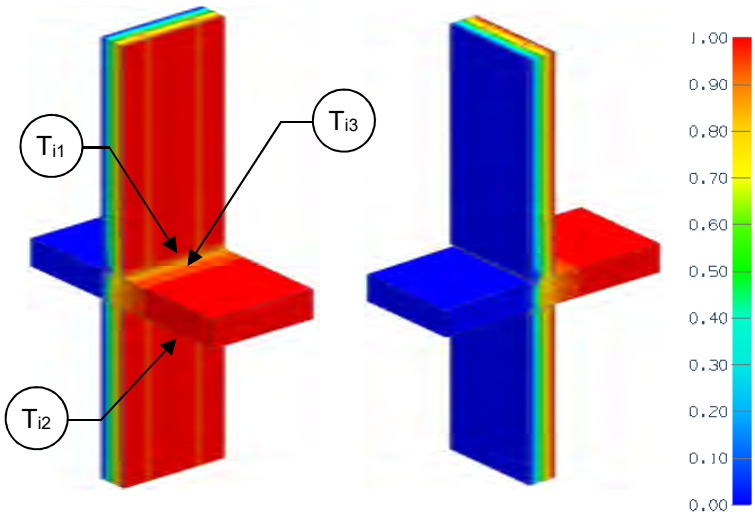

View from Interior View from Exterior

Thermal Performance Indicators

Assembly 1D (Nominal) R-Value	R_{1D}	R-14.2 (2.51 RSI) + exterior insulation
Transmittance / Resistance without Anomaly	U_o, R_o	"clear wall" U- and R-value, without slab
Transmittance / Resistance	U, R	U and R-values for the assembly
Surface Temperature Index[1]	T_i	0 = exterior temperature 1 = interior temperature
Linear Transmittance	ψ	Incremental increase in transmittance per linear length of slab

[1]Assumptions and limitations for surface temperatures identified in ASHRAE 1365-RP

Nominal (1D) vs. Assembly Performance Indicators

Exterior Insulation 1D R-Value (RSI)	R_{1D} ft²·hr·°F / Btu (m² K / W)	R_o ft²·hr·°F / Btu (m² K / W)	U_o Btu/ft² ·hr ·°F (W/m² K)	R ft²·hr·°F / Btu (m² K / W)	U Btu/ft² ·hr ·°F (W/m² K)	ψ Btu/ft hr °F (W/m K)
R-15 (2.64)	R-29.2 (5.1)	R-24.0 (4.23)	0.042 (0.24)	R-15.0 (2.64)	0.067 (0.38)	0.246 (0.426)

Temperature Indices

T_{i1}	0.45	Min T on sheathing, along gap below EIFS at track, between studs
T_{i2}	0.77	Max T on sheathing, below slab, between studs
T_{i3}	0.68	Min T on slab, along gypsum between studs, exposed to interior air

Detail 5.2.11

Exterior and Interior Insulated 3 5/8" x 1 5/8" Steel Stud (16" o.c.) Wall Assembly with Horizontal Z-girts (24" o.c.) Supporting Metal Cladding – Isokorb CM20 Thermally Broken Slab Projection with Uninsulated Curb

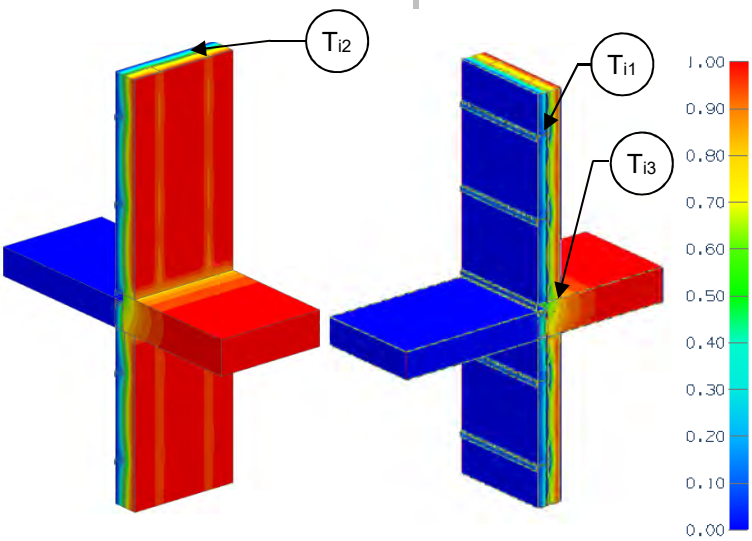

View from Interior View from Exterior

Thermal Performance Indicators

Assembly 1D (Nominal) R-Value	R_{1D}	R-14.2 (2.51 RSI) + exterior insulation
Transmittance / Resistance without Anomaly	U_o, R_o	"clear wall" U- and R-value, without slab
Transmittance / Resistance	U, R	U- and R-values for overall assembly
Surface Temperature Index[1]	T_i	0 = exterior temperature 1 = interior temperature
Linear Transmittance	ψ	Incremental increase in transmittance per linear length of slab

[1]Assumptions and limitations for surface temperatures identified in ASHRAE 1365-RP

Nominal (1D) vs. Assembly Performance Indicators

Exterior Insulation 1D R-Value (RSI)	R_{1D} ft²·hr·°F / Btu (m² K / W)	R_o ft²·hr·°F / Btu (m² K / W)	U_o Btu/ft² ·hr ·°F (W/m² K)	R ft²·hr·°F / Btu (m² K / W)	U Btu/ft² ·hr ·°F (W/m² K)	ψ Btu/ft hr °F (W/m K)
R-15 (2.64)	R-29.2 (5.14)	R-18.5 (3.25)	0.054 (0.31)	R-11.6 (2.04)	0.087 (0.49)	0.319 (0.551)

Temperature Indices

T_{i1}	0.35	Min T on sheathing away from slab, between studs at girts
T_{i2}	0.73	Max T on sheathing away from slab, between girts at studs
T_{i3}	0.77	Min T on slab exposed to interior air, at gypsum between studs

Detail 5.2.12

Exterior Insulated 3 5/8" x 1 5/8" Steel Stud (16" o.c.) Wall Assembly with Horizontal Z-girts (24" o.c.) Supporting Metal Cladding – Isokorb CM20 Thermally Broken Slab Projection with Uninsulated Curb

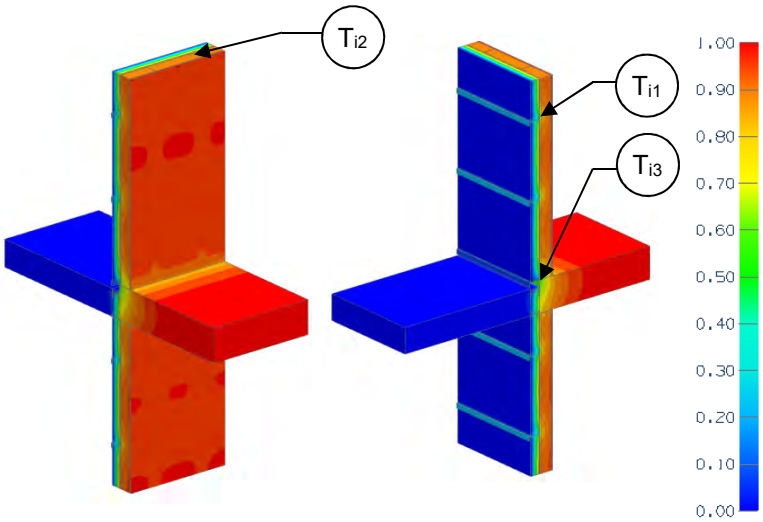

View from Interior View from Exterior

Thermal Performance Indicators

Assembly 1D (Nominal) R-Value	R_{1D}	R-3.2 (0.56 RSI) + exterior insulation
Transmittance / Resistance without Anomaly	U_o, R_o	"clear wall" U- and R-value, without slab
Transmittance / Resistance	U, R	U- and R-values for overall assembly
Surface Temperature Index[1]	T_i	0 = exterior temperature 1 = interior temperature
Linear Transmittance	ψ	Incremental increase in transmittance per linear length of slab

[1]Assumptions and limitations for surface temperatures identified in ASHRAE 1365-RP

Nominal (1D) vs. Assembly Performance Indicators

Exterior Insulation 1D R-Value (RSI)	R_{1D} ft²·hr·°F / Btu (m² K / W)	R_o ft²·hr·°F / Btu (m² K / W)	U_o Btu/ft² ·hr ·°F (W/m² K)	R ft²·hr·°F / Btu (m² K / W)	U Btu/ft² ·hr ·°F (W/m² K)	ψ Btu/ft hr °F (W/m K)
R-15 (2.64)	R-18.2 (3.20)	R-11.3 (1.99)	0.088 (0.50)	R-8.7 (1.53)	0.115 (0.65)	0.261 (0.452)

Temperature Indices

T_{i1}	0.71	Min T on sheathing away from slab, between studs at girts
T_{i2}	0.86	Max T on sheathing away from slab, between girts at studs
T_{i3}	0.60	Min T on slab exposed to interior air, at sheathing between studs

Detail 5.2.13

Exterior Insulated 3 5/8" x 1 5/8" Steel Stud (16" o.c.) Wall Assembly with Horizontal Z-girts (24" o.c.) Supporting Metal Cladding – Isokorb CM20 Thermally Broken Slab Projection with Insulated Curb

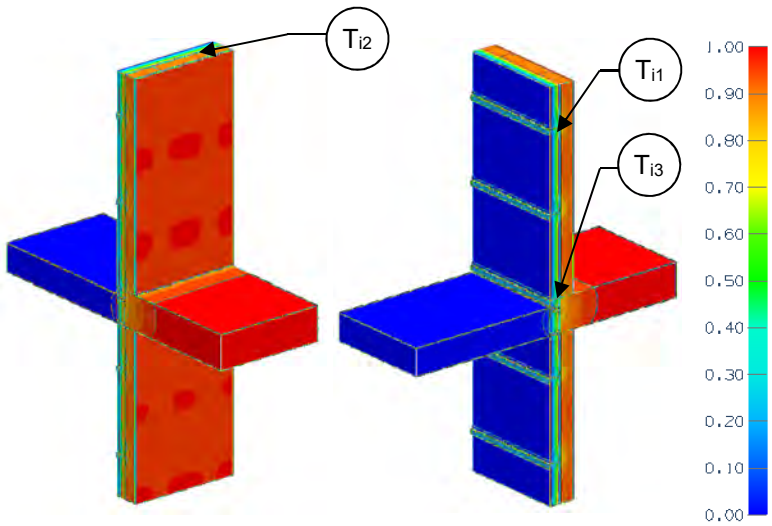

View from Interior View from Exterior

Thermal Performance Indicators

Assembly 1D (Nominal) R-Value	R_{1D}	R-3.2 (0.56 RSI) + exterior insulation
Transmittance / Resistance without Anomaly	U_o, R_o	"clear wall" U- and R-value, without slab
Transmittance / Resistance	U, R	U- and R-values for overall assembly
Surface Temperature Index[1]	T_i	0 = exterior temperature 1 = interior temperature
Linear Transmittance	ψ	Incremental increase in transmittance per linear length of slab

[1]Assumptions and limitations for surface temperatures identified in ASHRAE 1365-RP

Nominal (1D) vs. Assembly Performance Indicators

Exterior Insulation 1D R-Value (RSI)	R_{1D} ft²·hr·°F / Btu (m² K / W)	R_o ft²·hr·°F / Btu (m² K / W)	U_o Btu/ft² ·hr ·°F (W/m² K)	R ft²·hr·°F / Btu (m² K / W)	U Btu/ft² ·hr ·°F (W/m² K)	ψ Btu/ft hr °F (W/m K)
R-15 (2.64)	R-18.2 (3.20)	R-11.3 (1.99)	0.088 (0.50)	R-10.0 (1.76)	0.100 (0.57)	0.117 (0.203)

Temperature Indices

T_{i1}	0.71	Min T on sheathing away from slab, between studs at girts
T_{i2}	0.86	Max T on sheathing away from slab, between girts at studs
T_{i3}	0.77	Min T on slab exposed to interior air, at sheathing between studs

Detail 5.2.14

Exterior and Interior Insulated 3 5/8" x 1 5/8" Steel Stud (16" o.c.) Wall Assembly with Horizontal Z-girts (24" o.c.) Supporting Metal Cladding – Isokorb CM20 Thermally Broken Slab Projection with Insulated Curb

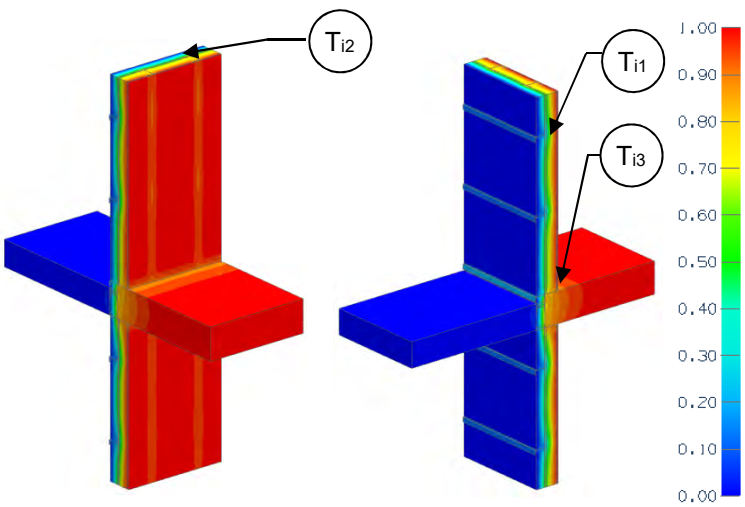

View from Interior View from Exterior

Thermal Performance Indicators

Assembly 1D (Nominal) R-Value	R_{1D}	R-14.2 (2.51 RSI) + exterior insulation
Transmittance / Resistance without Anomaly	U_o, R_o	"clear wall" U- and R-value, without slab
Transmittance / Resistance	U, R	U- and R-values for overall assembly
Surface Temperature Index[1]	T_i	0 = exterior temperature 1 = interior temperature
Linear Transmittance	ψ	Incremental increase in transmittance per linear length of slab

[1]Assumptions and limitations for surface temperatures identified in ASHRAE 1365-RP

Nominal (1D) vs. Assembly Performance Indicators

Exterior Insulation 1D R-Value (RSI)	R_{1D} ft²·hr·°F / Btu (m² K / W)	R_o ft²·hr·°F / Btu (m² K / W)	U_o Btu/ft² ·hr ·°F (W/m² K)	R ft²·hr·°F / Btu (m² K / W)	U Btu/ft² ·hr ·°F (W/m² K)	ψ Btu/ft hr °F (W/m K)
R-15 (2.64)	R-29.2 (5.14)	R-18.5 (3.25)	0.054 (0.31)	R-13.6 (2.40)	0.073 (0.42)	0.189 (0.327)

Temperature Indices

T_{i1}	0.35	Min T on sheathing away from slab, between studs at girts
T_{i2}	0.73	Max T on sheathing away from slab, between girts at studs
T_{i3}	0.85	Min T on slab exposed to interior air, at gypsum between studs

Detail 5.2.15

Exterior Insulated 3 5/8" x 1 5/8" Steel Stud (16" o.c.) Drained EIFS Wall Assembly – Intermediate Floor Intersection

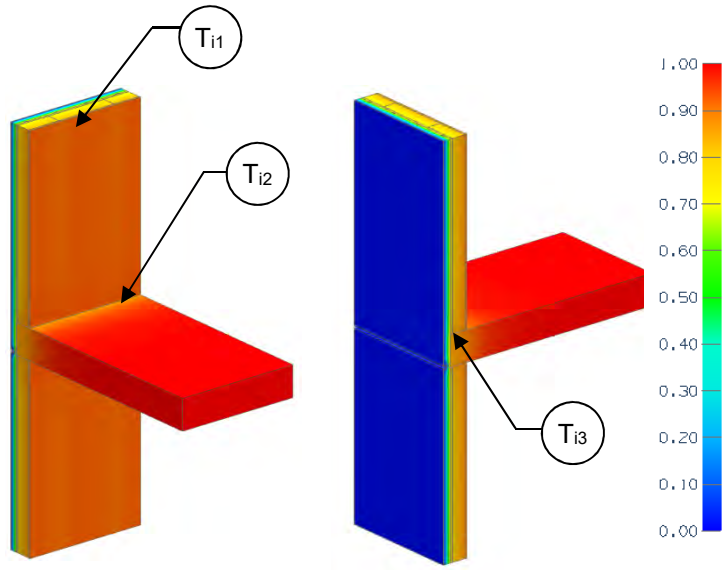

View from Interior View from Exterior

Thermal Performance Indicators

Assembly 1D (Nominal) R-Value	R_{1D}	R-2.7 (0.47 RSI) + exterior insulation
Transmittance / Resistance without Anomaly	U_o, R_o	"clear wall" U- and R-value without slab
Transmittance / Resistance	U, R	U- and R-values for overall assembly
Surface Temperature Index[1]	T_i	0 = exterior temperature 1 = interior temperature
Linear Transmittance	ψ	Incremental increase in transmittance per linear length of slab

[1]Assumptions and limitations for surface temperatures identified in ASHRAE 1365-RP

Nominal (1D) vs. Assembly Performance Indicators

Exterior Insulation 1D R-Value (RSI)	R_{1D} ft²·hr·°F / Btu (m² K / W)	R_o ft²·hr·°F / Btu (m² K / W)	U_o Btu/ft² ·hr ·°F (W/m² K)	R ft²·hr·°F / Btu (m² K / W)	U Btu/ft² ·hr ·°F (W/m² K)	ψ Btu/ft ·hr ·°F (W/m K)
R-7.5 (1.32)	R-10.2 (1.80)	R-10.0 (1.76)	0.100 (0.57)	R-9.7 (1.70)	0.104 (0.59)	0.032 (0.055)
R-11.3 (1.98)	R-13.9 (2.46)	R-13.7 (2.41)	0.073 (0.41)	R-13.3 (2.35)	0.075 (0.43)	0.018 (0.032)
R-15 (2.64)	R-17.7 (3.12)	R-17.4 (3.06)	0.057 (0.33)	R-17.0 (2.99)	0.059 (0.33)	0.012 (0.022)

Temperature Indices

	R7.5	R11.3	R15	
T_{i1}	0.80	0.85	0.88	Min T on sheathing, between studs
T_{i2}	0.86	0.90	0.93	Max T on sheathing, along steel track at slab
T_{i3}	0.91	0.94	0.95	Min T on slab, at edge interior drywall, exposed to interior air

Detail 5.2.16

Exterior and Interior Insulated 3 5/8" x 1 5/8" Steel Stud (16" o.c.) Drained EIFS Wall Assembly – Intermediate Floor Intersection

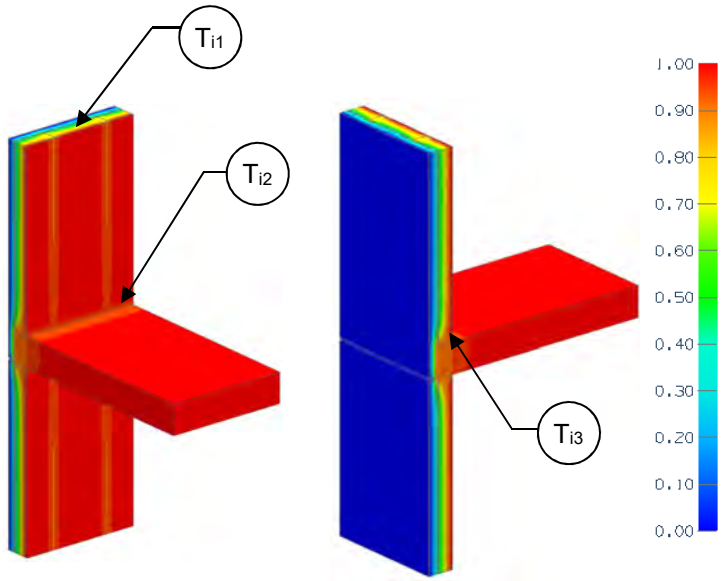

View from Interior View from Exterior

Thermal Performance Indicators

Assembly 1D (Nominal) R-Value	R_{1D}	R-14.2 (2.51 RSI) + exterior insulation
Transmittance / Resistance without Anomaly	U_o, R_o	"clear wall" U- and R-value without slab
Transmittance / Resistance	U, R	U- and R-values for overall assembly
Surface Temperature Index[1]	T_i	0 = exterior temperature 1 = interior temperature
Linear Transmittance	ψ	Incremental increase in transmittance per linear length of slab

[1]Assumptions and limitations for surface temperatures identified in ASHRAE 1365-RP

Nominal (1D) vs. Assembly Performance Indicators

Exterior Insulation 1D R-Value (RSI)	R_{1D} ft²·hr·°F / Btu (m² K / W)	R_o ft²·hr·°F / Btu (m² K / W)	U_o Btu/ft² ·hr ·°F (W/m² K)	R ft²·hr·°F / Btu (m² K / W)	U Btu/ft² ·hr ·°F (W/m² K)	ψ Btu/ft ·hr ·°F (W/m K)
R-7.5 (1.32)	R-21.7 (3.83)	R-16.6 (2.93)	0.060 (0.34)	R-14.5 (2.55)	0.069 (0.39)	0.076 (0.132)
R-15 (2.64)	R-29.2 (5.15)	R-24.0 (4.23)	0.042 (0.24)	R-22.0 (3.88)	0.045 (0.26)	0.032 (0.056)

Temperature Indices

	R7.5	R15	
T_{i1}	0.41	0.58	Min T on sheathing, between studs
T_{i2}	0.85	0.91	Max T on sheathing, along steel track at slab
T_{i3}	0.90	0.94	Min T on slab, at edge interior drywall, exposed to interior air

Detail 5.2.17

Exterior Insulated 3 5/8" x 1 5/8" Steel Stud (16" o.c.) Wall Assembly with Thermally Broken ISO Clip System Supporting Vertical Sub-girts – Intermediate Concrete Floor Intersection

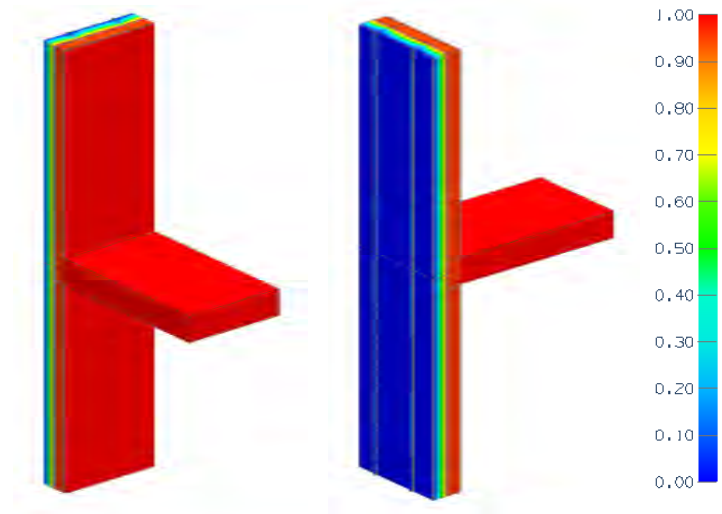

View from Interior View from Exterior

Thermal Performance Indicators

Assembly 1D (Nominal) R-Value	R_{1D}	R-3.3 (0.58 RSI) + exterior insulation
Transmittance / Resistance without Anomaly	U_o, R_o	"clear wall" U- and R-value without slab
Transmittance / Resistance	U, R	U- and R-values for overall assembly
Linear Transmittance	ψ	Incremental increase in transmittance per linear length of slab

Nominal (1D) vs. Assembly Performance Indicators

Exterior Insulation 1D R-Value (RSI)	R_{1D} ft²·hr·°F / Btu (m² K / W)	R_o ft²·hr·°F / Btu (m² K / W)	U_o Btu/ft² ·hr ·°F (W/m² K)	R ft²·hr·°F / Btu (m² K / W)	U Btu/ft² ·hr ·°F (W/m² K)	ψ Btu/ft ·hr ·°F (W/m K)
16.8 (2.96)	20.1 (3.54)	R-15.1 (2.66)	0.066 (0.376)	14.7 (2.59)	0.068 (0.388)	0.027 (0.046)
21.0 (3.70)	24.2 (4.28)	R-16.7 (2.94)	0.060 (0.340)	16.4 (2.89)	0.061 (0.347)	0.017 (0.029)
25.2 (4.44)	28.5 (5.02)	R-18.0 (3.18)	0.055 (0.315)	17.9 (3.14)	0.056 (0.319)	0.009 (0.016)

Detail 5.2.18

Exterior Insulated 3 5/8" x 1 5/8" Steel Stud (16" o.c.) Wall Assembly with Thermally Broken ISO Clip System Supporting Horizontal Sub-girts – Intermediate Concrete Floor Intersection

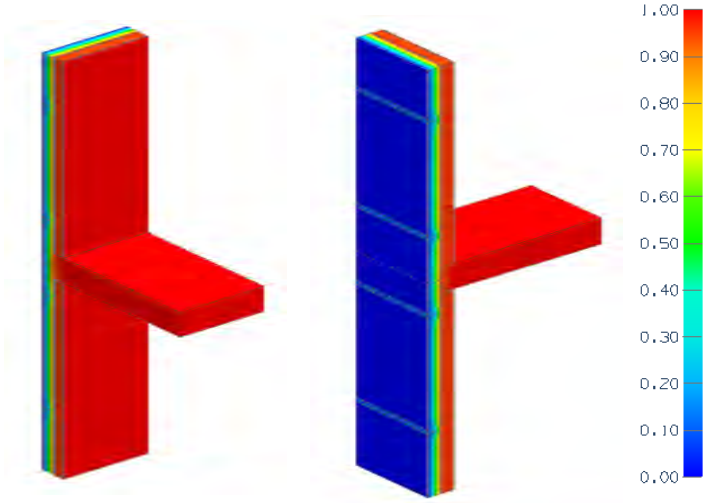

View from Interior View from Exterior

Thermal Performance Indicators

Assembly 1D (Nominal) R-Value	R_{1D}	R-3.3 (0.58 RSI) + exterior insulation
Transmittance / Resistance without Anomaly	U_o, R_o	"clear wall" U- and R-value without slab
Transmittance / Resistance	U, R	U- and R-values for overall assembly
Linear Transmittance	ψ	Incremental increase in transmittance per linear length of slab

Nominal (1D) vs. Assembly Performance Indicators

Exterior Insulation 1D R-Value (RSI)	R_{1D} ft²·hr·°F / Btu (m² K / W)	R_o ft²·hr·°F / Btu (m² K / W)	U_o Btu/ft² ·hr ·°F (W/m² K)	R ft²·hr·°F / Btu (m² K / W)	U Btu/ft ·hr ·°F (W/m² K)	ψ Btu/ft ·hr ·°F (W/m K)
16.8 (2.96)	20.1 (3.54)	R-16.3 (2.87)	0.061 (0.349)	15.4 (2.71)	0.065 (0.369)	0.027 (0.046)
21.0 (3.70)	24.3 (4.28)	R-18.6 (3.28)	0.054 (0.305)	17.5 (3.09)	0.057 (0.322)	0.017 (0.029)
25.2 (4.44)	28.5 (5.02)	R-20.7 (3.65)	0.048 (0.274)	19.6 (3.45)	0.051 (0.289)	0.009 (0.016)

Detail 5.2.19

Exterior and Interior Insulated 3 5/8" x 1 5/8" Steel Stud (16" o.c.) Wall Assembly with Vertical Z-girts (16" o.c.) Supporting Stucco Cladding – Steel Framed Floor with Cross Cavity Flashing

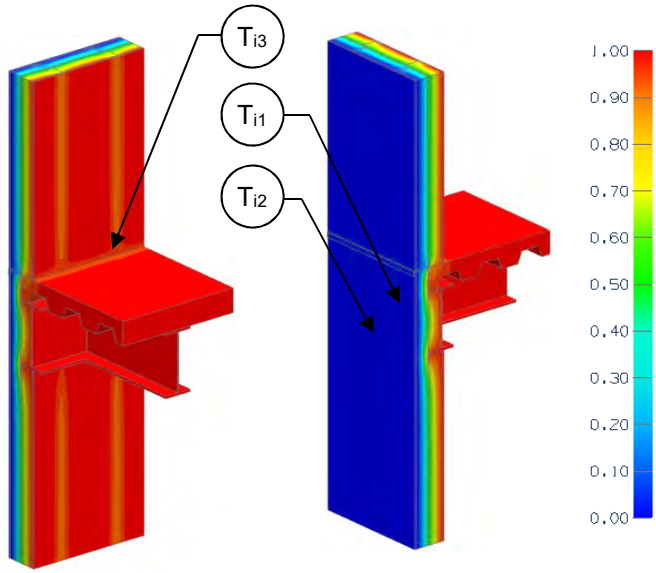

View from Interior View from Exterior

Thermal Performance Indicators

Assembly 1D (Nominal) R-Value	R_{1D}	R-14.5 (2.55 RSI) + exterior insulation
Transmittance / Resistance without Anomaly	U_o, R_o	"clear wall" U- and R-value, without slab
Transmittance / Resistance	U, R	U- and R-values for overall assembly
Surface Temperature Index[1]	T_i	0 = exterior temperature 1 = interior temperature
Linear Transmittance	ψ	Incremental increase in transmittance per linear length steel framed floor

[1]Assumptions and limitations for surface temperatures identified in ASHRAE 1365-RP

Nominal (1D) vs. Assembly Performance Indicators

Exterior Insulation 1D R-Value (RSI)	R_{1D} ft²·hr·°F / Btu (m² K / W)	R_o ft²·hr·°F / Btu (m² K / W)	U_o Btu/ft² ·hr ·°F (W/m² K)	R ft²·hr·°F / Btu (m² K / W)	U Btu/ft² ·hr ·°F (W/m² K)	ψ Btu/ft ·hr·°F (W/m K)
R-10 (1.76)	R-24.5 (4.31)	R-13.0 (2.29)	0.077 (0.44)	R-10.5 (1.85)	0.095 (0.54)	0.178 (0.309)
R-15 (2.64)	R-29.5 (5.20)	R-14.1 (2.49)	0.071 (0.40)	R-11.5 (2.03)	0.087 (0.49)	0.159 (0.275)

Temperature Indices

	R10	R15	
T_{i1}	0.35	0.36	Min T on sheathing, mid height of cavity behind I-beam, aligned with external girts
T_{i2}	0.90	0.92	Max T on sheathing, bottom of cavity behind I- beam, beside lower wall track, centered between external girts
T_{i3}	0.08	0.86	Min T on floor slab, at gypsum and studs, along upper track

Detail 5.2.20

Exterior Insulated 3 5/8'' x 1 5/8'' Steel Stud (16'' o.c.) Wall Assembly with Fiberglass Spacer and Through Insulation Fasteners Supporting Cladding – Insulated Intermediate Floor Intersection

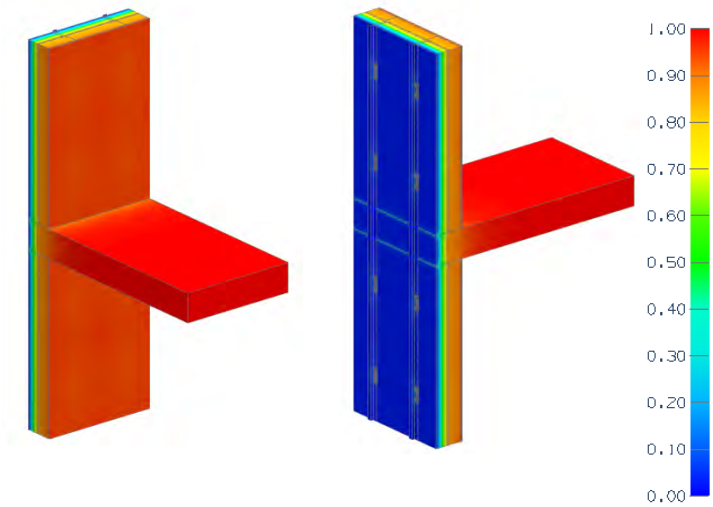

View from Interior View from Exterior

Thermal Performance Indicators

Assembly 1D (Nominal) R-Value	R_{1D}	R-3.3 (0.58 RSI) + exterior insulation
Transmittance / Resistance without Anomaly	U_o, R_o	"clear wall" U- and R-value
Transmittance / Resistance	U, R	U- and R-values for overall assembly
Linear Transmittance	ψ	Incremental increase in transmittance per linear length steel framed floor

Nominal (1D) vs. Assembly Performance Indicators

Exterior Insulation 1D R-value (RSI)	R_{1D} ft²·hr·°F / Btu (m² K / W)	R_o ft²·hr·°F / Btu (m² K / W)	U_o Btu/ft² ·hr ·°F (W/m² K)	R ft²·hr·°F / Btu (m² K / W)	U Btu/ft² ·hr ·°F (W/m² K)	ψ Btu/ft ·hr·°F (W/m K)
R-14.7 (2.59)	R-18.0 (3.17)	R-15.0 (2.65)	0.066 (0.38)	R-14.9 (2.63)	0.070 (0.38)	0.035 (0.060)

Detail 5.2.21

Exterior Insulated 3 5/8'' x 1 5/8'' Steel Stud (16'' o.c.) Wall Assembly with Thermally Isolated Aluminum Clip Horizontal Sub-girt System Supporting Cladding – Intermediate Floor Intersection

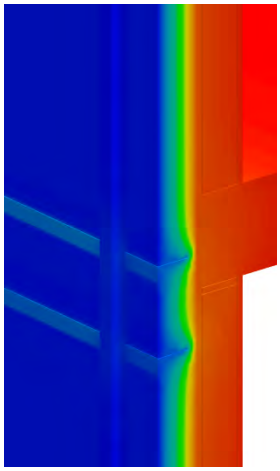

View of Intersection

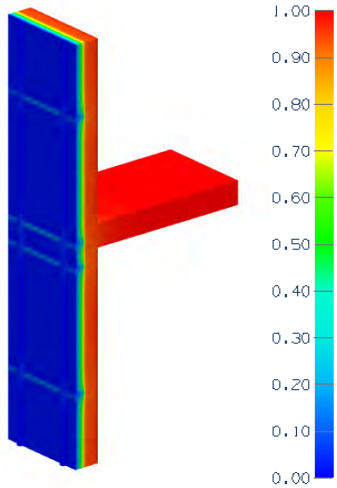

View from Exterior

Thermal Performance Indicators

Assembly 1D (Nominal) R-Value	R_{1D}	R-3.3 (0.58 RSI) + exterior insulation
Transmittance / Resistance	U, R	U- and R-values for overall assembly
Linear Transmittance	ψ	Incremental increase in transmittance per linear length of slab

Nominal (1D) vs. Assembly Performance Indicators

Assembly – Exterior Insulated Assembly

Clip Type	Exterior Insulation 1D R-Value (RSI)	R_{1D} ft²·hr·°F / Btu (m² K / W)	34" Vertical Clip Spacing		41" Vertical Clip Spacing		48" Vertical Clip Spacing		ψ Btu/ft hr °F (W/m K)
			R ft²·hr·°F / Btu (m² K / W)	U Btu/ft² ·hr ·°F (W/m² K)	R ft²·hr·°F / Btu (m² K / W)	U Btu/ft² ·hr ·°F (W/m² K)	R ft²·hr·°F / Btu (m² K / W)	U Btu/ft² ·hr ·°F (W/m² K)	
T100	R-16.8 (2.96)	R-21.1 (3.54)	R-15.6 (2.75)	0.064 (0.364)	R-16.1 (2.84)	0.062 (0.354)	R-16.4 (2.89)	0.061 (0.346)	0.029 (0.05)
T125	R-21.0 (3.70)	R-24.3 (5.28)	R-18.2 (3.20)	0.055 (0.312)	R-18.9 (3.32)	0.053 (0.303)	R-19.2 (3.39)	0.052 (0.297)	0.041 (0.07)
T150	R-25.2 (4.44)	R-28.5 (5.02)	R-20.8 (3.67)	0.048 (0.275)	R-21.3 (3.75)	0.047 (0.266)	R-21.7 (3.83)	0.046 (0.259)	0.041 (0.07)

Detail 5.2.22

Exterior Insulated 3 5/8" x 1 5/8" Steel Stud (16"o.c.) Wall Assembly with TAC Fiber Reinforced Plastic Girts Supporting Cladding – Intermediate Floor Intersection

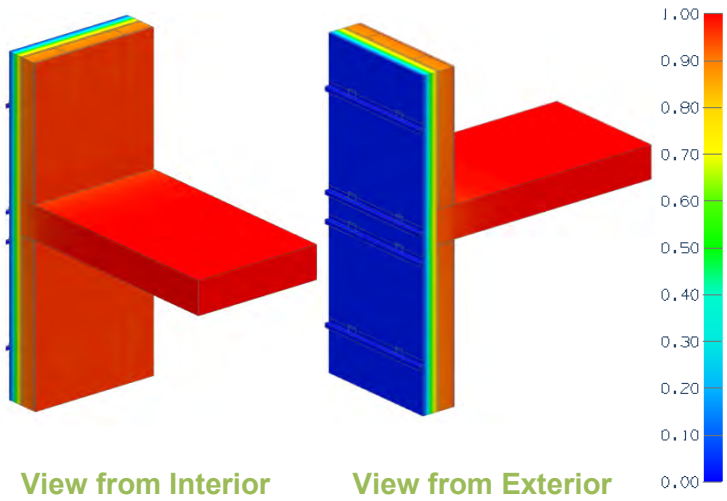

View from Interior View from Exterior

Thermal Performance Indicators

Assembly 1D (Nominal) R-Value	R_{1D}	R-3.3 (0.58 RSI) + exterior insulation
Transmittance / Resistance	U, R	U- and R-values for overall assembly
Linear Transmittance	ψ	Incremental increase in transmittance per linear length of slab

Nominal (1D) vs. Assembly Performance Indicators

Without Fiberglass Batt Insulation in Stud Cavity

Exterior Insulation 1D R-Value (RSI)	R_{1D} ft²·hr·°F / Btu (m² K / W)	24" Vertical Clip Spacing		36" Vertical Clip Spacing		48" Vertical Clip Spacing		ψ Btu/ft hr °F (W/m K)
		R ft²·hr·°F / Btu (m² K / W)	U Btu/ft² ·hr ·°F (W/m² K)	R ft²·hr·°F / Btu (m² K / W)	U Btu/ft² ·hr ·°F (W/m² K)	R ft²·hr·°F / Btu (m² K / W)	U Btu/ft² ·hr ·°F (W/m² K)	
R-12.6 (2.22)	R-15.8 (2.78)	R-14.7 (2.56)	0.068 (0.39)	R-14.9 (2.63)	0.067 (0.38)	R-14.9 (2.63)	0.067 (0.38)	0.017 (0.029)
R-16.8 (3.00)	R-20.0 (3.52)	R-18.9 (3.33)	0.053 (0.30)	R-18.9 (3.33)	0.053 (0.30)	R-19.2 (3.33)	0.052 (0.30)	0.009 (0.016)
R-21.0 (3.70)	R-24.4 (4.30)	R-22.7 (4.00)	0.044 (0.25)	R-23.2 (4.00)	0.043 (0.25)	R-23.2 (4.00)	0.043 (0.25)	0.008 (0.014)
R-25.2 (4.40)	R-28.4 (5.00)	R-27.0 (4.76)	0.037 (0.21)	R-27.0 (4.76)	0.037 (0.21)	R-27.0 (4.76)	0.037 (0.21)	0.008 (0.014)

Detail 5.2.23

Exterior Insulated 3 5/8" x 1 5/8" Steel Stud (16" o.c.) Wall Assembly with Thermally Broken Aluminum Clip Rail System (24" o.c.) Supporting Cladding – Intermediate Floor Intersection

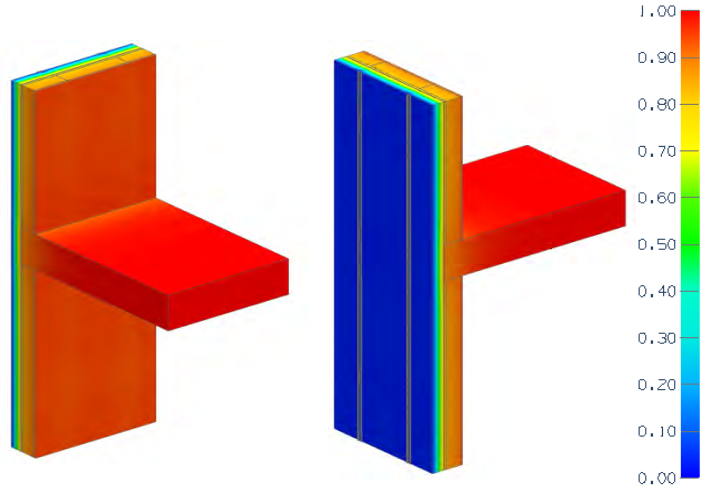

View from Interior View from Exterior

Thermal Performance Indicators

Assembly 1D (Nominal) R-Value	R_{1D}	R-3.3 (0.58 RSI) + exterior insulation
Transmittance / Resistance	U, R	U- and R-values for overall assembly
Linear Transmittance	ψ	Incremental increase in transmittance per linear length of slab

Nominal (1D) vs. Assembly Performance Indicators

Assembly – Without Fiberglass Batt Insulation in Stud Cavity

Exterior Insulation 1D R-Value (RSI)	R_{1D} ft²·hr·°F / Btu (m² K / W)	24" Vertical Clip Spacing		30" Vertical Clip Spacing		36" Vertical Clip Spacing		42" Vertical Clip Spacing		ψ Btu/ft hr °F (W/m K)
		R ft²·hr·°F / Btu (m² K / W)	U Btu/ft² ·hr ·°F (W/m² K)	R ft²·hr·°F / Btu (m² K / W)	U Btu/ft² ·hr ·°F (W/m² K)	R ft²·hr·°F / Btu (m² K / W)	U Btu/ft² ·hr ·°F (W/m² K)	R ft²·hr·°F / Btu (m² K / W)	U Btu/ft² ·hr ·°F (W/m² K)	
R-12.6 (2.22)	R-15.8 (2.78)	R-13.0 (2.27)	0.077 (0.44)	R-13.2 (2.33)	0.076 (0.43)	R-13.5 (2.38)	0.074 (0.42)	R-13.7 (2.41)	0.073 (0.42)	0.042 (0.073)
R-16.8 (3.00)	R-20.0 (3.52)	R-15.4 (2.71)	0.065 (0.37)	R-15.9 (2.81)	0.063 (0.36)	R-16.4 (2.89)	0.061 (0.35)	R-16.7 (2.95)	0.060 (0.34)	0.041 (0.071)
R-21.0 (3.70)	R-24.4 (4.30)	R-17.5 (3.10)	0.057 (0.32)	R-18.5 (3.25)	0.054 (0.31)	R-18.9 (3.36)	0.053 (0.30)	R-19.6 (3.44)	0.051 (0.29)	0.040 (0.068)
R-25.2 (4.40)	R-28.4 (5.00)	R-19.2 (3.41)	0.052 (0.29)	R-20.4 (3.60)	0.049 (0.28)	R-21.3 (3.75)	0.047 (0.27)	R-21.7 (3.86)	0.046 (0.26)	0.042 (0.072)

Detail 5.2.24

Exterior and Interior Insulated 3 5/8″ x 1 5/8″ Steel Stud (16″ o.c) Wall Assembly with Horizontal Z-Girts (24″ o.c.) Supporting Metal Cladding – Structural Steel Framed Floor Intersection

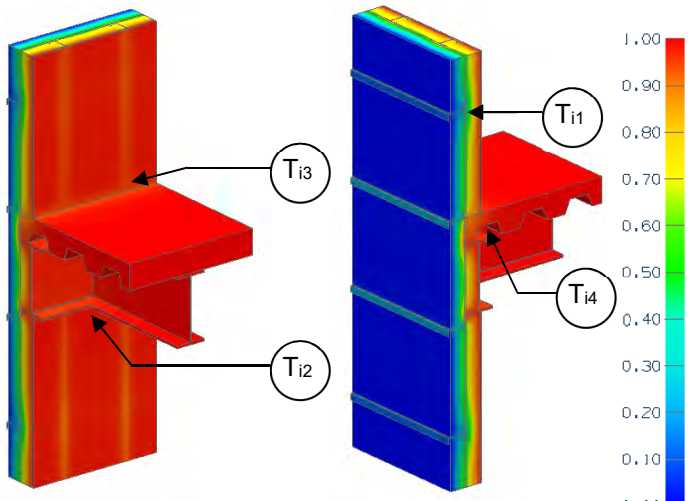

View from Interior View from Exterior

Thermal Performance Indicators

Assembly 1D (Nominal) R-Value	R_{1D}	R- 14.2 (2.50 RSI) + Exterior Insulation
Transmittance / Resistance without Anomaly	U_o, R_o	"clear wall" U- and R-value, without slab and I-Beam
Transmittance / Resistance	U, R	U- and R-values for overall assembly
Surface Temperature Index[1]	T_i	0 = exterior temperature 1 = interior temperature
Linear Transmittance	ψ	Incremental increase in transmittance per linear length of the slab and I-Beam

[1]Assumptions and limitations for surface temperatures identified in ASHRAE 1365-RP

Nominal (1D) vs. Assembly Performance Indicators

Exterior Insulation 1D R-Value (RSI)	R_{1D} ft²·hr·°F / Btu (m² K / W)	R_o ft²·hr·°F / Btu (m² K / W)	U_o Btu/ft² ·hr ·°F (W/m² K)	R ft²·hr·°F / Btu (m² K / W)	U Btu/ft² ·hr ·°F (W/m² K)	ψ Btu/ft hr °F (W/m K)
R-0 (0)	R-14.2 (2.50)	R-9.2 (1.62)	0.109 (0.62)	R-5.9 (1.04)	0.170 (0.96)	0.487 (0.842)
R-5 (0.88)	R-19.2 (3.38)	R-13.4 (2.36)	0.075 (0.42)	R-10.3 (1.82)	0.097 (0.55)	0.177 (0.306)
R-10 (1.76)	R-24.2 (4.26)	R-16.3 (2.87)	0.061 (0.35)	R-13.1 (2.30)	0.077 (0.44)	0.121 (0.210)
R-15 (2.64)	R-29.2 (5.14)	R-18.5 (3.25)	0.054 (0.31)	R-15.2 (2.68)	0.066 (0.37)	0.093 (0.162)
R-20 (3.52)	R-34.2 (6.02)	R-20.5 (3.61)	0.049 (0.28)	R-17.1 (3.00)	0.059 (0.33)	0.079 (0.137)
R-25 (4.40)	R-39.2 (6.90)	R-22.1 (3.90)	0.045 (0.26)	R-18.7 (3.28)	0.054 (0.30)	0.067 (0.117)

Temperature Indices

	R5	R10	R15	R20	R25	
T_{i1}	0.21	0.28	0.33	0.36	0.39	Min T on sheathing, along girt between studs, away from slab
T_{i2}	0.89	0.92	0.94	0.95	0.95	Max T on sheathing, at I-Beam intersection
T_{i3}	0.89	0.91	0.93	0.93	0.94	Min T on floor, at gypsum and steel studs
T_{i4}	0.94	0.96	0.96	0.97	0.97	Min T on ceiling, at corrugated sheet, away from I-Beam

Detail 5.2.25

Interior Insulated 3 5/8″ x 1 5/8″ Steel Stud (16″ o.c) Wall Assembly with Horizontal Z-Girts (24″ o.c.) Supporting Metal Cladding – Structural Steel Framed Floor Intersection

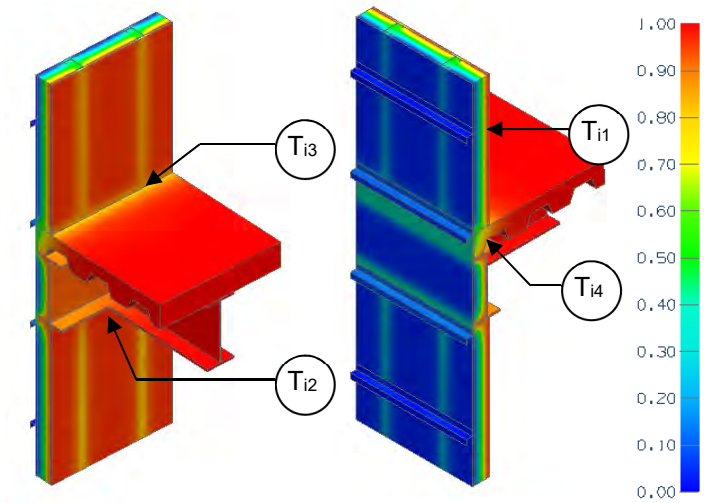

View from Interior View from Exterior

Thermal Performance Indicators

Assembly 1D (Nominal) R-Value	R_{1D}	R- 14.2 (2.50 RSI) + exterior insulation
Transmittance / Resistance without Anomaly	U_o, R_o	"clear wall" U- and R-value, without slab and I-Beam
Transmittance / Resistance	U, R	U- and R-values for overall assembly
Surface Temperature Index[1]	T_i	0 = exterior temperature 1 = interior temperature
Linear Transmittance	ψ	Incremental increase in transmittance per linear length of the slab and I-Beam

[1]Assumptions and limitations for surface temperatures identified in ASHRAE 1365-RP

Nominal (1D) vs. Assembly Performance Indicators

Exterior Insulation 1D R-Value (RSI)	R_{1D} ft²·hr·°F / Btu (m² K / W)	R_o ft²·hr·°F / Btu (m² K / W)	U_o Btu/ft² ·hr ·°F (W/m² K)	R ft²·hr·°F / Btu (m² K / W)	U Btu/ft² ·hr ·°F (W/m² K)	ψ Btu/ft hr °F (W/m K)
R-0 (0)	R-14.2 (2.50)	R-9.2 (1.62)	0.109 (0.62)	5.9 (1.04)	0.170 (0.96)	0.487 (0.842)

Temperature Indices

T_{i1}	0.07	Min T on sheathing, along girt between studs, away from slab
T_{i2}	0.71	Max T on sheathing, at I-Beam intersection
T_{i3}	0.79	Min T on floor, at gypsum and steel studs
T_{i4}	0.81	Min T on ceiling, at corrugated steel, away from I-Beam

Detail 5.2.26

Exterior and Interior Insulated Wall Assembly with Shelf Angle & Brick Ties Supporting Brick Veneer – Intermediate Floor Intersection

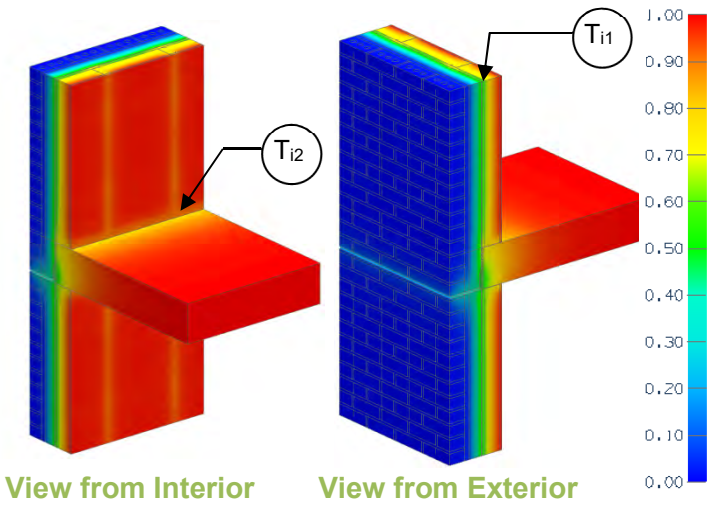

Thermal Performance Indicators

Assembly 1D (Nominal) R-Value	R_{1D}	R-15.3 (2.70 RSI) + exterior insulation
Transmittance / Resistance without Anomaly	U_o, R_o	"clear wall" U- and R-value without slab and shelf angle
Transmittance / Resistance	U, R	U- and R-values for overall assembly
Surface Temperature Index[1]	T_i	0 = exterior temperature 1 = interior temperature
Linear Transmittance	ψ	Incremental increase in transmittance per linear length of shelf angle and slab

[1]Assumptions and limitations for surface temperatures identified in ASHRAE 1365-RP

Nominal (1D) vs. Assembly Performance Indicators

Exterior Insulation 1D R-Value (RSI)	R_{1D} ft²·hr·°F / Btu (m² K / W)	R_o ft²·hr·°F / Btu (m² K / W)	U_o Btu/ft² ·hr ·°F (W/m² K)	R ft²·hr·°F / Btu (m² K / W)	U Btu/ft² ·hr ·°F (W/m² K)	ψ Btu/ft hr °F (W/m K)
R-5 (0.88)	R-20.3 (3.58)	R-13.9 (2.45)	0.072 (0.41)	R-8.7 (1.53)	0.115 (0.65)	0.268 (0.464)
R-10 (1.76)	R-25.3 (4.46)	R-17.1 (3.00)	0.059 (0.33)	R-9.3 (1.63)	0.108 (0.61)	0.305 (0.528)
R-15 (2.64)	R-30.3 (5.34)	R-19.8 (3.48)	0.051 (0.29)	R-9.9 (1.74)	0.101 (0.58)	0.314 (0.544)
R-20 (3.52)	R-35.3 (6.22)	R-22.4 (3.95)	0.045 (0.25)	R-10.9 (1.92)	0.092 (0.52)	0.291 (0.504)
R-25 (4.40)	R-40.3 (7.10)	R-24.9 (4.39)	0.040 (0.23)	R-11.6 (2.04)	0.086 (0.49)	0.286 (0.496)

Temperature Indices

	R5	R15	R25	
T_{i1}	0.39	0.59	0.66	Min T on sheathing cavity centre away from slab
T_{i2}	0.66	0.71	0.77	Max T on sheathing, at slab, at steel studs

Detail 5.2.27

Exterior and Interior Insulated Wall Assembly with Spaced Shelf Angle & Brick Ties Supporting Brick Veneer – Intermediate Floor Intersection

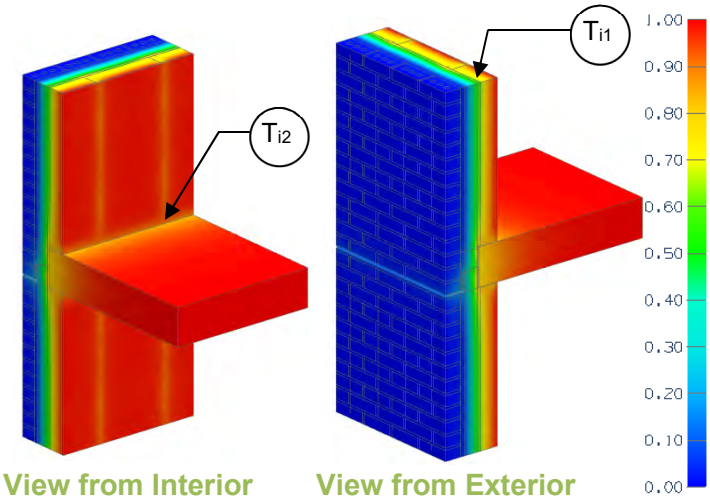

Thermal Performance Indicators

Assembly 1D (Nominal) R-Value	R_{1D}	R-15.3 (2.70 RSI) + exterior insulation
Transmittance / Resistance without Anomaly	U_o, R_o	"clear wall" U- and R-value without slab and shelf angle
Transmittance / Resistance	U, R	U- and R-values for overall assembly
Surface Temperature Index[1]	T_i	0 = exterior temperature 1 = interior temperature
Linear Transmittance	ψ	Incremental increase in transmittance per linear length of shelf angle and slab

[1]Assumptions and limitations for surface temperatures identified in ASHRAE 1365-RP

Nominal (1D) vs. Assembly Performance Indicators

Exterior Insulation 1D R-Value (RSI)	R_{1D} ft²·hr·°F / Btu (m² K / W)	R_o ft²·hr·°F / Btu (m² K / W)	U_o Btu/ft² ·hr ·°F (W/m² K)	R ft²·hr·°F / Btu (m² K / W)	U Btu/ft² ·hr ·°F (W/m² K)	ψ Btu/ft hr °F (W/m K)
R-5 (0.88)	R-20.3 (3.58)	R-13.9 (2.45)	0.072 (0.41)	R-9.4 (1.65)	0.072 (0.61)	0.217 (0.376)
R-10 (1.76)	R-25.3 (4.46)	R-17.1 (3.00)	0.059 (0.33)	R-11.1 (1.95)	0.059 (0.51)	0.197 (0.341)
R-15 (2.64)	R-30.3 (5.34)	R-19.8 (3.48)	0.051 (0.29)	R-12.6 (2.17)	0.051 (0.46)	0.189 (0.326)
R-20 (3.52)	R-35.3 (6.22)	R-22.4 (3.95)	0.045 (0.25)	R-13.8 (2.43)	0.045 (0.41)	0.174 (0.301)
R-25 (4.40)	R-40.3 (7.10)	R-24.9 (4.39)	0.040 (0.23)	R-15.0 (2.64)	0.040 (0.38)	0.165 (0.290)

Temperature Indices

	R5	R15	R25	
T_{i1}	0.39	0.59	0.69	Min T on sheathing, cavity centre away from slab
T_{i2}	0.72	0.79	0.83	Max T on sheathing, at slab, at steel studs

Detail 5.2.28

Exterior and Interior Insulated Wall Assembly with Stainless Steel Shelf Angle & Brick Ties Supporting Brick Veneer – Intermediate Floor Intersection

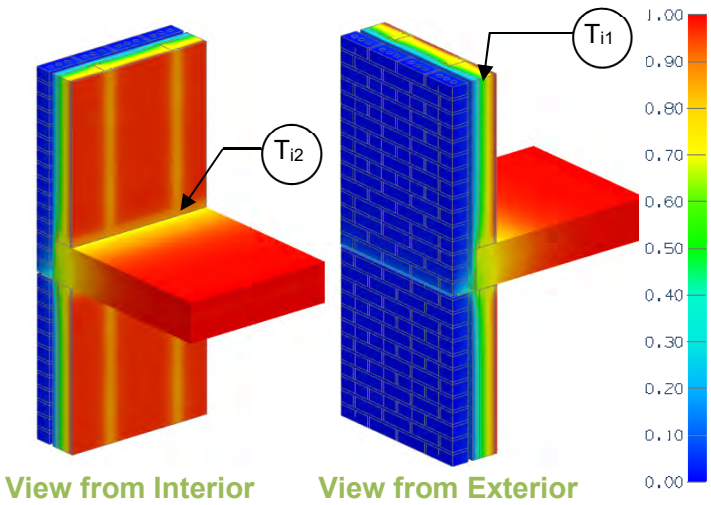

Thermal Performance Indicators

Assembly 1D (Nominal) R-Value	R_{1D}	R-15.3 (2.70 RSI) + exterior insulation
Transmittance / Resistance without Anomaly	U_o, R_o	"clear wall" U- and R-value without slab and shelf angle
Transmittance / Resistance	U, R	U- and R-values for overall assembly
Surface Temperature Index[1]	T_i	0 = exterior temperature 1 = interior temperature
Linear Transmittance	ψ	Incremental increase in transmittance per linear length of shelf angle and slab

[1]Assumptions and limitations for surface temperatures identified in ASHRAE 1365-RP

Nominal (1D) vs. Assembly Performance Indicators

Exterior Insulation 1D R-Value (RSI)	R_{1D} ft²·hr·°F / Btu (m² K / W)	R_o ft²·hr·°F / Btu (m² K / W)	U_o Btu/ft² ·hr ·°F (W/m² K)	R ft²·hr·°F / Btu (m² K / W)	U Btu/ft² ·hr ·°F (W/m² K)	ψ Btu/ft hr °F (W/m K)
R-5 (0.88)	R-20.3 (3.58)	R-13.9 (2.45)	0.072 (0.41)	R-9.0 (1.59)	0.111 (0.63)	0.242 (0.419)
R-10 (1.76)	R-25.3 (4.46)	R-17.1 (3.00)	0.059 (0.33)	R-10.0 (1.76)	0.100 (0.57)	0.256 (0.443)
R-15 (2.64)	R-30.3 (5.34)	R-19.8 (3.48)	0.051 (0.29)	R-11.0 (1.93)	0.091 (0.52)	0.251 (0.434)
R-20 (3.52)	R-35.3 (6.22)	R-22.4 (3.95)	0.045 (0.25)	R-12.2 (2.15)	0.082 (0.46)	0.231 (0.399)
R-25 (4.40)	R-40.3 (7.10)	R-24.9 (4.39)	0.040 (0.23)	R-13.2 (2.32)	0.076 (0.43)	0.221 (0.383)

Temperature Indices

	R5	R15	R25	
T_{i1}	0.39	0.59	0.69	Min T on sheathing cavity centre away from slab
T_{i2}	0.68	0.73	0.78	Max T on sheathing, at slab, at steel studs

Detail 5.2.29

Exterior and Interior Insulated Wall Assembly with Thermally Broken Steel Shelf Angle & Brick Ties Supporting Brick Veneer – Slab Intersection

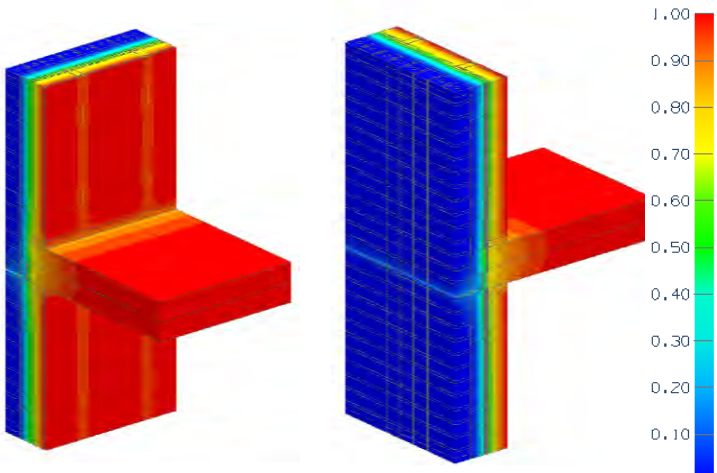

View from Interior View from Exterior

Thermal Performance Indicators

Assembly 1D (Nominal) R-Value	R_{1D}	R-15.3 (2.70 RSI) + exterior insulation
Transmittance / Resistance without Anomaly	U_o, R_o	"clear wall" U- and R-value without slab and shelf angle
Transmittance / Resistance	U, R	U- and R-values for overall assembly
Surface Temperature Index	T_i	0 = exterior temperature 1 = interior temperature
Linear Transmittance	ψ	Incremental increase in transmittance per linear length of slab with shelf angle

[1]Assumptions and limitations for surface temperatures identified in ASHRAE 1365-RP

Scenario

Scenario	Flashing and Shelf Angle
1	Metal Flashing with Steel Shelf Angle and Bolts
2	Self-Adhered Membrane Flashing with Steel Shelf Angle and Bolts

Nominal (1D) vs. Assembly Performance Indicators

Scenario	Exterior Insulation 1D R-Value (RSI)	R_{1D} ft²·hr·°F / Btu (m² K / W)	R_o ft²·hr·°F / Btu (m² K / W)	U_o Btu/ft² ·hr ·°F (W/m² K)	R ft²·hr·°F / Btu (m² K / W)	U Btu/ft² ·hr ·°F (W/m² K)	ψ Btu/ft hr °F (W/m K)
1	R-15 (2.64)	R-30.3 (5.34)	R-19.8 (3.48)	0.051 (0.29)	R-11.3 (1.98)	0.089 (0.50)	0.237 (0.410)
2	R-15 (2.64)	R-30.3 (5.34)	R-19.8 (3.48)	0.051 (0.29)	R-13.8 (2.43)	0.072 (0.41)	0.135 (0.234)

Detail 5.2.30

Exterior Insulated 3 5/8" x 1 5/8" Steel Stud Wall Assembly with Horizontal Z-girts Supporting Metal Cladding – Armatherm 500 Thermally Broken Slab Projection with Insulated Curb

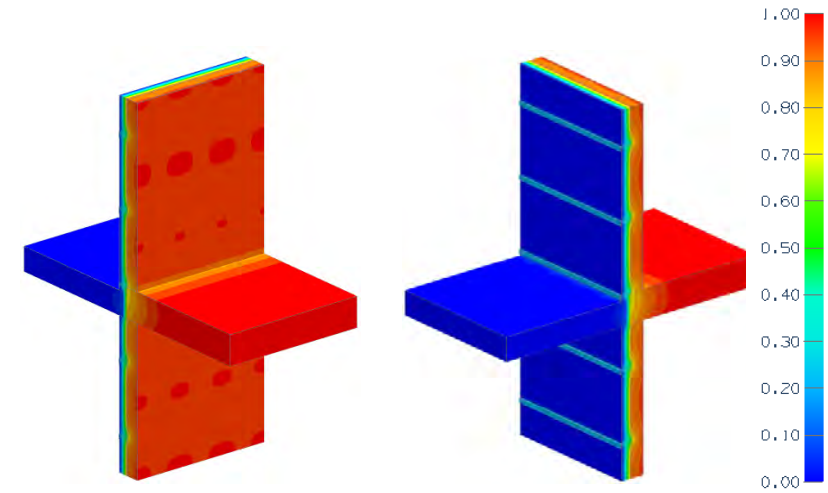

View from Interior View from Exterior

Thermal Performance Indicators

Assembly 1D (Nominal) R-Value	R_{1D}	R-3.2 (0.56 RSI) + insulation
Transmittance / Resistance without Anomaly	U_o, R_o	"clear field" U- and R-value, without slab
Transmittance / Resistance	U, R	U- and R-values for overall assembly
Surface Temperature Index[1]	T_i	0 = exterior temperature 1 = interior temperature
Linear Transmittance	ψ	Incremental increase in transmittance per linear length of slab

[1]Surface temperatures are a result of steady-state conductive heat flow with constant heat transfer coefficients. Limitations are identified in final report

Scenarios

Scenario	Thermal Break	Rebar Type
A	Armatherm 500-280	Carbon Steel
B	Armatherm 500-280	Stainless Steel
C	Armatherm 500-080	Carbon Steel
D	Armatherm 500-080	Stainless Steel

Nominal (1D) vs. Assembly Performance Indicators

Base Assembly

Exterior Insulation 1D R-Value (RSI)	R_{1D} ft²·hr·°F / Btu (m² K / W)	R_o ft²·hr·°F / Btu (m² K / W)	U_o Btu/ft² ·hr ·°F (W/m² K)
R-14.7 (2.59)	R-17.9 (3.15)	R-11.2 (1.97)	0.089 (0.51)

Slab Linear Transmittance

Scenario	R ft²·hr·°F / Btu (m² K / W)	U Btu/ft² ·hr ·°F (W/m² K)	ψ Btu/ft hr °F (W/m K)
A	R-9.1 (1.60)	0.110 (0.63)	0.210 (0.363)
B	R-9.6 (1.69)	0.104 (0.59)	0.147 (0.254)
C	R-9.4 (1.65)	0.107 (0.61)	0.173 (0.299)
D	R-10.0 (1.77)	0.100 (0.57)	0.102 (0.176)

Detail 5.2.31

Exterior Insulated 3 5/8" x 1 5/8" Steel Stud Wall Assembly with Armatherm Z-girts Supporting Metal Cladding – Armatherm 500-080 Thermally Broken Slab Projection with Insulated Curb

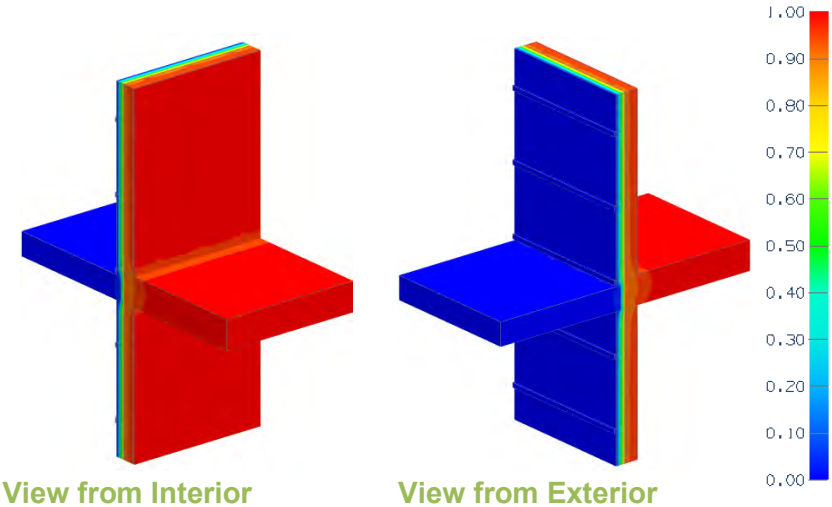

View from Interior View from Exterior

Thermal Performance Indicators

Assembly 1D (Nominal) R-Value	R_{1D}	R-3.2 (0.56 RSI) + insulation
Transmittance / Resistance without Anomaly	U_o, R_o	"clear field" U- and R-value, without roof anchor
Transmittance / Resistance	U, R	U- and R-values for overall assembly
Surface Temperature Index[1]	T_i	0 = exterior temperature 1 = interior temperature
Linear Transmittance	ψ	Incremental increase in transmittance per linear length of slap

[1]Surface temperatures are a result of steady-state conductive heat flow with constant heat transfer coefficients. Limitations are identified in final report

Nominal (1D) vs. Assembly Performance Indicators

Base Assembly

Exterior Insulation 1D R-Value (RSI)	R_{1D} ft²·hr·°F / Btu (m² K / W)	R_o ft²·hr·°F / Btu (m² K / W)	U_o Btu/ft² ·hr ·°F (W/m² K)
R-14.7 (2.59)	R-17.9 (3.15)	R-17.3 (3.050)	0.058 (0.33)

Slab Linear Transmittance

R ft²·hr·°F / Btu (m² K / W)	U Btu/ft² ·hr ·°F (W/m² K)	ψ Btu/ft hr °F (W/m K)
R-14.6 (2.57)	0.068 (0.39)	0.107 (0.185)

Detail 5.2.32

Exterior and Interior Insulated 3 5/8" x 1 5/8" Steel Stud (16" o.c.) Wall Assembly with Nvelope – Eko Thermobracket and NV1 Clip System Supporting Cladding – Intermediate Floor Intersection

View from Interior

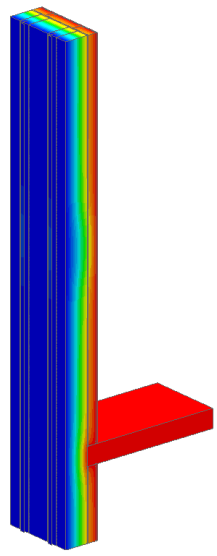

View from Exterior

Thermal Performance Indicators

Assembly 1D (Nominal) R-Value	R_{1D}	R-15.3 (2.52 RSI) + exterior insulation
Transmittance / Resistance	U_o, R_o	"clear wall" U- and R-value without slab
Transmittance / Resistance	U, R	U and R-values for overall assembly
Surface Temperature Index[1]	T_i	0 = exterior temperature 1 = interior temperature
Linear Transmittance	ψ	Incremental increase in transmittance per linear length of floor slab

[1]Assumptions and limitations for surface temperatures identified in ASHRAE 1365-RP

Nominal (1D) vs. Assembly Performance Indicators

Base Assembly – Wall

Floor Height ft (mm)	Exterior Insulation 1D R-value (RSI)	R_{1D} ft²·hr·°F / Btu (m² K / W)	R_o ft²·hr·°F / Btu (m² K / W)	U_o Btu/ft² ·hr ·°F (W/m² K)
11' (3353)	R-42 (7.40)	R-57.3 (10.09)	R-35.6 (6.27)	0.028 (0.16)
13.5' (4115)	R-42 (7.40)	R-57.3 (10.09)	R-37.3 (6.57)	0.027 (0.15)
16' (4877)	R-42 (7.40)	R-57.3 (10.09)	R-38.6 (6.80)	0.026 (0.15)

Uninsulated Floor Intersection Linear Transmittance

Floor Height ft (mm)	Exterior Insulation 1D R-value (RSI)	R ft²·hr·°F / Btu (m² K / W)	U Btu/ft² ·hr ·°F (W/m² K)	ψ Btu/ft ·hr ·°F (W/m K)
11' (3353)	R-42 (7.40)	R-35.0 (6.17)	0.029 (0.16)	0.005 (0.009)
13.5' (4115)	R-42 (7.40)	R-36.8 (6.48)	0.027 (0.15)	
16' (4877)	R-42 (7.40)	R-38.2 (6.72)	0.026 (0.15)	

Insulated Floor Intersection Linear Transmittance

Floor Height ft (mm)	Exterior Insulation 1D R-value (RSI)	R ft²·hr·°F / Btu (m² K / W)	U Btu/ft² ·hr ·°F (W/m² K)	ψ Btu/ft ·hr ·°F (W/m K)
11' (3353)	R-42 (7.40)	R-35.2 (6.19)	0.028 (0.16)	0.004 (0.006)
13.5' (4115)	R-42 (7.40)	R-36.9 (6.51)	0.027 (0.15)	
16' (4877)	R-42 (7.40)	R-38.3 (6.74)	0.026 (0.15)	

Detail 5.2.33

Exterior Insulated 3 5/8" x 1 5/8" Steel Stud (16" o.c.) Wall Assembly with FERO Slotted Rap Ties (24" o.c.) Supporting Brick Veneer – Intermediate Floor Intersection

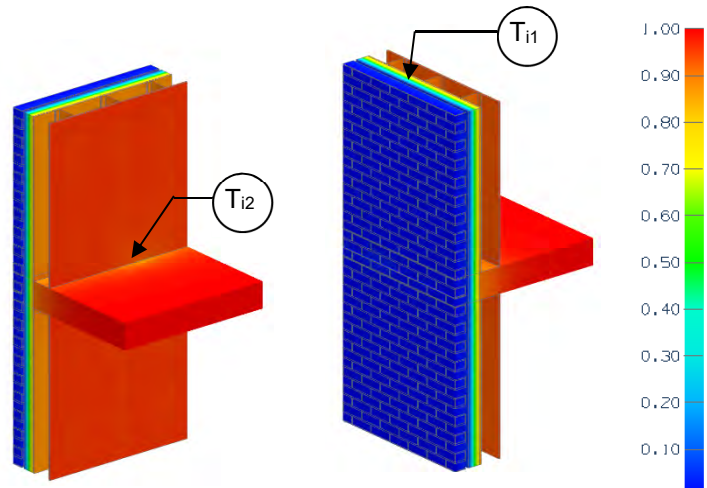

View from Interior View from Exterior

Thermal Performance Indicators

Assembly 1D (Nominal) R-Value	R_{1D}	R-4.3 (0.76 RSI) + exterior insulation
Transmittance / Resistance without Anomaly	U_o, R_o	"clear wall" U- and R-value without slab and shelf angle
Transmittance / Resistance	U, R	U- and R-values for overall assembly
Surface Temperature Index[1]	T_i	0 = exterior temperature 1 = interior temperature
Linear Transmittance	ψ	Incremental increase in transmittance per linear length of slab with shelf angle

Scenario

Scenario	Shelf Angle
1	Direct Anchor Shelf Angle
2	FERO FAST Thermal Bracket System
3	FERO FAST Thermal Bracket with Aerogel Coating

Nominal (1D) vs. Assembly Performance Indicators

Scenario	Exterior Insulation 1D R-Value (RSI)	R_{1D} ft²·hr·°F / Btu (m² K / W)	R_o ft²·hr·°F / Btu (m² K / W)	U_o Btu/ft² ·hr ·°F (W/m² K)	R ft²·hr·°F / Btu (m² K / W)	U Btu/ft² ·hr ·°F (W/m² K)	ψ Btu/ft hr °F (W/m K)
1	R-16.8 (2.96)	R-21.1 (3.72)	R-18.6 (3.28)	0.054 (0.305)	R-10.8 (1.90)	0.093 (0.525)	0.337 (0.583)
	R-24.0 (4.23)	R-28.3 (4.98)	R-24.1 (4.25)	0.041 (0.235)	R-12.2 (2.15)	0.082 (0.466)	0.351 (0.608)
2	R-16.8 (2.96)	R-21.1 (3.72)	R-18.6 (3.28)	0.054 (0.305)	R-16.7 (2.94)	0.060 (0.341)	0.055 (0.095)
	R-24.0 (4.23)	R-28.3 (4.98)	R-24.1 (4.25)	0.041 (0.235)	R-20.8 (3.67)	0.048 (0.272)	0.056 (0.098)
3	R-16.8 (2.96)	R-21.1 (3.72)	R-18.6 (3.28)	0.054 (0.305)	R-17.1 (3.01)	0.059 (0.333)	0.043 (0.074)
	R-24.0 (4.23)	R-28.3 (4.98)	R-24.1 (4.25)	0.041 (0.235)	R-21.5 (3.79)	0.046 (0.264)	0.043 (0.075)

Temperature Indices

	1		2		3		
	R16.8	R24	R16.8	R24	R16.8	R24	
T_{i1}	0.89	0.91	0.89	0.92	0.89	0.92	Max T on sheathing cavity centre away from slab
T_{i2}	0.67	0.68	0.81	0.82	0.83	0.85	Min T on sheathing, at slab, between steel studs at track

Detail 5.2.34

Owens Corning Exterior Insulated 6'' x 1 5/8" Steel Stud (16'' o.c.) Wall Assembly with Thermally Isolated Vertical Brackets and Rail System (24" o.c.) Supporting Metal Cladding – Intermediate Floor Intersection

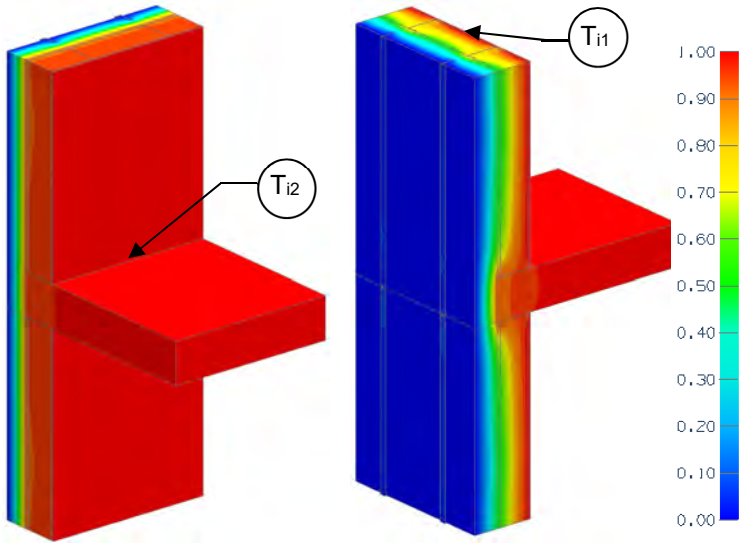

View from Interior View from Exterior

Thermal Performance Indicators

Assembly 1D (Nominal) R-Value	R_{1D}	R-3.3 (0.58 RSI) + exterior insulation
Transmittance / Resistance without Anomaly	U_o, R_o	"clear wall" U- and R-value without slab and shelf angle
Transmittance / Resistance	U, R	U- and R-values for overall assembly
Surface Temperature Index[1]	T_i	0 = exterior temperature 1 = interior temperature
Linear Transmittance	ψ	Incremental increase in transmittance per linear length of slab

[1]Assumptions and limitations for surface temperatures identified in ASHRAE 1365-RP

Nominal (1D) vs. Assembly Performance Indicators

Exterior Insulation 1D R-Value (RSI)	R_{1D} ft²·hr·°F / Btu (m² K / W)	R_o ft²·hr·°F / Btu (m² K / W)	U_o Btu/ft² ·hr ·°F (W/m² K)	R ft²·hr·°F / Btu (m² K / W)	U Btu/ft² ·hr ·°F (W/m² K)	ψ Btu/ft hr °F (W/m K)
R-8.4 (1.48)	R-11.7 (2.06)	R-10.0 (1.77)	0.100 (0.57)	R-9.7 (1.72)	0.103 (0.58)	0.020 (0.034)
R-21.0 (3.70)	R-24.3 (4.28)	R-17.6 (3.10)	0.057 (0.32)	R-17.0 (3.00)	0.059 (0.33)	0.013 (0.023)

Temperature Indices

	R8.4	R21	
T_{i1}	0.80	0.89	Min T on sheathing cavity centre, away from slab
T_{i2}	0.84	0.91	Max T on sheathing, at slab, between steel studs

Detail 5.2.35

Exterior and Interior Insulated 6'' x 1 5/8" Steel Stud (16'' o.c.) Wall Assembly with Thermally Isolated Vertical Brackets and Rail System (24" o.c.) Supporting Metal Cladding and Owens Corning R-20 Batt in Stud Cavity – Intermediate Floor Intersection

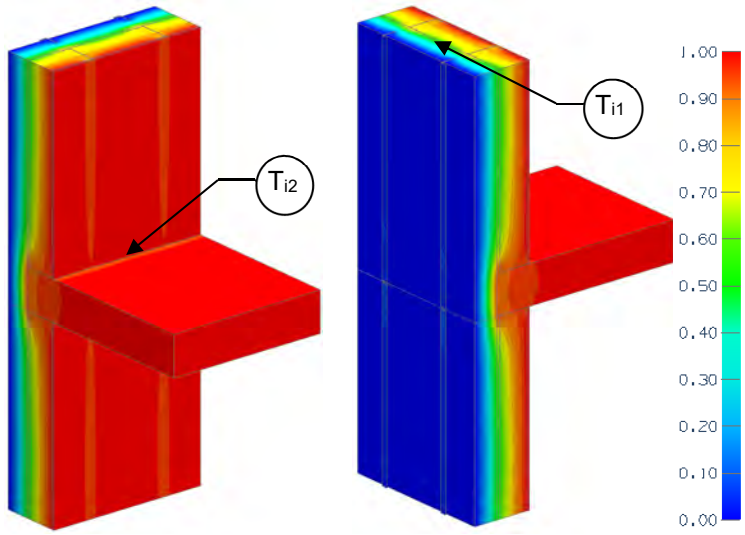

View from Interior View from Exterior

Thermal Performance Indicators

Assembly 1D (Nominal) R-Value	R_{1D}	R-22.4 (3.94 RSI) + exterior insulation
Transmittance / Resistance without Anomaly	U_o, R_o	"clear wall" U- and R-value without slab and shelf angle
Transmittance / Resistance	U, R	U- and R-values for overall assembly
Surface Temperature Index[1]	T_i	0 = exterior temperature 1 = interior temperature
Linear Transmittance	ψ	Incremental increase in transmittance per linear length of slab

[1]Assumptions and limitations for surface temperatures identified in ASHRAE 1365-RP

Nominal (1D) vs. Assembly Performance Indicators

Exterior Insulation 1D R-Value (RSI)	R_{1D} ft²·hr·°F / Btu (m² K / W)	R_o ft²·hr·°F / Btu (m² K / W)	U_o Btu/ft² ·hr ·°F (W/m² K)	R ft²·hr·°F / Btu (m² K / W)	U Btu/ft² ·hr ·°F (W/m² K)	ψ Btu/ft hr °F (W/m K)
R-8.4 (1.48)	R-30.8 (5.42)	R-18.3 (3.23)	0.055 (0.31)	R-15.3 (2.69)	0.065 (0.37)	0.076 (0.132)
R-21.0 (3.70)	R-43.4 (7.64)	R-25.8 (4.54)	0.039 (0.22)	R-22.5 (3.96)	0.045 (0.25)	0.040 (0.069)

Temperature Indices

	R8.4	R21	
T_{i1}	0.35	0.55	Min T on sheathing cavity centre, away from slab
T_{i2}	0.80	0.88	Max T on sheathing, at slab, between steel studs

Detail 5.2.36

Exterior and Interior Insulated 6'' x 1 5/8" Steel Stud (16'' o.c.) Wall Assembly with Thermally Isolated Vertical Brackets and Rail System (24" o.c.) Supporting Metal Cladding and Owens Corning R-22.5 Batt in Stud Cavity – Intermediate Floor Intersection

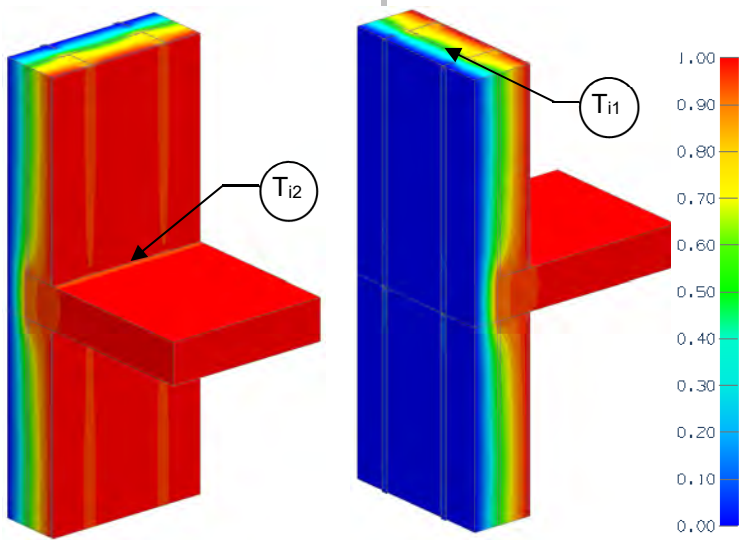

View from Interior View from Exterior

Thermal Performance Indicators

Assembly 1D (Nominal) R-Value	R_{1D}	R-24.9 (4.38 RSI) + exterior insulation
Transmittance / Resistance without Anomaly	U_o, R_o	"clear wall" U- and R-value without slab and shelf angle
Transmittance / Resistance	U, R	U- and R-values for overall assembly
Surface Temperature Index[1]	T_i	0 = exterior temperature 1 = interior temperature
Linear Transmittance	ψ	Incremental increase in transmittance per linear length of slab

[1]Assumptions and limitations for surface temperatures identified in ASHRAE 1365-RP

Nominal (1D) vs. Assembly Performance Indicators

Exterior Insulation 1D R-Value (RSI)	R_{1D} ft²·hr·°F / Btu (m² K / W)	R_o ft²·hr·°F / Btu (m² K / W)	U_o Btu/ft² ·hr ·°F (W/m² K)	R ft²·hr·°F / Btu (m² K / W)	U Btu/ft² ·hr ·°F (W/m² K)	ψ Btu/ft hr °F (W/m K)
R-8.4 (1.48)	R-33.3 (5.86)	R-19.0 (3.34)	0.053 (0.30)	R-15.6 (2.75)	0.064 (0.36)	0.079 (0.136)
R-21.0 (3.70)	R-45.9 (8.08)	R-26.4 (4.64)	0.038 (0.22)	R-22.8 (4.02)	0.044 (0.25)	0.041 (0.071)

Temperature Indices

	R8.4	R21	
T_{i1}	0.33	0.53	Min T on sheathing cavity centre, away from slab
T_{i2}	0.80	0.87	Max T on sheathing, at slab, between steel studs

Detail 5.2.37

Exterior and Interior Insulated 6'' x 1 5/8'' Steel Stud (16'' o.c.) Wall Assembly with Thermally Isolated Vertical Brackets and Rail System (24'' o.c.) Supporting Metal Cladding and Owens Corning R-24 Batt in Stud Cavity – Intermediate Floor Intersection

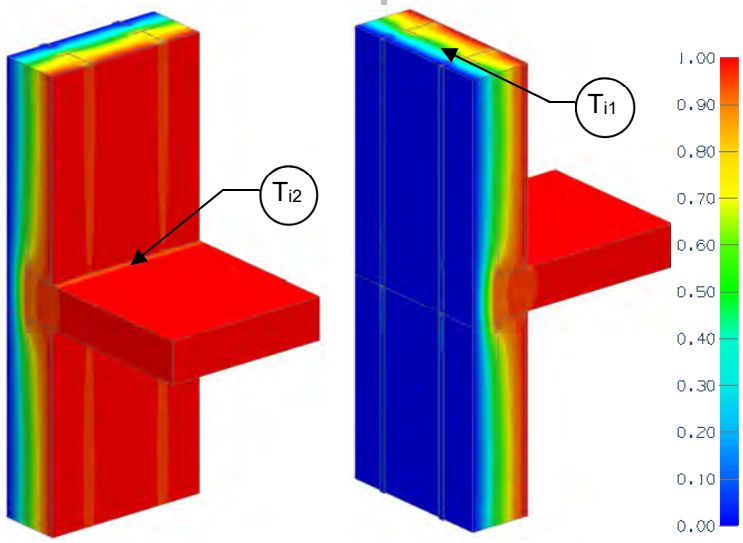

View from Interior View from Exterior

Thermal Performance Indicators

Assembly 1D (Nominal) R-Value	R_{1D}	R-26.4 (4.65 RSI) + exterior insulation
Transmittance / Resistance without Anomaly	U_o, R_o	"clear wall" U- and R-value without slab and shelf angle
Transmittance / Resistance	U, R	U- and R-values for overall assembly
Surface Temperature Index[1]	T_i	0 = exterior temperature 1 = interior temperature
Linear Transmittance	ψ	Incremental increase in transmittance per linear length of slab

[1]Assumptions and limitations for surface temperatures identified in ASHRAE 1365-RP

Nominal (1D) vs. Assembly Performance Indicators

Exterior Insulation 1D R-Value (RSI)	R_{1D} ft²·hr·°F / Btu (m² K / W)	R_o ft²·hr·°F / Btu (m² K / W)	U_o Btu/ft² ·hr ·°F (W/m² K)	R ft²·hr·°F / Btu (m² K / W)	U Btu/ft² ·hr ·°F (W/m² K)	ψ Btu/ft hr °F (W/m K)
R-8.4 (1.48)	R-34.8 (6.13)	R-19.3 (3.40)	0.052 (0.29)	R-15.8 (2.78)	0.063 (0.36)	0.080 (0.139)
R-21.0 (3.70)	R-47.4 (8.34)	R-26.7 (4.71)	0.037 (0.21)	R-23.0 (4.05)	0.043 (0.25)	0.042 (0.073)

Temperature Indices

	R8.4	R21	
T_{i1}	0.32	0.52	Min T on sheathing cavity centre, away from slab
T_{i2}	0.80	0.87	Max T on sheathing, at slab, between steel studs

Detail 5.2.38

Exterior Insulated 6'' x 1 5/8'' Steel Stud (16'' o.c.) Wall Assembly with FRP Vertical Brackets and Rail System Supporting Metal Cladding – Intermediate Floor Intersection

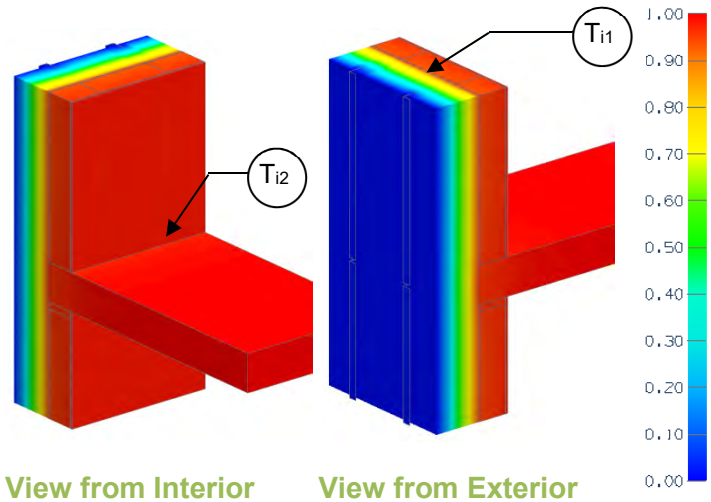

View from Interior View from Exterior

Thermal Performance Indicators

Assembly 1D (Nominal) R-Value	R_{1D}	R-3.2 (0.56 RSI) + exterior insulation
Transmittance / Resistance without Anomaly	U_o, R_o	"clear wall" U- and R-value without slab
Transmittance / Resistance	U, R	U- and R-values for overall assembly
Surface Temperature Index[1]	T_i	0 = exterior temperature 1 = interior temperature
Linear Transmittance	ψ	Incremental increase in transmittance per linear length of slab

[1]Assumptions and limitations for surface temperatures identified in ASHRAE 1365-RP

Nominal (1D) vs. Assembly Performance Indicators

Exterior Insulation 1D R-Value (RSI)	R_{1D} ft²·hr·°F / Btu (m² K / W)	R_o ft²·hr·°F / Btu (m² K / W)	U_o Btu/ft² ·hr ·°F (W/m² K)	R ft²·hr·°F / Btu (m² K / W)	U Btu/ft² ·hr ·°F (W/m² K)	ψ Btu/ft hr °F (W/m K)
R-42 (7.40)	R-45.2 (7.96)	R-40.0 (7.04)	0.025 (0.14)	R-39.5 (6.96)	0.025 (0.14)	0.002 (0.003)

Temperature Indices

	R42	
T_{i1}	0.94	Min T on sheathing cavity centre away from slab
T_{i2}	0.96	Max T on sheathing, at slab, at steel studs

Detail 5.2.39

Exterior and Interior Insulated 6'' x 1 5/8" Steel Stud (16'' o.c.) Wall Assembly with FRP Vertical Brackets and Rail System Supporting Metal Cladding and R-19 Batt in Stud Cavity – Intermediate Floor Intersection

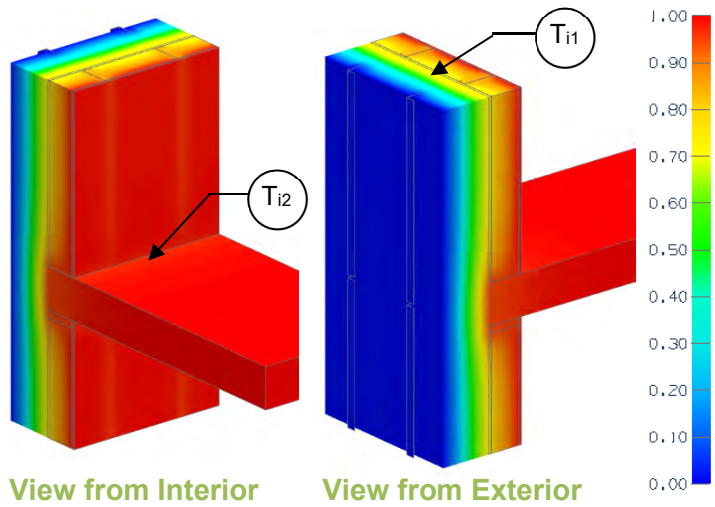

Thermal Performance Indicators

Assembly 1D (Nominal) R-Value	R_{1D}	R-21.3 (3.75 RSI) + exterior insulation
Transmittance / Resistance without Anomaly	U_o, R_o	"clear wall" U- and R-value without slab
Transmittance / Resistance	U, R	U- and R-values for overall assembly
Surface Temperature Index[1]	T_i	0 = exterior temperature 1 = interior temperature
Linear Transmittance	ψ	Incremental increase in transmittance per linear length of slab

[1]Assumptions and limitations for surface temperatures identified in ASHRAE 1365-RP

Nominal (1D) vs. Assembly Performance Indicators

Exterior Insulation 1D R-Value (RSI)	R_{1D} ft²·hr·°F / Btu (m² K / W)	R_o ft²·hr·°F / Btu (m² K / W)	U_o Btu/ft² ·hr ·°F (W/m² K)	R ft²·hr·°F / Btu (m² K / W)	U Btu/ft² ·hr ·°F (W/m² K)	ψ Btu/ft hr °F (W/m K)
R-42 (7.40)	R-63.3 (11.15)	R-48.3 (8.51)	0.021 (0.12)	R-45.0 (7.92)	0.022 (0.13)	0.008 (0.015)

Temperature Indices

	R42	
T_{i1}	0.76	Min T on sheathing cavity centre away from slab
T_{i2}	0.94	Max T on sheathing, at slab, between steel studs

Detail 5.2.40

Exterior Insulated 3 5/8” x 1 5/8” Steel Stud (16” o.c.) Wall Assembly with Horizontal Z-girts (24” o.c.) Supporting Metal Cladding – Isokorb K65-V8 Thermally Broken Slab Projection with Insulated Curb

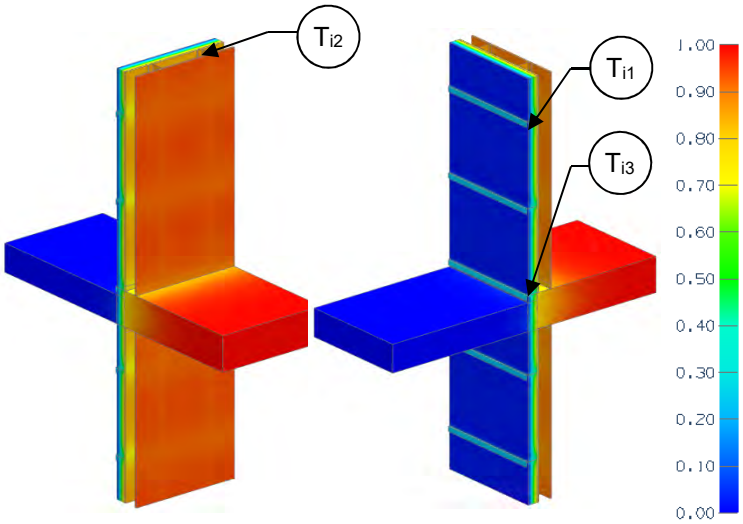

View from Interior View from Exterior

Thermal Performance Indicators

Assembly 1D (Nominal) R-Value	R_{1D}	R-3.2 (0.56 RSI) + exterior insulation
Transmittance / Resistance without Anomaly	U_o, R_o	“clear wall” U- and R-value, without slab
Transmittance / Resistance	U, R	U- and R-values for overall assembly
Surface Temperature Index[1]	T_i	0 = exterior temperature 1 = interior temperature
Linear Transmittance	ψ	Incremental increase in transmittance per linear length of slab

[1]Assumptions and limitations for surface temperatures identified in ASHRAE 1365-RP

Nominal (1D) vs. Assembly Performance Indicators

Exterior Insulation 1D R-Value (RSI)	R_{1D} ft²·hr·°F / Btu (m² K / W)	R_o ft²·hr·°F / Btu (m² K / W)	U_o Btu/ft² ·hr ·°F (W/m² K)	R ft²·hr·°F / Btu (m² K / W)	U Btu/ft² ·hr ·°F (W/m² K)	ψ Btu/ft hr °F (W/m K)
R-15 (2.64)	R-18.2 (3.20)	R-11.3 (1.99)	0.088 (0.50)	R-9.7 (1.71)	0.103 (0.58)	0.143 (0.248)

Temperature Indices

T_{i1}	0.75	Min T on sheathing away from slab, between studs at girts
T_{i2}	0.86	Max T on sheathing away from slab, between girts at studs
T_{i3}	0.78	Min T on slab exposed to interior air, at sheathing between studs

Detail 5.2.41

Exterior Insulated 3 5/8” x 1 5/8” Steel Stud (16” o.c.) Wall Assembly with Horizontal Z-girts (24” o.c.) Supporting Metal Cladding – Isokorb K10-V6 Thermally Broken Slab Projection with Insulated Curb

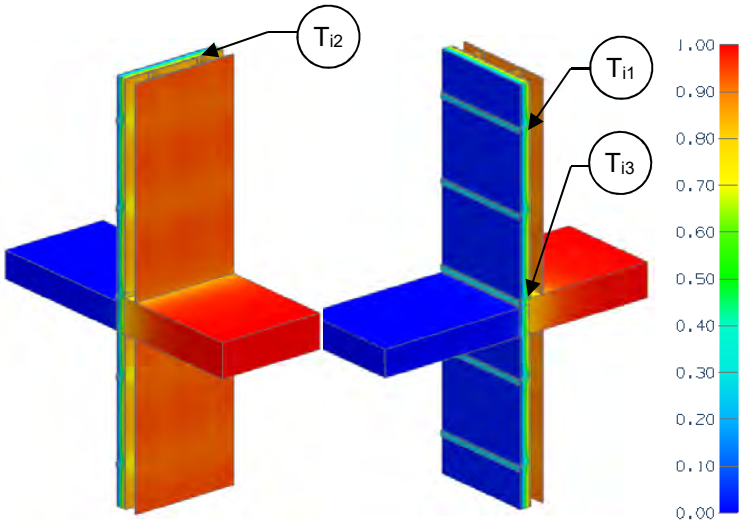

View from Interior View from Exterior

Thermal Performance Indicators

Assembly 1D (Nominal) R-Value	R_{1D}	R-3.2 (0.56 RSI) + exterior insulation
Transmittance / Resistance without Anomaly	U_o, R_o	“clear wall” U- and R-value, without slab
Transmittance / Resistance	U, R	U- and R-values for overall assembly
Surface Temperature Index[1]	T_i	0 = exterior temperature 1 = interior temperature
Linear Transmittance	ψ	Incremental increase in transmittance per linear length of slab

[1]Assumptions and limitations for surface temperatures identified in ASHRAE 1365-RP

Nominal (1D) vs. Assembly Performance Indicators

Exterior Insulation 1D R-Value (RSI)	R_{1D} ft²·hr·°F / Btu (m² K / W)	R_o ft²·hr·°F / Btu (m² K / W)	U_o Btu/ft² ·hr ·°F (W/m² K)	R ft²·hr·°F / Btu (m² K / W)	U Btu/ft² ·hr ·°F (W/m² K)	ψ Btu/ft hr °F (W/m K)
R-15 (2.64)	R-18.2 (3.20)	R-11.3 (1.99)	0.088 (0.50)	R-10.4 (1.83)	0.096 (0.55)	0.075 (0.130)

Temperature Indices

T_{i1}	0.75	Min T on sheathing away from slab, between studs at girts
T_{i2}	0.86	Max T on sheathing away from slab, between girts at studs
T_{i3}	0.80	Min T on slab exposed to interior air, at sheathing between studs

Detail 5.2.42

Exterior Insulated 3 5/8” x 1 5/8” Steel Stud (16” o.c.) Wall Assembly with Horizontal Z-girts (24” o.c.) Supporting Metal Cladding – Isokorb KXT65-V8 Thermally Broken Slab Projection with Insulated Curb

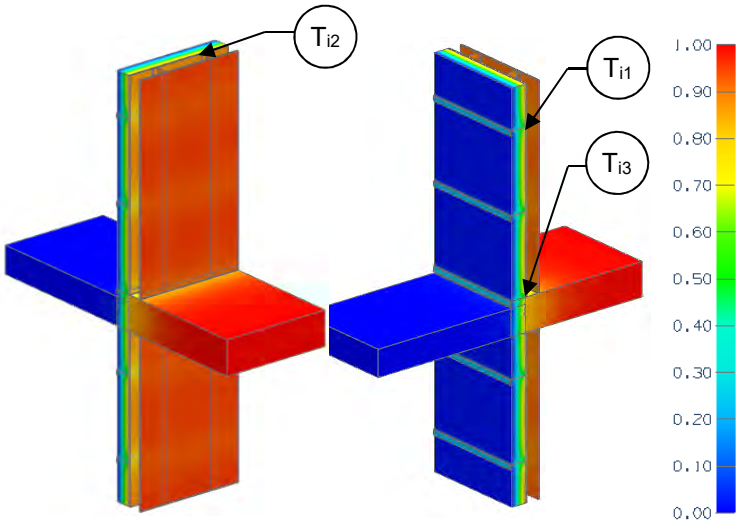

View from Interior View from Exterior

Thermal Performance Indicators

Assembly 1D (Nominal) R-Value	R_{1D}	R-3.2 (0.56 RSI) + exterior insulation
Transmittance / Resistance without Anomaly	U_o, R_o	“clear wall” U- and R-value, without slab
Transmittance / Resistance	U, R	U- and R-values for overall assembly
Surface Temperature Index[1]	T_i	0 = exterior temperature 1 = interior temperature
Linear Transmittance	ψ	Incremental increase in transmittance per linear length of slab

[1]Assumptions and limitations for surface temperatures identified in ASHRAE 1365-RP

Nominal (1D) vs. Assembly Performance Indicators

Exterior Insulation 1D R-Value (RSI)	R_{1D} ft²·hr·°F / Btu (m² K / W)	R_o ft²·hr·°F / Btu (m² K / W)	U_o Btu/ft² ·hr ·°F (W/m² K)	R ft²·hr·°F / Btu (m² K / W)	U Btu/ft² ·hr ·°F (W/m² K)	ψ Btu/ft hr °F (W/m K)
R-22.5 (3.96)	R-25.7 (4.52)	R-13.8 (2.44)	0.072 (0.41)	R-11.8 (2.07)	0.085 (0.48)	0.126 (0.217)

Temperature Indices

T_{i1}	0.78	Min T on sheathing away from slab, between studs at girts
T_{i2}	0.89	Max T on sheathing away from slab, between girts at studs
T_{i3}	0.81	Min T on slab exposed to interior air, at sheathing between studs

Detail 5.2.43

Exterior Insulated 3 5/8" x 1 5/8" Steel Stud (16" o.c.) Wall Assembly with Horizontal Z-girts (24" o.c.) Supporting Metal Cladding – Isokorb KXT15-V6 Thermally Broken Slab Projection with Insulated Curb

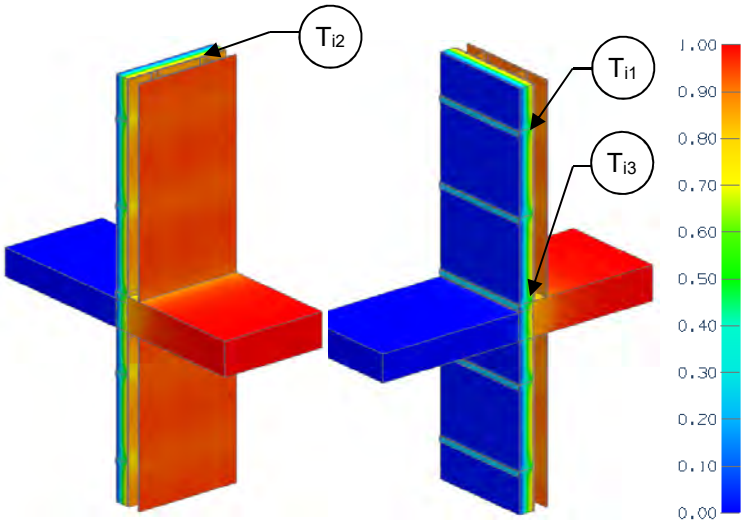

View from Interior View from Exterior

Thermal Performance Indicators

Assembly 1D (Nominal) R-Value	R_{1D}	R-3.2 (0.56 RSI) + exterior insulation
Transmittance / Resistance without Anomaly	U_o, R_o	"clear wall" U- and R-value, without slab
Transmittance / Resistance	U, R	U- and R-values for overall assembly
Surface Temperature Index[1]	T_i	0 = exterior temperature 1 = interior temperature
Linear Transmittance	ψ	Incremental increase in transmittance per linear length of slab

[1]Assumptions and limitations for surface temperatures identified in ASHRAE 1365-RP

Nominal (1D) vs. Assembly Performance Indicators

Exterior Insulation 1D R-Value (RSI)	R_{1D} ft²·hr·°F / Btu (m² K / W)	R_o ft²·hr·°F / Btu (m² K / W)	U_o Btu/ft² ·hr ·°F (W/m² K)	R ft²·hr·°F / Btu (m² K / W)	U Btu/ft² ·hr ·°F (W/m² K)	ψ Btu/ft hr °F (W/m K)
R-22.5 (3.96)	R-25.7 (4.52)	R-13.8 (2.44)	0.072 (0.41)	R-12.6 (2.22)	0.079 (0.45)	0.068 (0.118)

Temperature Indices

T_{i1}	0.78	Min T on sheathing away from slab, between studs at girts
T_{i2}	0.89	Max T on sheathing away from slab, between girts at studs
T_{i3}	0.83	Min T on slab exposed to interior air, at sheathing between studs

Detail 5.2.44

Exterior and Interior Insulated 3 5/8" x 1 5/8" Steel Stud (16" o.c.) Wall Assembly with Horizontal Z-girts (24" o.c.) Supporting Metal Cladding – Isokorb K65-V8 Thermally Broken Slab Projection with Insulated Curb

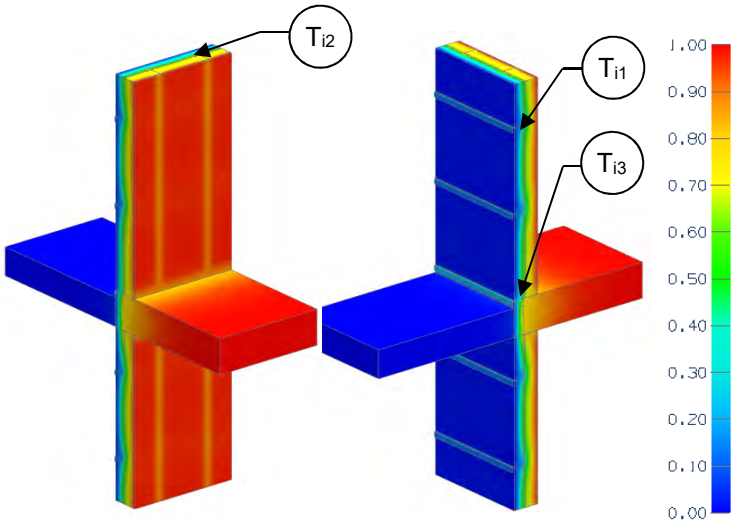

View from Interior View from Exterior

Thermal Performance Indicators

Assembly 1D (Nominal) R-Value	R_{1D}	R-14.3 (2.52 RSI) + exterior insulation
Transmittance / Resistance without Anomaly	U_o, R_o	"clear wall" U- and R-value, without slab
Transmittance / Resistance	U, R	U- and R-values for overall assembly
Surface Temperature Index[1]	T_i	0 = exterior temperature 1 = interior temperature
Linear Transmittance	ψ	Incremental increase in transmittance per linear length of slab

[1]Assumptions and limitations for surface temperatures identified in ASHRAE 1365-RP

Nominal (1D) vs. Assembly Performance Indicators

Exterior Insulation 1D R-Value (RSI)	R_{1D} ft²·hr·°F / Btu (m² K / W)	R_o ft²·hr·°F / Btu (m² K / W)	U_o Btu/ft² ·hr ·°F (W/m² K)	R ft²·hr·°F / Btu (m² K / W)	U Btu/ft² ·hr ·°F (W/m² K)	ψ Btu/ft hr °F (W/m K)
R-15 (2.64)	R-29.3 (5.16)	R-18.5 (3.25)	0.054 (0.31)	R-13.5 (2.38)	0.074 (0.42)	0.196 (0.339)

Temperature Indices

T_{i1}	0.36	Min T on sheathing away from slab, between studs at girts
T_{i2}	0.70	Max T on sheathing away from slab, between girts at studs
T_{i3}	0.63	Min T on slab exposed to interior air, at sheathing between studs

Detail 5.2.45

Exterior and Interior Insulated 3 5/8" x 1 5/8" Steel Stud (16" o.c.) Wall Assembly with Horizontal Z-girts (24" o.c.) Supporting Metal Cladding – Isokorb K10-V6 Thermally Broken Slab Projection with Insulated Curb

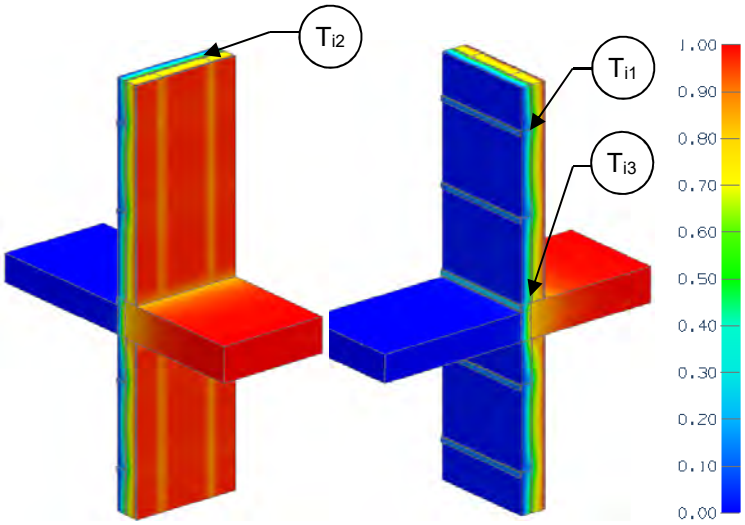

View from Interior View from Exterior

Thermal Performance Indicators

Assembly 1D (Nominal) R-Value	R_{1D}	R-14.3 (2.52 RSI) + exterior insulation
Transmittance / Resistance without Anomaly	U_o, R_o	"clear wall" U- and R-value, without slab
Transmittance / Resistance	U, R	U- and R-values for overall assembly
Surface Temperature Index[1]	T_i	0 = exterior temperature 1 = interior temperature
Linear Transmittance	ψ	Incremental increase in transmittance per linear length of slab

[1]Assumptions and limitations for surface temperatures identified in ASHRAE 1365-RP

Nominal (1D) vs. Assembly Performance Indicators

Exterior Insulation 1D R-Value (RSI)	R_{1D} ft²·hr·°F / Btu (m² K / W)	R_o ft²·hr·°F / Btu (m² K / W)	U_o Btu/ft² ·hr ·°F (W/m² K)	R ft²·hr·°F / Btu (m² K / W)	U Btu/ft² ·hr ·°F (W/m² K)	ψ Btu/ft hr °F (W/m K)
R-15 (2.64)	R-29.3 (5.16)	R-18.5 (3.25)	0.054 (0.31)	R-14.8 (2.61)	0.067 (0.38)	0.131 (0.226)

Temperature Indices

T_{i1}	0.36	Min T on sheathing away from slab, between studs at girts
T_{i2}	0.70	Max T on sheathing away from slab, between girts at studs
T_{i3}	0.65	Min T on slab exposed to interior air, at sheathing between studs

Detail 5.2.46

Exterior and Interior Insulated 3 5/8" x 1 5/8" Steel Stud (16" o.c.) Wall Assembly with Horizontal Z-girts (24" o.c.) Supporting Metal Cladding – Isokorb KXT65-V8 Thermally Broken Slab Projection with Insulated Curb

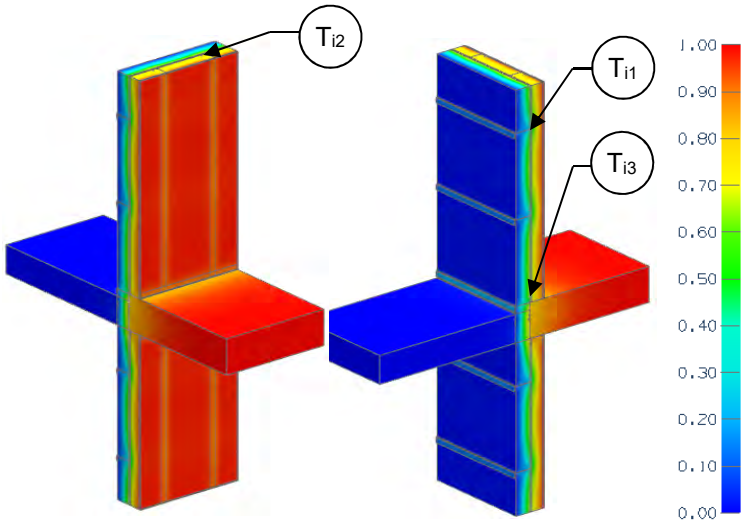

View from Interior View from Exterior

Thermal Performance Indicators

Assembly 1D (Nominal) R-Value	R_{1D}	R-14.3 (2.52 RSI) + exterior insulation
Transmittance / Resistance without Anomaly	U_o, R_o	"clear wall" U- and R-value, without slab
Transmittance / Resistance	U, R	U- and R-values for overall assembly
Surface Temperature Index[1]	T_i	0 = exterior temperature 1 = interior temperature
Linear Transmittance	ψ	Incremental increase in transmittance per linear length of slab

[1]Assumptions and limitations for surface temperatures identified in ASHRAE 1365-RP

Nominal (1D) vs. Assembly Performance Indicators

Exterior Insulation 1D R-Value (RSI)	R_{1D} ft²·hr·°F / Btu (m² K / W)	R_o ft²·hr·°F / Btu (m² K / W)	U_o Btu/ft² ·hr ·°F (W/m² K)	R ft²·hr·°F / Btu (m² K / W)	U Btu/ft² ·hr ·°F (W/m² K)	ψ Btu/ft hr °F (W/m K)
R-22.5 (3.96)	R-36.8 (6.48)	R-21.4 (3.76)	0.047 (0.27)	R-15.8 (2.79)	0.063 (0.36)	0.161 (0.278)

Temperature Indices

T_{i1}	0.41	Min T on sheathing away from slab, between studs at girts
T_{i2}	0.74	Max T on sheathing away from slab, between girts at studs
T_{i3}	0.68	Min T on slab exposed to interior air, at sheathing between studs

Detail 5.2.47

Exterior and Interior Insulated 3 5/8" x 1 5/8" Steel Stud (16" o.c.) Wall Assembly with Horizontal Z-girts (24" o.c.) Supporting Metal Cladding – Isokorb KXT15-V6 Thermally Broken Slab Projection with Insulated Curb

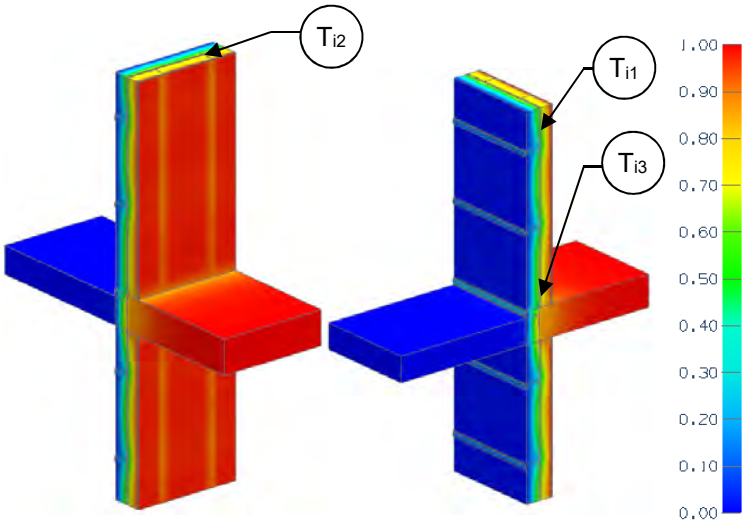

View from Interior View from Exterior

Thermal Performance Indicators

Assembly 1D (Nominal) R-Value	R_{1D}	R-14.3 (2.52 RSI) + exterior insulation
Transmittance / Resistance without Anomaly	U_o, R_o	"clear wall" U- and R-value, without slab
Transmittance / Resistance	U, R	U- and R-values for overall assembly
Surface Temperature Index[1]	T_i	0 = exterior temperature 1 = interior temperature
Linear Transmittance	ψ	Incremental increase in transmittance per linear length of slab

[1]Assumptions and limitations for surface temperatures identified in ASHRAE 1365-RP

Nominal (1D) vs. Assembly Performance Indicators

Exterior Insulation 1D R-Value (RSI)	R_{1D} ft²·hr·°F / Btu (m² K / W)	R_o ft²·hr·°F / Btu (m² K / W)	U_o Btu/ft² ·hr ·°F (W/m² K)	R ft²·hr·°F / Btu (m² K / W)	U Btu/ft² ·hr ·°F (W/m² K)	ψ Btu/ft hr °F (W/m K)
R-22.5 (3.96)	R-36.8 (6.48)	R-21.4 (3.76)	0.047 (0.27)	R-17.4 (3.06)	0.058 (0.33)	0.106 (0.183)

Temperature Indices

T_{i1}	0.41	Min T on sheathing away from slab, between studs at girts
T_{i2}	0.74	Max T on sheathing away from slab, between girts at studs
T_{i3}	0.70	Min T on slab exposed to interior air, at sheathing between studs

Detail 5.3.1

Exterior Insulated 3 5/8" x 1 5/8" Steel Stud (16" o.c.) Drained EIFS Wall Assembly – Window and Intermediate Floor Intersection

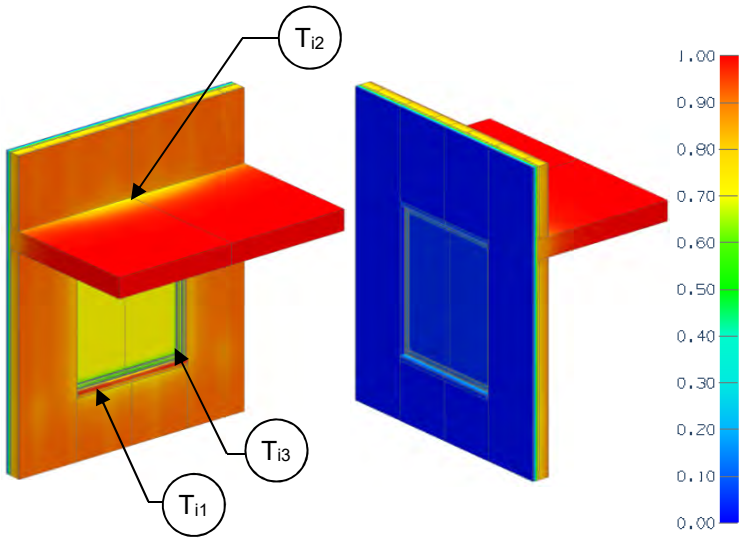

View from Interior View from Exterior

Thermal Performance Indicators

Assembly 1D (Nominal) R-Value	R_{1D}	R-2.7 (0.47 RSI) + exterior insulation
Transmittance / Resistance without Anomaly	U_o, R_o	"clear wall" U- and R-value, without slab and window
Transmittance / Resistance	U_s, R_s, U_g	U and R-values for s = wall + slab g = glazing
Transmittance / Resistance	U, R	U- and R-values for overall assembly
Surface Temperature Index[1]	T_i	0 = exterior temperature 1 = interior temperature
Linear Transmittance	ψ_s, ψ_g	Incremental increase in transmittance per linear length of s = slab g = glazing transition

[1]Assumptions and limitations for surface temperatures identified in ASHRAE 1365-RP

Nominal (1D) vs. Assembly Performance Indicators

Base Assembly – Wall

Exterior Insulation 1D R-Value (RSI)	R_{1D} ft²·hr·°F / Btu (m² K / W)	R_o ft²·hr·°F / Btu (m² K / W)	U_o Btu/ft² ·hr ·°F (W/m² K)
R-7.5 (1.32)	R-10.2 (1.80)	R-10.0 (1.76)	0.100 (0.57)
R-11.3 (1.98)	R-13.9 (2.46)	R-13.7 (2.41)	0.073 (0.41)
R-15 (2.64)	R-17.7 (3.12)	R-17.4 (3.06)	0.057 (0.33)

Base Assembly - Glazing

$U_{centre\ of\ glazing}$ Btu/ft² ·hr ·°F (W/m² K)	U_g Btu/ft² ·hr ·°F (W/m² K)
0.321 (1.82)	0.400 (2.27)

Window Transition Linear Transmittance

Exterior Insulation 1D R-Value (RSI)	R ft²·hr·°F / Btu (m² K / W)	U Btu/ft² ·hr ·°F (W/m² K)	ψ_g[2] Btu/ft hr °F (W/m K)
R-7.5 (1.32)	R-4.8 (0.84)	0.210 (1.19)	0.160 (0.277)
R-11.3 (1.98)	R-5.2 (0.92)	0.192 (1.09)	0.175 (0.303)
R-15 (2.64)	R-5.5 (0.97)	0.182 (1.03)	0.187 (0.324)

Slab Linear Transmittance

R_s ft²·hr·°F / Btu (m² K / W)	U_s Btu/ft² ·hr ·°F (W/m² K)	ψ_s Btu/ft² ·hr ·°F (W/m² K)
R-9.7 (1.70)	0.104 (0.59)	0.032 (0.055)
R-13.3 (2.35)	0.075 (0.43)	0.018 (0.032)
R-17.0 (2.99)	0.059 (0.33)	0.012 (0.022)

Temperature Indices

	R7.5	R11.3	R15	
T_{i1}	0.33	0.33	0.34	Min T on sheathing, below window sill
T_{i2}	0.86	0.89	0.91	Max T on sheathing, at slab intersection away from window
T_{i3}	0.55	0.56	0.56	Min T on window frame, at corner of window at glass

[2]For the linear transmittance, use the window perimeter

Detail 5.3.2

Exterior and Interior Insulated 3 5/8" x 1 5/8" Steel Stud (16" o.c.) Drained EIFS Wall Assembly – Window and Intermediate Floor Intersection

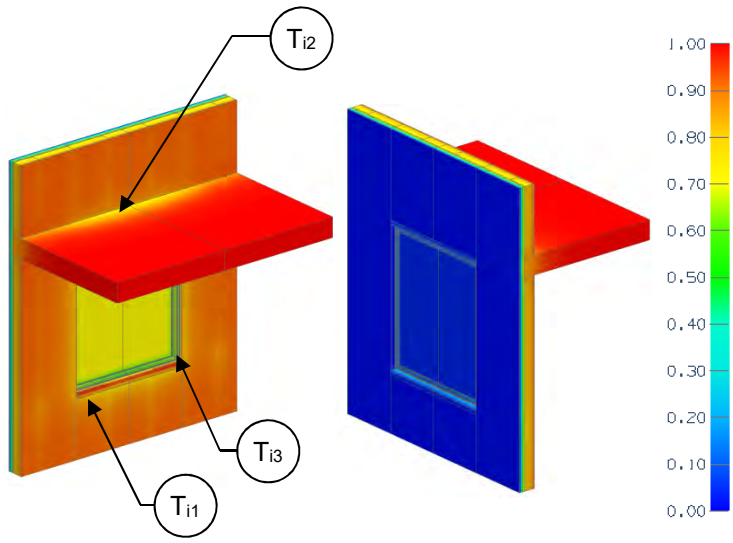

View from Interior View from Exterior

Thermal Performance Indicators

Assembly 1D (Nominal) R-Value	R_{1D}	R-14.2 (2.51 RSI) + exterior insulation
Transmittance / Resistance without Anomaly	U_o, R_o	"clear wall" U- and R-value, without slab and window
Transmittance / Resistance	U_s, R_s, U_g	U and R-values for s = wall + slab g = glazing
Transmittance / Resistance	U, R	U- and R-values for overall assembly
Surface Temperature Index[1]	T_i	0 = exterior temperature 1 = interior temperature
Linear Transmittance	ψ_s, ψ_g	Incremental increase in transmittance per linear length of s = slab g = glazing transition

[1]Assumptions and limitations for surface temperatures identified in ASHRAE 1365-RP

Nominal (1D) vs. Assembly Performance Indicators

Base Assembly – Wall

Exterior Insulation 1D R-Value (RSI)	R_{1D} ft²·hr·°F / Btu (m² K / W)	R_o ft²·hr·°F / Btu (m² K / W)	U_o Btu/ft² ·hr ·°F (W/m² K)
R-7.5 (1.32)	R-21.7 (3.83)	R-16.6 (2.93)	0.060 (0.34)
R-15 (2.64)	R-29.2 (5.15)	R-24.0 (4.23)	0.042 (0.24)

Base Assembly - Glazing

$U_{centre\ of\ glazing}$ Btu/ft² ·hr ·°F (W/m² K)	U_g Btu/ft² ·hr ·°F (W/m² K)
0.321 (1.82)	0.400 (2.27)

Window Transition Linear Transmittance

Exterior Insulation 1D R-Value (RSI)	R ft²·hr·°F / Btu (m² K / W)	U Btu/ft² ·hr ·°F (W/m² K)	ψ_g[2] Btu/ft hr °F (W/m K)
R-7.5 (1.32)	R-5.6 (0.98)	0.180 (1.02)	0.136 (0.236)
R-15 (2.64)	R-6.1 (1.07)	0.165 (0.94)	0.155 (0.268)

Slab Linear Transmittance

R_s ft²·hr·°F / Btu (m² K / W)	U_s Btu/ft² ·hr ·°F (W/m² K)	ψ_s Btu/ft² ·hr ·°F (W/m² K)
R-14.5 (2.55)	0.069 (0.39)	0.076 (0.132)
R-22.0 (3.88)	0.045 (0.26)	0.032 (0.056)

[2]For the linear transmittance, use the window perimeter

Temperature Indices

	R7.5	R15	
T_{i1}	0.25	0.26	Min T on sheathing, below window sill between studs
T_{i2}	0.84	0.89	Max T on sheathing, along steel tracks at slab
T_{i3}	0.52	0.53	Min T on window frame, at corner of window at glass

Detail 5.3.3

Exterior Insulated 3 5/8" x 1 5/8" Steel Stud (16" o.c.) Drained EIFS Wall Assembly – Window with Aerogel and Intermediate Floor Intersection

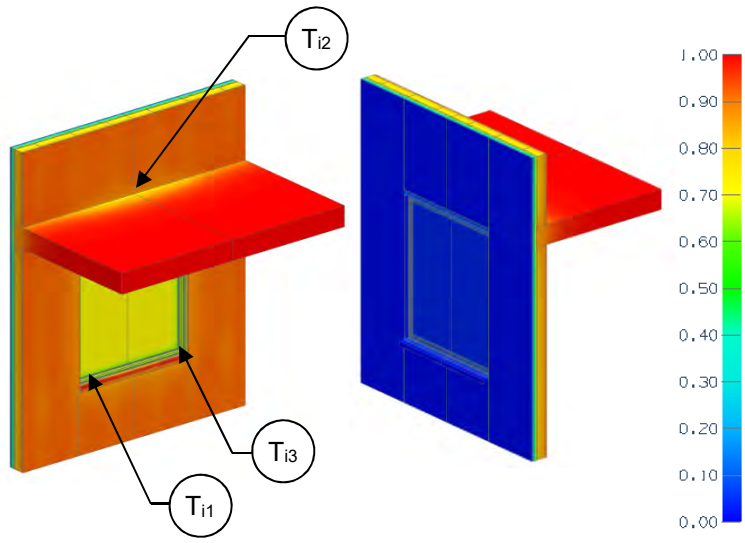

View from Interior View from Exterior

Thermal Performance Indicators

Assembly 1D (Nominal) R-Value	R_{1D}	R-2.7 (0.47 RSI) + exterior insulation
Transmittance / Resistance without Anomaly	U_o, R_o	"clear wall" U- and R-value, without slab and window
Transmittance / Resistance	U_s, R_s, U_g	U and R-values for s = wall + slab g = glazing
Transmittance / Resistance	U, R	U- and R-values for overall assembly
Surface Temperature Index[1]	T_i	0 = exterior temperature 1 = interior temperature
Linear Transmittance	ψ_s, ψ_g	Incremental increase in transmittance per linear length of s = slab g = glazing transition

[1]Assumptions and limitations for surface temperatures identified in ASHRAE 1365-RP

Nominal (1D) vs. Assembly Performance Indicators

Base Assembly – Wall

Exterior Insulation 1D R-Value (RSI)	R_{1D} ft²·hr·°F / Btu (m² K / W)	R_o ft²·hr·°F / Btu (m² K / W)	U_o Btu/ft² ·hr ·°F (W/m² K)
R-7.5 (1.32)	R-10.2 (1.80)	R-10.0 (1.76)	0.100 (0.57)
R-11.3 (1.98)	R-13.9 (2.46)	R-13.7 (2.41)	0.073 (0.41)
R-15 (2.64)	R-17.7 (3.12)	R-17.4 (3.06)	0.057 (0.33)

Base Assembly - Glazing

$U_{centre\ of\ glazing}$ Btu/ft² ·hr ·°F (W/m² K)	U_g Btu/ft² ·hr ·°F (W/m² K)
0.321 (1.82)	0.400 (2.27)

Window Transition Linear Transmittance

Exterior Insulation 1D R-Value (RSI)	R ft²·hr·°F / Btu (m² K / W)	U Btu/ft² ·hr ·°F (W/m² K)	ψ_g[2] Btu/ft hr °F (W/m K)
R-7.5 (1.32)	R-5.1 (0.90)	0.196 (1.11)	0.093 (0.160)
R-11.3 (1.98)	R-5.7 (1.00)	0.176 (1.00)	0.103 (0.178)
R-15 (2.64)	R-6.0 (1.06)	0.166 (0.94)	0.112 (0.194)

Slab Linear Transmittance

R_s ft²·hr·°F / Btu (m² K / W)	U_s Btu/ft² ·hr ·°F (W/m² K)	ψ_s Btu/ft² ·hr ·°F (W/m² K)
R-9.7 (1.70)	0.104 (0.59)	0.032 (0.055)
R-13.3 (2.35)	0.075 (0.43)	0.018 (0.032)
R-17.0 (2.99)	0.059 (0.33)	0.012 (0.022)

Temperature Indices

	R7.5	R11.3	R15	
T_{i1}	0.60	0.62	0.63	Min T on sheathing, below window sill
T_{i2}	0.87	0.90	0.92	Max T on sheathing, at slab intersection away from window
T_{i3}	0.59	0.59	0.59	Min T on window frame, at corner of window at glass

[2]For the linear transmittance, use the window perimeter

Detail 5.3.4

Exterior and Interior Insulated 3 5/8" x 1 5/8" Steel Stud (16" o.c.) Drained EIFS Wall Assembly – Window with Aerogel and Intermediate Floor Intersection

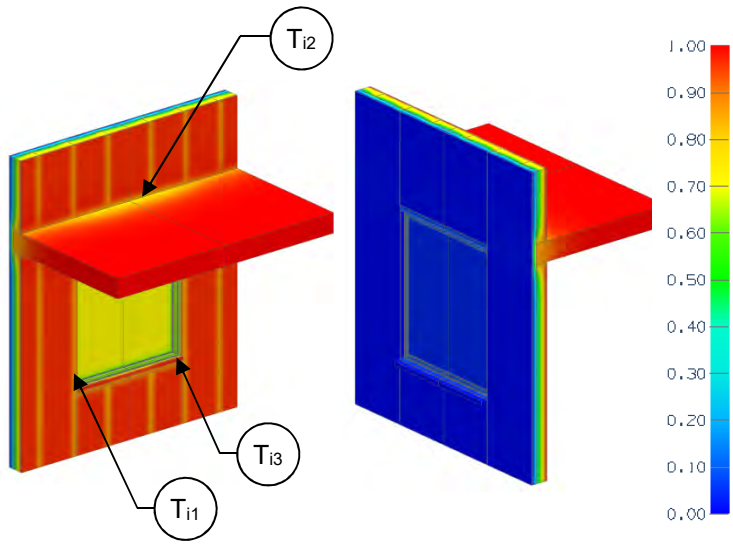

View from Interior View from Exterior

Thermal Performance Indicators

Assembly 1D (Nominal) R-Value	R_{1D}	R-14.2 (2.51 RSI) + exterior insulation
Transmittance / Resistance without Anomaly	U_o, R_o	"clear wall" U- and R-value, without slab and window
Transmittance / Resistance	U_s, R_s, U_g	U and R-values for s = wall + slab g = glazing
Transmittance / Resistance	U, R	U- and R-values for overall assembly
Surface Temperature Index[1]	T_i	0 = exterior temperature 1 = interior temperature
Linear Transmittance	ψ_s, ψ_g	Incremental increase in transmittance per linear length of s = slab g = glazing transition

[1]Assumptions and limitations for surface temperatures identified in ASHRAE 1365-RP

Nominal (1D) vs. Assembly Performance Indicators

Base Assembly – Wall

Exterior Insulation 1D R-Value (RSI)	R_{1D} ft²·hr·°F / Btu (m² K / W)	R_o ft²·hr·°F / Btu (m² K / W)	U_o Btu/ft² ·hr ·°F (W/m² K)
R-7.5 (1.32)	R-21.7 (3.83)	R-16.6 (2.93)	0.060 (0.34)
R-15 (2.64)	R-29.2 (5.15)	R-24.0 (4.23)	0.042 (0.24)

Base Assembly - Glazing

$U_{centre\ of\ glazing}$ Btu/ft² ·hr ·°F (W/m² K)	U_g Btu/ft² ·hr ·°F (W/m² K)
0.321 (1.82)	0.400 (2.27)

Window Transition Linear Transmittance

Exterior Insulation 1D R-Value (RSI)	R ft²·hr·°F / Btu (m² K / W)	U Btu/ft² ·hr ·°F (W/m² K)	ψ_g[2] Btu/ft hr °F (W/m K)
R-7.5 (1.32)	R-6.0 (1.05)	0.168 (0.95)	0.083 (0.144)
R-15 (2.64)	R-6.5 (1.15)	0.154 (0.87)	0.103 (0.178)

Slab Linear Transmittance

R_s ft²·hr·°F / Btu (m² K / W)	U_s Btu/ft² ·hr ·°F (W/m² K)	ψ_s Btu/ft² ·hr ·°F (W/m² K)
R-14.5 (2.55)	0.069 (0.39)	0.076 (0.132)
R-22.0 (3.88)	0.045 (0.26)	0.032 (0.056)

[2]For the linear transmittance, use the window perimeter

Temperature Indices

	R7.5	R15	
T_{i1}	0.39	0.51	Min T on sheathing, below window sill between studs
T_{i2}	0.85	0.90	Max T on sheathing, along steel tracks at slab
T_{i3}	0.56	0.57	Min T on window frame, at corner of window at glass

Detail 5.3.5

Exterior Insulated 3 5/8″ x 1 5/8″ Steel Stud (16″ o.c.) Wall Assembly with Horizontal Z-Girts (24″ o.c.) Supporting Metal Cladding – Window & Slab Intersection

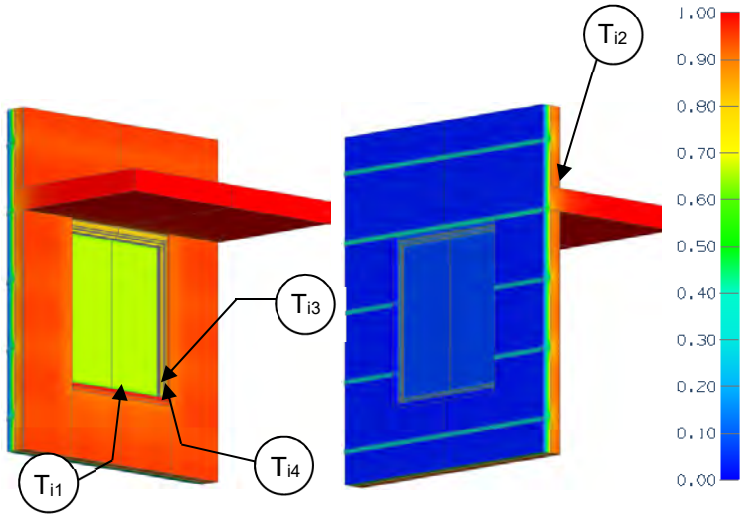

View from Interior View from Exterior

Thermal Performance Indicators

Assembly 1D (Nominal) R-Value	R_{1D}	R-3.2 (0.56 RSI) + horizontal exterior insulation
Transmittance / Resistance without Anomaly	U_o, R_o	"clear wall" U- and R-value, without slab and window
Transmittance / Resistance	U_s, R_s, U_g	U and R-values for s = wall + slab g = glazing
Transmittance / Resistance	U, R	U- and R-values for overall assembly
Surface Temperature Index[1]	T_i	0 = exterior temperature 1 = interior temperature
Linear Transmittance	ψ_s, ψ_g	Incremental increase in transmittance per linear length of s = slab g = glazing transition

[1]Assumptions and limitations for surface temperatures identified in ASHRAE 1365-RP

Nominal (1D) vs. Assembly Performance Indicators

Base Assembly – Wall

Exterior Insulation 1D R-Value (RSI)	R_{1D} ft²·hr·°F / Btu (m² K / W)	R_o ft²·hr·°F / Btu (m² K / W)	U_o Btu/ft² ·hr ·°F (W/m² K)
R-5 (0.88)	R-8.2 (1.44)	R-6.8 (1.21)	0.146 (0.83)
R-15 (2.64)	R-18.2 (3.20)	R-11.3 (1.99)	0.088 (0.50)
R-25 (4.40)	R-28.2 (4.96)	R-14.5 (2.56)	0.069 (0.39)

Base Assembly - Glazing

$U_{centre\ of\ glazing}$ Btu/ft² ·hr ·°F (W/m² K)	U_g Btu/ft² ·hr ·°F (W/m² K)
0.321 (1.82)	0.400 (2.27)

Window Transition Linear Transmittance

Exterior Insulation 1D R-Value (RSI)	R ft²·hr·°F / Btu (m² K / W)	U Btu/ft² ·hr ·°F (W/m² K)	ψ_g[2] Btu/ft hr °F (W/m K)
R-5 (0.88)	R-6.0 (1.05)	0.168 (0.95)	0.044 (0.077)
R-15 (2.64)	R-9.0 (1.59)	0.111 (0.63)	0.062 (0.108)
R-25 (4.40)	R-10.9 (1.91)	0.092 (0.52)	0.069 (0.120)

Slab Linear Transmittance

R_s ft²·hr·°F / Btu (m² K / W)	U_s Btu/ft² ·hr ·°F (W/m² K)	ψ_s Btu/ft² ·hr ·°F (W/m² K)
R-6.4 (1.13)	1.56 (0.89)	0.061 (0.106)
R-10.8 (1.90)	0.093 (0.53)	0.025 (0.044)
R-13.9 (2.45)	0.072 (0.41)	0.019 (0.034)

Temperature Indices

	R5	R15	R25	
T_{i1}	0.39	0.39	0.39	Min T on sheathing, interior surface at window sill, centre of cavity
T_{i2}	0.79	0.88	0.91	Max T on sheathing, at slab floor, at studs, away from window
T_{i3}	0.61	0.62	0.63	Min T on window frame, at bottom corner
T_{i4}	0.58	0.58	0.59	Min T on window glass, at bottom corner

[2]For the linear transmittance, use the window perimeter

Detail 5.3.6

Exterior and Interior Insulated 3 5/8" x 1 5/8" Steel Stud (16" o.c.) Wall Assembly with Horizontal Z-girts (24" o.c.) Supporting Metal Cladding – Window and Intermediate Floor Intersection

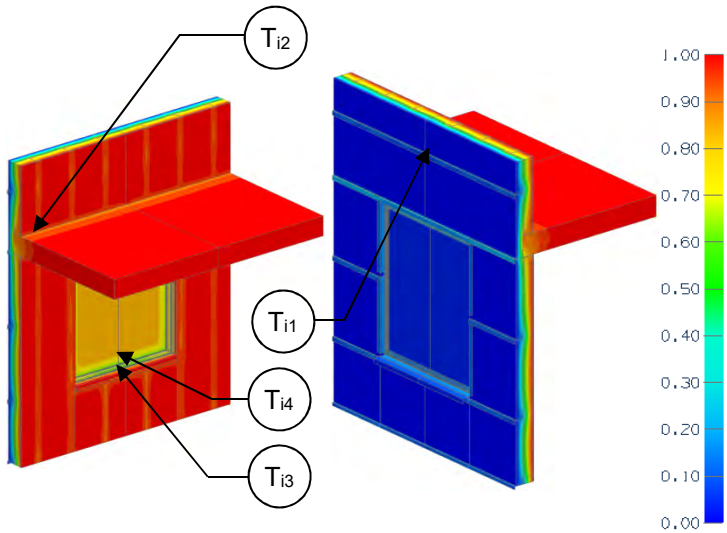

View from Interior View from Exterior

Thermal Performance Indicators

Assembly 1D (Nominal) R-Value	R_{1D}	R-14.4 (2.54 RSI) + exterior insulation
Transmittance / Resistance without Anomaly	U_o, R_o	"clear wall" U- and R-value, without slab and window
Transmittance / Resistance	U_s, R_s, U_g	U and R-values for s = concrete wall + slab g = glazing
Transmittance / Resistance	U, R	U- and R-values for overall assembly
Surface Temperature Index[1]	T_i	0 = exterior temperature 1 = interior temperature
Linear Transmittance	ψ_s, ψ_g	Incremental increase in transmittance per linear length of s = slab g = glazing transition

[1]Assumptions and limitations for surface temperatures identified in ASHRAE 1365-RP

Nominal (1D) vs. Assembly Performance Indicators

Base Assembly – Wall

Exterior Insulation 1D R-Value (RSI)	R_{1D} ft²·hr·°F / Btu (m² K / W)	R_o ft²·hr·°F / Btu (m² K / W)	U_o Btu/ft² ·hr ·°F (W/m² K)
R-10 (1.76)	R-24.4 (4.30)	R-16.1 (2.83)	0.062 (0.35)
R-15 (2.64)	R-29.4 (5.18)	R-18.5 (3.26)	0.054 (0.31)

Base Assembly - Glazing

$U_{centre\ of\ glass}$ Btu/ft² ·hr ·°F (W/m² K)	U_g Btu/ft² ·hr ·°F (W/m² K)
0.321 (1.82)	0.400 (2.27)

Window Transition Linear Transmittance

Exterior Insulation 1D R-Value (RSI)	R ft²·hr·°F / Btu (m² K / W)	U Btu/ft² ·hr ·°F (W/m² K)	ψ_g[2] Btu/ft ·hr·°F (W/m K)
R-10 (1.76)	R-5.8 (1.02)	0.173 (0.98)	0.113 (0.196)
R-15 (2.64)	R-5.8 (1.03)	0.171 (0.97)	0.130 (0.225)

Slab Linear Transmittance

R_s ft²·hr·°F / Btu (m² K / W)	U_s Btu/ft² ·hr ·°F (W/m² K)	ψ_s Btu/ft² ·hr ·°F (W/m² K)
R-12 (2.19)	0.080 (0.46)	0.109 (0.188)
R-14 (2.53)	0.069 (0.39)	0.092 (0.160)

Temperature Indices

	R10	R15	
T_{i1}	0.24	0.26	Min T on sheathing, between studs at girts, away from window
T_{i2}	0.81	0.83	Max T on sheathing, at slab floor, at studs, away from window
T_{i3}	0.61	0.61	Min T on window frame, at bottom edge of glazing
T_{i4}	0.61	0.60	Min T on window glass, at bottom edge

[2]For the linear transmittance, use the window perimeter

Detail 5.3.7

Exterior and Interior Insulated 3 5/8" x 1 5/8" Steel Stud (16" o.c.) Wall Assembly with Vertical Z Girts (16" o.c.) Supporting Stucco Cladding – Window and Intermediate Floor Intersection

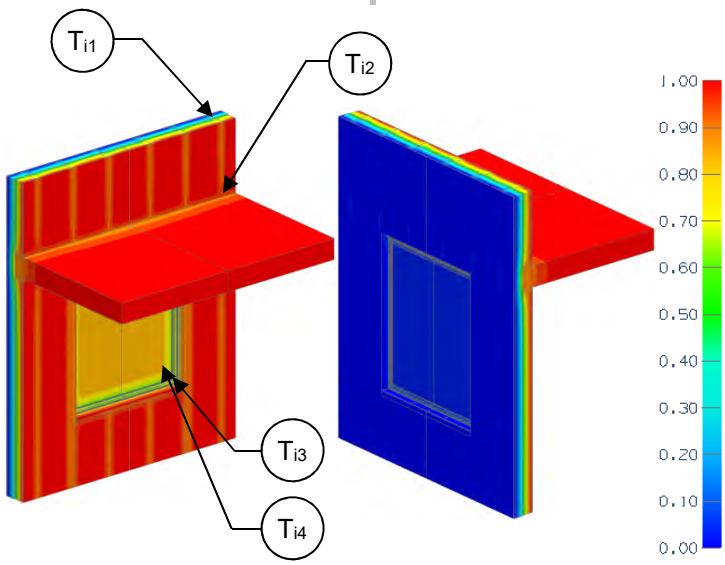

View from Interior View from Exterior

Thermal Performance Indicators

Assembly 1D (Nominal) R-Value	R_{1D}	R-14.5 (2.55 RSI) + exterior insulation
Transmittance / Resistance without Anomaly	U_o, R_o	"clear wall" U- and R-value, without slab and window
Transmittance / Resistance	U_s, R_s, U_g	U and R-values for s = concrete wall + slab g = glazing
Transmittance / Resistance	U, R	U- and R-values for overall assembly
Surface Temperature Index[1]	T_i	0 = exterior temperature 1 = interior temperature
Linear Transmittance	ψ_s, ψ_g	Incremental increase in transmittance per linear length of s = slab g = glazing transition

[1]Assumptions and limitations for surface temperatures identified in ASHRAE 1365-RP

Nominal (1D) vs. Assembly Performance Indicators

Base Assembly – Wall

Exterior Insulation 1D R-Value (RSI)	R_{1D} ft²·hr·°F / Btu (m² K / W)	R_o ft²·hr·°F / Btu (m² K / W)	U_o Btu/ft² ·hr ·°F (W/m² K)
R-10 (1.76)	R-24.5 (4.31)	R-13.0 (2.29)	0.077 (0.44)
R-15 (2.64)	R-29.5 (5.20)	R-14.1 (2.49)	0.071 (0.40)

Base Assembly - Glazing

$U_{centre\ of\ glass}$ Btu/ft² ·hr ·°F (W/m² K)	U_g Btu/ft² ·hr ·°F (W/m² K)
0.321 (1.82)	0.400 (2.27)

Window Transition Linear Transmittance

Exterior Insulation 1D R-Value (RSI)	R ft²·hr·°F / Btu (m² K / W)	U Btu/ft² ·hr ·°F (W/m² K)	ψ_g[2] Btu/ft ·hr·°F (W/m K)
R-10 (1.76)	R-5.5 (0.96)	0.183 (1.04)	0.074 (0.128)
R-15 (2.64)	R-6.6 (0.99)	0.179 (1.01)	0.081 (0.140)

Slab Linear Transmittance

R_s ft²·hr·°F / Btu (m² K / W)	U_s Btu/ft² ·hr ·°F (W/m² K)	ψ_s Btu/ft² ·hr ·°F (W/m² K)
R-11.5 (2.02)	0.087 (0.50)	0.090 (0.155)
R-12.6 (2.22)	0.079 (0.45)	0.075 (0.129)

Temperature Indices

	R10	R15	
T_{i1}	0.34	0.38	Min T on sheathing, along studs behind girt away from window/slab
T_{i2}	0.79	0.81	Max T on sheathing, at slab floor, between studs, away from window
T_{i3}	0.59	0.59	Min T on window frame, at bottom corner
T_{i4}	0.58	0.58	Min T on window glass, at corners

[2]For the linear transmittance, use the window perimeter

Detail 5.3.8

Interior Insulated Steel Frame Wall Assembly with Brick Cladding - Window Intersection

Detail referenced from work done by Passive House Academy

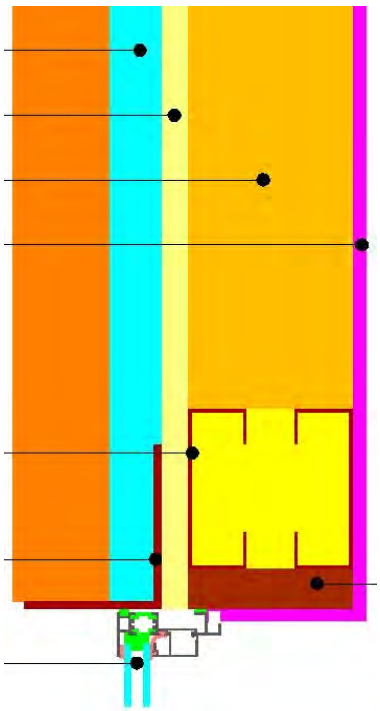

Head

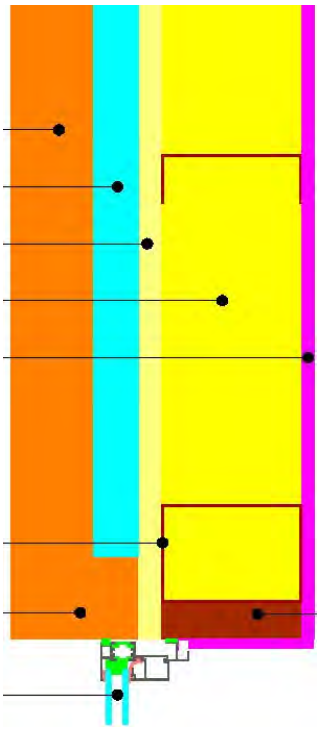

Jamb

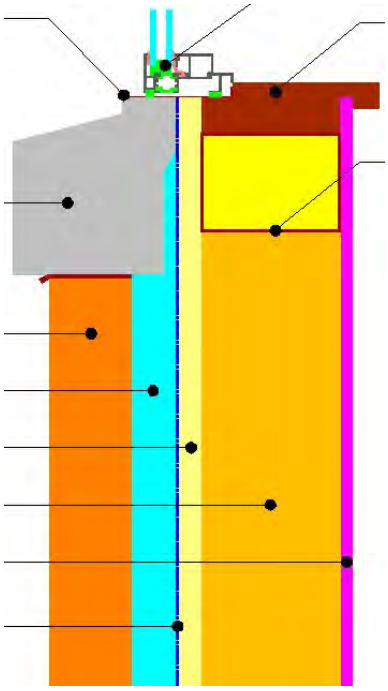

Sill

Thermal Performance

Condition	Clear Wall R-Value ft²·hr·°F / Btu (m²K / W)	Clear Wall U-Value Btu/ ft²·hr·°F (W/m²K)	Linear Transmittance (Ψ) Btu/hr ft °F (W/m K)
Wall Clear Field	R-22.6 (3.98)	0.044 (0.251)	-
Typical Jamb			0.110 (0.191)
Typical Head			0.143 (0.247)
Typical Sill			0.278 (0.481)
Typical Overall Window			0.160 (0.278)

Detail 5.3.9

Interior Insulated Steel Frame Wall Assembly with Brick Cladding - Window Intersection Aligned with Insulation

Detail referenced from work done by Passive House Academy

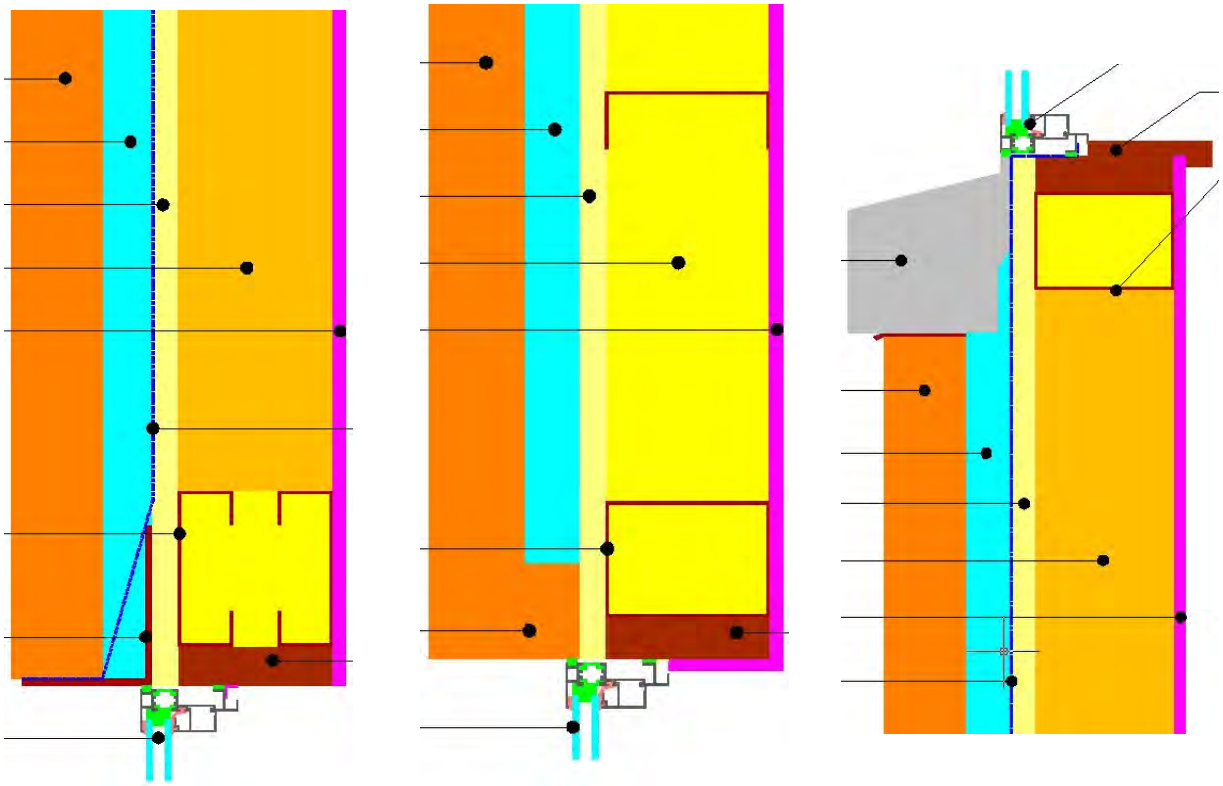

Head Jamb Sill

Thermal Performance

Condition	Clear Wall R-Value ft²·hr·°F / Btu (m²K / W)	Clear Wall U-Value Btu/ ft²·hr·°F (W/m²K)	Linear Transmittance (Ψ) Btu/hr ft °F (W/m K)
Wall Clear Field	R-22.6 (3.98)	0.044 (0.251)	-
Aligned Jamb			0.056 (0.097)
Aligned Head			0.044 (0.077)
Aligned Sill			0.057 (0.098)
Aligned Overall Window			0.053 (0.092)

Detail 5.3.10

Exterior Insulated 6" x 1 5/8" Steel Stud (16" o.c.) Wall Assembly with Thermally Isolated Vertical Brackets and Rail System (24" o.c.) Supporting Metal Cladding – Triple Glazed Aluminum Window & Intermediate Floor Intersection with Window Thermal Break Positioned in Steel Framing

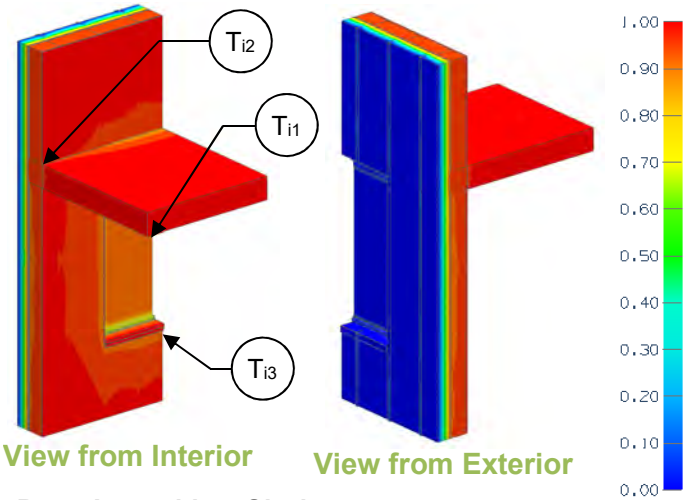

Base Assembly – Glazing

$U_{centre\ of\ glass}$ Btu/ft² ·hr ·°F (W/m² K)	U_g Btu/ft² ·hr ·°F (W/m² K)
0.142 (0.81)	0.303 (1.72)

Thermal Performance Indicators

Assembly 1D (Nominal) R-Value	R_{1D}	R-3.2 (0.56 RSI) + exterior insulation
Transmittance / Resistance without Anomaly	U_w, R_w, U_g,	"clear wall" U- and R-value: w = wall without intermediate floor g = glazing
Transmittance / Resistance	U_{floor}, R_{floor}, U_t, R_t	U and R-values for: floor = wall + intermediate floor t = combined wall + floor + window
Surface Temperature Index[1]	T_i	0 = exterior temperature 1 = interior temperature
Linear Transmittance	ψ	Incremental increase in transmittance per linear length

[1]Assumptions and limitations for surface temperatures identified in ASHRAE 1365-RP

Nominal (1D) vs. Assembly Performance Indicators

Base Assembly – Steel Stud Clear Wall

Exterior Insulation 1D R-Value (RSI)	R_{1D} ft²·hr·°F / Btu (m² K / W)	R_w ft²·hr·°F / Btu (m² K / W)	U_w Btu/ft² ·hr ·°F (W/m² K)
R-10 (1.76)	R-13.2 (2.32)	R-11.2 (1.97)	0.090 (0.51)
R-15 (2.64)	R-18.2 (3.20)	R-13.9 (2.45)	0.072 (0.41)
R-20 (3.52)	R-23.2 (4.08)	R-16.9 (2.98)	0.059 (0.34)
R-25 (4.40)	R-28.2 (4.96)	R-19.7 (3.48)	0.051 (0.29)

Intermediate Floor Linear Transmittance

R_{floor} ft²·hr·°F / Btu (m² K / W)	U_{floor} Btu/ft² ·hr ·°F (W/m² K)	ψ_{floor} Btu/ft² ·hr ·°F (W/m² K)
R-10.6 (1.88)	0.094 (0.53)	0.030 (0.052)
R-13.2 (2.32)	0.076 (0.43)	0.029 (0.051)
R-15.9 (2.81)	0.063 (0.36)	0.026 (0.045)
R-18.5 (3.27)	0.054 (0.31)	0.023 (0.040)

Window Transition Transmittance

Exterior Insulation 1D R-Value (RSI)	R_t ft²·hr·°F / Btu (m² K / W)	U_t Btu/ft² ·hr ·°F (W/m² K)	ψ_{Head} Btu/ft ·hr ·°F (W/m K)	ψ_{Sill} Btu/ft ·hr ·°F (W/m K)	ψ_{Jamb} Btu/ft ·hr ·°F (W/m K)	ψ_{Total} Btu/ft ·hr ·°F (W/m K)
R-10 (1.76)	R-6.0 (1.06)	0.166 (0.95)	0.259 (0.448)	0.111 (0.192)	0.102 (0.176)	0.137 (0.238)
R-15 (2.64)	R-6.4 (1.14)	0.155 (0.88)	0.270 (0.467)	0.122 (0.211)	0.110 (0.190)	0.151 (0.261)
R-20 (3.52)	R-6.8 (1.20)	0.147 (0.83)	0.280 (0.484)	0.129 (0.223)	0.115 (0.199)	0.159 (0.275)
R-25 (4.40)	R-7.1 (1.25)	0.141 (0.80)	0.315 (0.545)	0.133 (0.231)	0.120 (0.208)	0.167 (0.289)

Temperature Indices

	R10	R15	R20	R25	
T_{i1}	0.44	0.44	0.44	0.44	Min T on window frame, centre of window head
T_{i2}	0.84	0.87	0.89	0.90	Max T on interior surface of sheathing, along bottom track
T_{i3}	0.58	0.58	0.59	0.60	Min T on interior surface of sheathing, along window sill track

Detail 5.3.11

Exterior and Interior Insulated 6" x 1 5/8" Steel Stud (16" o.c.) Wall Assembly with Thermally Isolated Vertical Brackets and Rail System (24" o.c.) Supporting Metal Cladding – Triple Glazed Aluminum Window & Intermediate Floor Intersection with Window Thermal Break Positioned in Steel Framing

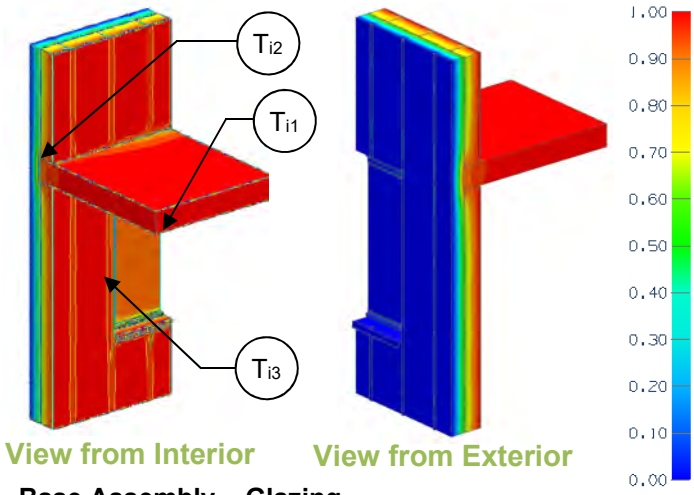

View from Interior View from Exterior

Base Assembly – Glazing

$U_{centre\ of\ glass}$ Btu/ft^2 ·hr ·°F (W/m^2 K)	U_g Btu/ft^2 ·hr ·°F (W/m^2 K)
0.142 (0.81)	0.303 (1.72)

Thermal Performance Indicators

Assembly 1D (Nominal) R-Value	R_{1D}	R-21.3 (3.75 RSI) + exterior insulation
Transmittance / Resistance without Anomaly	U_w, R_w, U_g,	"clear wall" U- and R-value: w = wall without intermediate floor g = glazing
Transmittance / Resistance	U_{floor}, R_{floor}, U_t, R_t	U and R-values for: floor = wall + intermediate floor t = combined wall + floor + window
Surface Temperature Index[1]	T_i	0 = exterior temperature 1 = interior temperature
Linear Transmittance	ψ	Incremental increase in transmittance per linear length

[1]Assumptions and limitations for surface temperatures identified in ASHRAE 1365-RP

Nominal (1D) vs. Assembly Performance Indicators

Base Assembly – Steel Stud Clear Wall

Exterior Insulation 1D R-Value (RSI)	R_{1D} ft^2·hr·°F / Btu (m^2 K / W)	R_w ft^2·hr·°F / Btu (m^2 K / W)	U_w Btu/ft^2 ·hr ·°F (W/m^2 K)
R-10 (1.76)	R-31.3 (5.51)	R-19.2 (3.38)	0.052 (0.30)
R-15 (2.64)	R-36.3 (6.39)	R-21.8 (3.83)	0.046 (0.26)
R-20 (3.52)	R-41.3 (7.28)	R-24.8 (4.37)	0.040 (0.23)
R-25 (4.40)	R-46.3 (8.15)	R-27.6 (4.86)	0.036 (0.21)

Intermediate Floor Linear Transmittance

R_{floor} ft^2·hr·°F / Btu (m^2 K / W)	U_{floor} Btu/ft^2 ·hr ·°F (W/m^2 K)	ψ_{floor} Btu/ft^2 ·hr ·°F (W/m^2 K)
R-16.1 (2.83)	0.062 (0.35)	0.071 (0.122)
R-18.5 (3.26)	0.054 (0.31)	0.056 (0.098)
R-21.3 (3.75)	0.047 (0.27)	0.046 (0.080)
R-23.9 (4.21)	0.042 (0.24)	0.040 (0.068)

Window Transition Transmittance

Exterior Insulation 1D R-Value (RSI)	R_t ft^2·hr·°F / Btu (m^2 K / W)	U_t Btu/ft^2 ·hr ·°F (W/m^2 K)	ψ_{Head} Btu/ft ·hr ·°F (W/m K)	ψ_{Sill} Btu/ft ·hr ·°F (W/m K)	ψ_{Jamb} Btu/ft ·hr ·°F (W/m K)	ψ_{Total} Btu/ft ·hr ·°F (W/m K)
R-10 (1.76)	R-7.4 (1.30)	0.135 (0.77)	0.240 (0.414)	0.073 (0.127)	0.074 (0.127)	0.110 (0.191)
R-15 (2.64)	R-7.6 (1.35)	0.131 (0.74)	0.252 (0.436)	0.079 (0.136)	0.077 (0.132)	0.118 (0.204)
R-20 (3.52)	R-7.9 (1.39)	0.127 (0.72)	0.262 (0.453)	0.083 (0.143)	0.079 (0.136)	0.123 (0.213)
R-25 (4.40)	R-8.1 (1.42)	0.124 (0.70)	0.285 (0.492)	0.086 (0.148)	0.081 (0.141)	0.129 (0.223)

Temperature Indices

	R10	R15	R20	R25	
T_{i1}	0.43	0.43	0.43	0.43	Min T on window frame, centre of window head
T_{i2}	0.74	0.80	0.82	0.84	Max T on interior surface of sheathing, along bottom track
T_{i3}	0.35	0.38	0.38	0.39	Min T on interior surface of sheathing, along window sill track

Detail 5.3.12

Exterior Insulated 6" x 1 5/8" Steel Stud (16" o.c.) Wall Assembly with Thermally Isolated Vertical Brackets and Rail System (24" o.c.) Supporting Metal Cladding – Triple Glazed Aluminum Curtain Wall & Intermediate Floor Intersection with Window Thermal Break Positioned in the Exterior Insulation

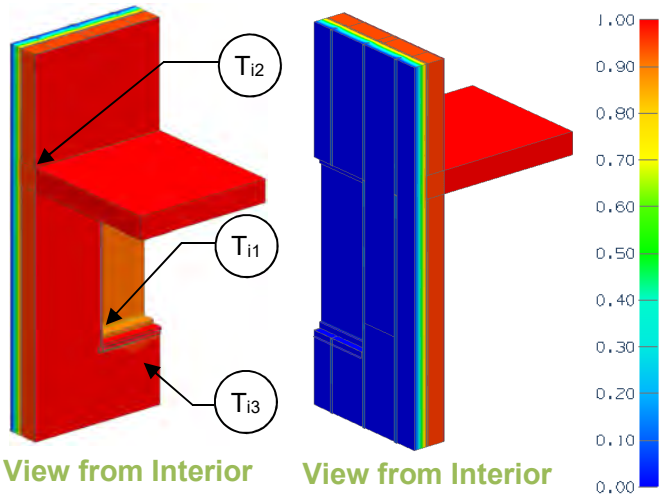

View from Interior View from Interior

Base Assembly – Glazing

$U_{centre\ of\ glass}$ Btu/ft^2 ·hr ·°F (W/m^2 K)	U_g Btu/ft^2 ·hr ·°F (W/m^2 K)
0.142 (0.81)	0.199 (1.13)

Thermal Performance Indicators

Assembly 1D (Nominal) R-Value	R_{1D}	R-3.2 (0.56 RSI) + exterior insulation
Transmittance / Resistance without Anomaly	U_w, R_w, U_g,	"clear wall" U- and R-value: w = wall without intermediate floor g = glazing
Transmittance / Resistance	U_{floor}, R_{floor}, U_t, R_t	U and R-values for: floor = wall + intermediate floor t = combined wall + floor + window
Surface Temperature Index[1]	T_i	0 = exterior temperature 1 = interior temperature
Linear Transmittance	ψ	Incremental increase in transmittance per linear length

[1]Assumptions and limitations for surface temperatures identified in ASHRAE 1365-RP

Nominal (1D) vs. Assembly Performance Indicators

Base Assembly – Steel Stud Clear Wall

Exterior Insulation 1D R-Value (RSI)	R_{1D} ft^2·hr·°F / Btu (m^2 K / W)	R_w ft^2·hr·°F / Btu (m^2 K / W)	U_w Btu/ft^2 ·hr ·°F (W/m^2 K)
R-10 (1.76)	R-13.2 (2.32)	R-11.2 (1.97)	0.090 (0.51)
R-15 (2.64)	R-18.2 (3.20)	R-13.9 (2.45)	0.072 (0.41)
R-20 (3.52)	R-23.2 (4.08)	R-16.9 (2.98)	0.059 (0.34)
R-25 (4.40)	R-28.2 (4.96)	R-19.7 (3.48)	0.051 (0.29)

Intermediate Floor Linear Transmittance

R_{floor} ft^2·hr·°F / Btu (m^2 K / W)	U_{floor} Btu/ft^2 ·hr ·°F (W/m^2 K)	ψ_{floor} Btu/ft^2 ·hr ·°F (W/m^2 K)
R-10.6 (1.88)	0.094 (0.53)	0.030 (0.052)
R-13.2 (2.32)	0.076 (0.43)	0.029 (0.051)
R-15.9 (2.81)	0.063 (0.36)	0.026 (0.045)
R-18.5 (3.27)	0.054 (0.31)	0.023 (0.040)

Window Transition Transmittance

Exterior Insulation 1D R-Value (RSI)	R_t ft^2·hr·°F / Btu (m^2 K / W)	U_t Btu/ft^2 ·hr ·°F (W/m^2 K)	ψ_{Head} Btu/ft ·hr ·°F (W/m K)	ψ_{Sill} Btu/ft ·hr ·°F (W/m K)	ψ_{Jamb} Btu/ft ·hr ·°F (W/m K)	ψ_{Total} Btu/ft ·hr ·°F (W/m K)
R-10 (1.76)	R-8.1 (1.43)	0.123 (0.70)	0.041 (0.071)	0.013 (0.023)	0.035 (0.060)	0.029 (0.050)
R-15 (2.64)	R-9.1 (1.60)	0.110 (0.62)	0.043 (0.074)	0.026 (0.044)	0.040 (0.069)	0.033 (0.058)
R-20 (3.52)	R-9.9 (1.74)	0.101 (0.58)	0.047 (0.082)	0.033 (0.058)	0.044 (0.077)	0.042 (0.072)
R-25 (4.40)	R-10.5 (1.85)	0.095 (0.54)	0.052 (0.090)	0.035 (0.061)	0.046 (0.080)	0.047 (0.081)

Temperature Indices

	R10	R15	R20	R25	
T_{i1}	0.77	0.77	0.77	0.78	Min T on window frame, at bottom corner at edge of glass
T_{i2}	0.85	0.88	0.90	0.91	Max T on interior surface of sheathing, along bottom track
T_{i3}	0.73	0.74	0.76	0.77	Min T on interior surface of sheathing, at bracket

Detail 5.3.13

Exterior and Interior Insulated 6" x 1 5/8" Steel Stud (16" o.c.) Wall Assembly with Thermally Isolated Vertical Brackets and Rail System (24" o.c.) Supporting Metal Cladding – Triple Glazed Aluminum Curtain Wall & Intermediate Floor Intersection with Window Thermal Break Positioned in the Exterior Insulation

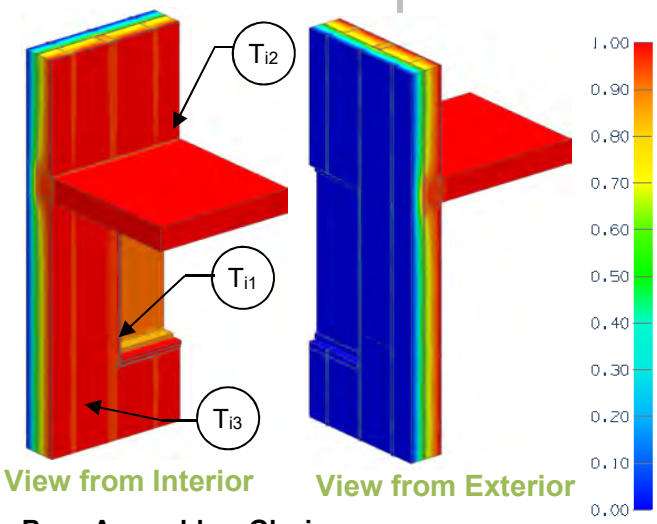

Base Assembly – Glazing

$U_{centre\ of\ glass}$ Btu/ft² ·hr ·°F (W/m² K)	U_g Btu/ft² ·hr ·°F (W/m² K)
0.142 (0.81)	0.199 (1.13)

Thermal Performance Indicators

Assembly 1D (Nominal) R-Value	R_{1D}	R-21.3 (3.75 RSI) + exterior insulation
Transmittance / Resistance without Anomaly	U_w, R_w, U_g,	"clear wall" U- and R-value: w = wall without intermediate floor g = glazing
Transmittance / Resistance	U_{floor}, R_{floor}, U_t, R_t	U and R-values for: floor = wall + intermediate floor t = combined wall + floor + window
Surface Temperature Index[1]	T_i	0 = exterior temperature 1 = interior temperature
Linear Transmittance	ψ	Incremental increase in transmittance per linear length

[1]Assumptions and limitations for surface temperatures identified in ASHRAE 1365-RP

Nominal (1D) vs. Assembly Performance Indicators

Base Assembly – Steel Stud Clear Wall

Exterior Insulation 1D R-Value (RSI)	R_{1D} ft²·hr·°F / Btu (m² K / W)	R_w ft²·hr·°F / Btu (m² K / W)	U_w Btu/ft² ·hr ·°F (W/m² K)
R-10 (1.76)	R-31.3 (5.51)	R-19.2 (3.38)	0.052 (0.30)
R-15 (2.64)	R-36.3 (6.39)	R-21.8 (3.83)	0.046 (0.26)
R-20 (3.52)	R-41.3 (7.28)	R-24.8 (4.37)	0.040 (0.23)
R-25 (4.40)	R-46.3 (8.15)	R-27.6 (4.86)	0.036 (0.21)

Intermediate Floor Linear Transmittance

R_{floor} ft²·hr·°F / Btu (m² K / W)	U_{floor} Btu/ft² ·hr ·°F (W/m² K)	ψ_{floor} Btu/ft² ·hr ·°F (W/m² K)
R-16.1 (2.83)	0.062 (0.35)	0.071 (0.122)
R-18.5 (3.26)	0.054 (0.31)	0.056 (0.098)
R-21.3 (3.75)	0.047 (0.27)	0.046 (0.080)
R-23.9 (4.21)	0.042 (0.24)	0.040 (0.068)

Window Transition Transmittance

Exterior Insulation 1D R-Value (RSI)	R_t ft²·hr·°F / Btu (m² K / W)	U_t Btu/ft² ·hr ·°F (W/m² K)	ψ_{Head} Btu/ft ·hr ·°F (W/m K)	ψ_{Sill} Btu/ft ·hr ·°F (W/m K)	ψ_{Jamb} Btu/ft ·hr ·°F (W/m K)	ψ_{Total} Btu/ft ·hr ·°F (W/m K)
R-10 (1.76)	R-8.1 (1.43)	0.123 (0.70)	0.036 (0.063)	0.028 (0.048)	0.046 (0.080)	0.042 (0.073)
R-15 (2.64)	R-9.1 (1.60)	0.110 (0.62)	0.040 (0.069)	0.031 (0.053)	0.047 (0.081)	0.043 (0.074)
R-20 (3.52)	R-9.9 (1.74)	0.101 (0.58)	0.044 (0.076)	0.033 (0.058)	0.048 (0.083)	0.047 (0.082)
R-25 (4.40)	R-10.5 (1.85)	0.095 (0.54)	0.048 (0.083)	0.033 (0.058)	0.047 (0.082)	0.050 (0.086)

Temperature Indices

	R10	R15	R20	R25	
T_{i1}	0.76	0.76	0.76	0.75	Min T on window frame, at bottom corner at edge of glass
T_{i2}	0.76	0.79	0.82	0.84	Max T on interior surface of sheathing, along bottom track
T_{i3}	0.41	0.44	0.48	0.51	Min T on interior surface of sheathing, between studs

Detail 5.3.14

Owens Corning Exterior Insulated 6” x 1 5/8” Steel Stud (16” o.c.) Wall Assembly with Thermally Isolated Vertical Brackets and Rail System (24” o.c.) Supporting Metal Cladding – Double Glazed Aluminum Window and Intermediate Floor Intersection

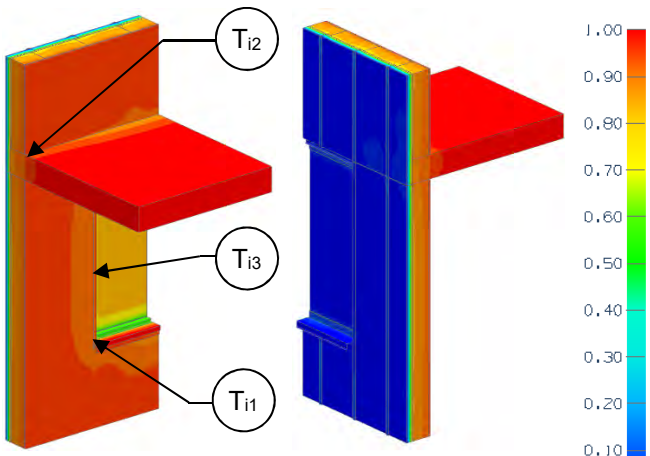

View from Interior View from Exterior

Base Assembly – Glazing

$U_{centre\ of\ glass}$ Btu/ft^2 ·hr ·°F (W/m^2 K)	U_g Btu/ft^2 ·hr ·°F (W/m^2 K)
0.321 (1.82)	0.396 (2.25)

Thermal Performance Indicators

Assembly 1D (Nominal) R-Value	R_{1D}	R-3.3 (0.58 RSI) + exterior insulation
Transmittance / Resistance without Anomaly	U_w, R_w, U_g,	“clear wall” U- and R-value: w = wall without intermediate floor g = glazing
Transmittance / Resistance	U_{floor}, R_{floor}, U_t, R_t	U and R-values for: floor = wall + intermediate floor t = combined wall + floor + window
Surface Temperature Index[1]	T_i	0 = exterior temperature 1 = interior temperature
Linear Transmittance	ψ	Incremental increase in transmittance per linear length

[1]Assumptions and limitations for surface temperatures identified in ASHRAE 1365-RP

Nominal (1D) vs. Assembly Performance Indicators

Base Assembly – Steel Stud Clear Wall

Exterior Insulation 1D R-Value (RSI)	R_{1D} ft^2·hr·°F / Btu (m^2 K / W)	R_w ft^2·hr·°F / Btu (m^2 K / W)	U_w Btu/ft^2 ·hr ·°F (W/m^2 K)
R-8.4 (1.48)	R-11.7 (2.06)	R-10.0 (1.77)	0.100 (0.57)
R-21.0 (3.70)	R-24.3 (4.28)	R-17.6 (3.10)	0.057 (0.32)

Intermediate Floor Linear Transmittance

R_{floor} ft^2·hr·°F / Btu (m^2 K / W)	U_{floor} Btu/ft^2 ·hr ·°F (W/m^2 K)	ψ_{floor} Btu/ft^2 ·hr ·°F (W/m^2 K)
R-9.7 (1.72)	0.103 (0.58)	0.020 (0.034)
R-17.0 (3.00)	0.059 (0.33)	0.013 (0.023)

Window Transition Transmittance

Exterior Insulation 1D R-Value (RSI)	R_t ft^2·hr·°F / Btu (m^2 K / W)	U_t Btu/ft^2 ·hr ·°F (W/m^2 K)	ψ_{Head} Btu/ft ·hr ·°F (W/m K)	ψ_{Sill} Btu/ft ·hr ·°F (W/m K)	ψ_{Jamb} Btu/ft ·hr ·°F (W/m K)	ψ_{Total} Btu/ft ·hr ·°F (W/m K)
R-8.4 (1.48)	R-4.8 (0.84)	0.210 (1.19)	0.276 (0.478)	0.215 (0.373)	0.124 (0.214)	0.182 (0.315)
R-21.0 (3.70)	R-5.4 (0.96)	0.184 (1.04)	0.298 (0.516)	0.248 (0.429)	0.143 (0.248)	0.216 (0.374)

Temperature Indices

	R8.4	R21	
T_{i1}	0.54	0.57	Min T on window frame, at bottom corner at edge of glass
T_{i2}	0.83	0.89	Max T on interior surface of sheathing, along bottom track
T_{i3}	0.37	0.38	Min T on interior surface of sheathing, at bracket along jamb

Detail 5.3.15

Exterior and Interior Insulated 6” x 1 5/8” Steel Stud (16” o.c.) Wall Assembly with Thermally Isolated Vertical Brackets and Rail System (24” o.c.) Supporting Metal Cladding and Owens Corning R-20 Batt in Stud Cavity – Double Glazed Aluminum Window and Intermediate Floor Intersection

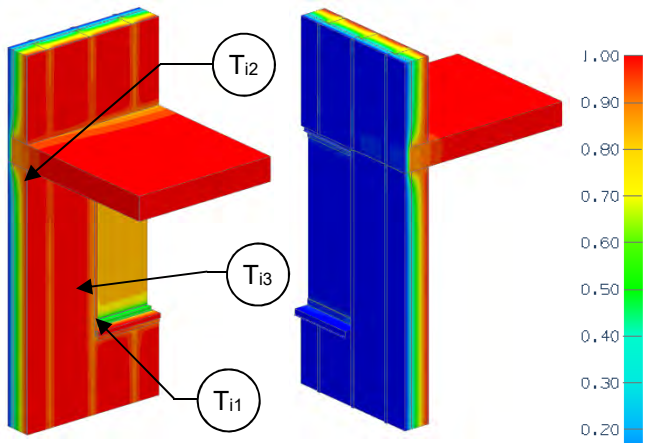

View from Interior View from Exterior

Thermal Performance Indicators

Assembly 1D (Nominal) R-Value	R_{1D}	R-22.4 (3.94 RSI) + exterior insulation
Transmittance / Resistance without Anomaly	U_w, R_w, U_g,	“clear wall” U- and R-value: w = wall without intermediate floor g = glazing
Transmittance / Resistance	U_{floor}, R_{floor}, U_t, R_t	U and R-values for: floor = wall + intermediate floor t = combined wall + floor + window
Surface Temperature Index[1]	T_i	0 = exterior temperature 1 = interior temperature
Linear Transmittance	ψ	Incremental increase in transmittance per linear length

[1]Assumptions and limitations for surface temperatures identified in ASHRAE 1365-RP

Base Assembly – Glazing

$U_{centre\ of\ glass}$ Btu/ft^2 ·hr ·°F (W/m^2 K)	U_g Btu/ft^2 ·hr ·°F (W/m^2 K)
0.321 (1.82)	0.396 (2.25)

Nominal (1D) vs. Assembly Performance Indicators

Base Assembly – Steel Stud Clear Wall

Exterior Insulation 1D R-Value (RSI)	R_{1D} ft^2·hr·°F / Btu (m^2 K / W)	R_w ft^2·hr·°F / Btu (m^2 K / W)	U_w Btu/ft^2 ·hr ·°F (W/m^2 K)
R-8.4 (1.48)	R-30.8 (5.42)	R-18.3 (3.23)	0.055 (0.31)
R-21.0 (3.70)	R-43.4 (7.64)	R-25.8 (4.54)	0.039 (0.22)

Intermediate Floor Linear Transmittance

R_{floor} ft^2·hr·°F / Btu (m^2 K / W)	U_{floor} Btu/ft^2 ·hr ·°F (W/m^2 K)	ψ_{floor} Btu/ft^2 ·hr ·°F (W/m^2 K)
R-15.3 (2.69)	0.065 (0.37)	0.076 (0.132)
R-22.5 (3.96)	0.045 (0.25)	0.040 (0.069)

Window Transition Transmittance

Exterior Insulation 1D R-Value (RSI)	R_t ft^2·hr·°F / Btu (m^2 K / W)	U_t Btu/ft^2 ·hr ·°F (W/m^2 K)	ψ_{Head} Btu/ft ·hr ·°F (W/m K)	ψ_{Sill} Btu/ft ·hr ·°F (W/m K)	ψ_{Jamb} Btu/ft ·hr ·°F (W/m K)	ψ_{Total} Btu/ft ·hr ·°F (W/m K)
R-8.4 (1.48)	R-5.8 (1.02)	0.173 (0.99)	0.308 (0.533)	0.146 (0.253)	0.094 (0.163)	0.159 (0.274)
R-21.0 (3.70)	R-6.2 (1.10)	0.161 (0.91)	0.303 (0.525)	0.158 (0.273)	0.102 (0.176)	0.164 (0.283)

Temperature Indices

	R8.4	R21	
T_{i1}	0.50	0.50	Min T on window frame, at bottom corner at edge of glass
T_{i2}	0.80	0.86	Max T on interior surface of sheathing, along bottom track
T_{i3}	0.28	0.28	Min T on interior surface of sheathing, at bracket along jamb

Detail 5.3.16

Exterior and Interior Insulated 6” x 1 5/8” Steel Stud (16” o.c.) Wall Assembly with Thermally Isolated Vertical Brackets and Rail System (24” o.c.) Supporting Metal Cladding and Owens Corning R-22.5 Batt in Stud Cavity – Double Glazed Aluminum Window and Intermediate Floor Intersection

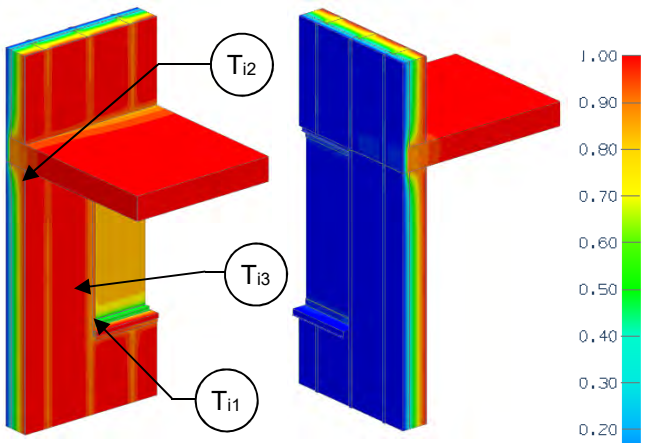

View from Interior View from Exterior

Thermal Performance Indicators

Assembly 1D (Nominal) R-Value	R_{1D}	R-24.9 (4.38 RSI) + exterior insulation
Transmittance / Resistance without Anomaly	U_w, R_w, U_g,	“clear wall” U- and R-value: w = wall without intermediate floor g = glazing
Transmittance / Resistance	U_{floor}, R_{floor}, U_t, R_t	U and R-values for: floor = wall + intermediate floor t = combined wall + floor + window
Surface Temperature Index[1]	T_i	0 = exterior temperature 1 = interior temperature
Linear Transmittance	ψ	Incremental increase in transmittance per linear length

[1]Assumptions and limitations for surface temperatures identified in ASHRAE 1365-RP

Base Assembly – Glazing

$U_{centre\ of\ glass}$ Btu/ft^2 ·hr ·°F (W/m^2 K)	U_g Btu/ft^2 ·hr ·°F (W/m^2 K)
0.321 (1.82)	0.396 (2.25)

Nominal (1D) vs. Assembly Performance Indicators

Base Assembly – Steel Stud Clear Wall

Exterior Insulation 1D R-Value (RSI)	R_{1D} ft^2·hr·°F / Btu (m^2 K / W)	R_w ft^2·hr·°F / Btu (m^2 K / W)	U_w Btu/ft^2 ·hr ·°F (W/m^2 K)
R-8.4 (1.48)	R-33.3 (5.86)	R-19.0 (3.34)	0.053 (0.30)
R-21.0 (3.70)	R-45.9 (8.08)	R-26.4 (4.64)	0.038 (0.22)

Intermediate Floor Linear Transmittance

R_{floor} ft^2·hr·°F / Btu (m^2 K / W)	U_{floor} Btu/ft^2 ·hr ·°F (W/m^2 K)	ψ_{floor} Btu/ft^2 ·hr ·°F (W/m^2 K)
R-15.6 (2.75)	0.064 (0.36)	0.079 (0.136)
R-22.8 (4.02)	0.044 (0.25)	0.041 (0.071)

Window Transition Transmittance

Exterior Insulation 1D R-Value (RSI)	R_t ft^2·hr·°F / Btu (m^2 K / W)	U_t Btu/ft^2 ·hr ·°F (W/m^2 K)	ψ_{Head} Btu/ft ·hr ·°F (W/m K)	ψ_{Sill} Btu/ft ·hr ·°F (W/m K)	ψ_{Jamb} Btu/ft ·hr ·°F (W/m K)	ψ_{Total} Btu/ft ·hr ·°F (W/m K)
R-8.4 (1.48)	R-5.8 (1.02)	0.172 (0.98)	0.310 (0.536)	0.146 (0.252)	0.094 (0.163)	0.159 (0.275)
R-21.0 (3.70)	R-6.3 (1.10)	0.160 (0.91)	0.304 (0.526)	0.157 (0.271)	0.101 (0.175)	0.163 (0.282)

Temperature Indices

	R8.4	R21	
T_{i1}	0.50	0.50	Min T on window frame, at bottom corner at edge of glass
T_{i2}	0.79	0.86	Max T on interior surface of sheathing, along bottom track
T_{i3}	0.27	0.28	Min T on interior surface of sheathing, at bracket along jamb

Detail 5.3.17

Owens Corning Exterior Insulated 6” x 1 5/8” Steel Stud (16” o.c.) Wall Assembly with Thermally Isolated Vertical Brackets and Rail System (24” o.c.) Supporting Metal Cladding – Triple Glazed Aluminum Window and Intermediate Floor Intersection

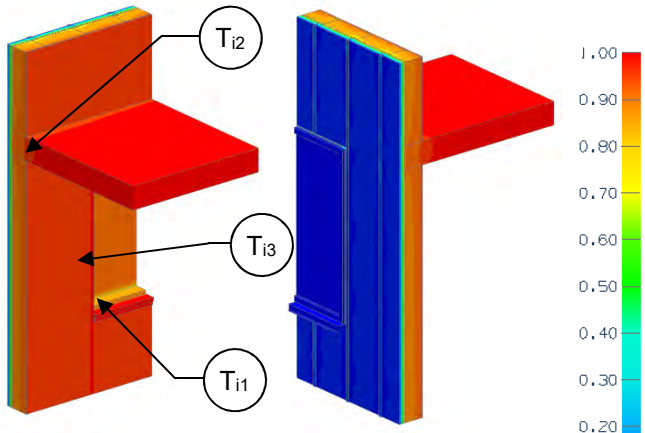

View from Interior View from Exterior

Thermal Performance Indicators

Assembly 1D (Nominal) R-Value	R_{1D}	R-3.3 (0.58 RSI) + exterior insulation
Transmittance / Resistance without Anomaly	U_w, R_w, U_g,	“clear wall” U- and R-value: w = wall without intermediate floor g = glazing
Transmittance / Resistance	U_{floor}, R_{floor}, U_t, R_t	U and R-values for: floor = wall + intermediate floor t = combined wall + floor + window
Linear Transmittance	ψ	Incremental increase in transmittance per linear length

[1]Assumptions and limitations for surface temperatures identified in ASHRAE 1365-RP

Base Assembly – Glazing

$U_{centre\ of\ glass}$ Btu/ft^2 ·hr ·°F (W/m^2 K)	U_g Btu/ft^2 ·hr ·°F (W/m^2 K)
0.220 (1.25)	0.208 (1.18)

Nominal (1D) vs. Assembly Performance Indicators

Base Assembly – Steel Stud Clear Wall

Exterior Insulation 1D R-Value (RSI)	R_{1D} ft^2·hr·°F / Btu (m^2 K / W)	R_w ft^2·hr·°F / Btu (m^2 K / W)	U_w Btu/ft^2 ·hr ·°F (W/m^2 K)
R-8.4 (1.48)	R-11.7 (2.06)	R-10.0 (1.77)	0.100 (0.57)
R-21.0 (3.70)	R-24.3 (4.28)	R-17.6 (3.10)	0.057 (0.32)

Intermediate Floor Linear Transmittance

R_{floor} ft^2·hr·°F / Btu (m^2 K / W)	U_{floor} Btu/ft^2 ·hr ·°F (W/m^2 K)	ψ_{floor} Btu/ft^2 ·hr ·°F (W/m^2 K)
R-9.7 (1.72)	0.103 (0.58)	0.020 (0.034)
R-17.0 (3.00)	0.059 (0.33)	0.013 (0.023)

Window Transition Transmittance

Exterior Insulation 1D R-Value (RSI)	R_t ft^2·hr·°F / Btu (m^2 K / W)	U_t Btu/ft^2 ·hr ·°F (W/m^2 K)	ψ_{Head} Btu/ft ·hr ·°F (W/m K)	ψ_{Sill} Btu/ft ·hr ·°F (W/m K)	ψ_{Jamb} Btu/ft ·hr ·°F (W/m K)	ψ_{Total} Btu/ft ·hr ·°F (W/m K)
R-8.4 (1.48)	R-7.5 (1.32)	0.133 (0.76)	0.050 (0.086)	0.033 (0.057)	0.043 (0.075)	0.033 (0.056)
R-21.0 (3.70)	R-9.4 (1.65)	0.107 (0.61)	0.045 (0.078)	0.052 (0.090)	0.047 (0.082)	0.062 (0.107)

Temperature Indices

	R8.4	R21	
T_{i1}	0.71	0.71	Min T on window frame, at bottom corner at edge of glass
T_{i2}	0.86	0.91	Max T on interior surface of sheathing, along bottom track
T_{i3}	0.69	0.66	Min T on interior surface of sheathing, at bracket along jamb

Detail 5.3.18

Exterior and Interior Insulated 6” x 1 5/8” Steel Stud (16” o.c.) Wall Assembly with Thermally Isolated Vertical Brackets and Rail System (24” o.c.) Supporting Metal Cladding and Owens Corning R-20 Batt in Stud Cavity – Triple Glazed Aluminum Window and Intermediate Floor Intersection

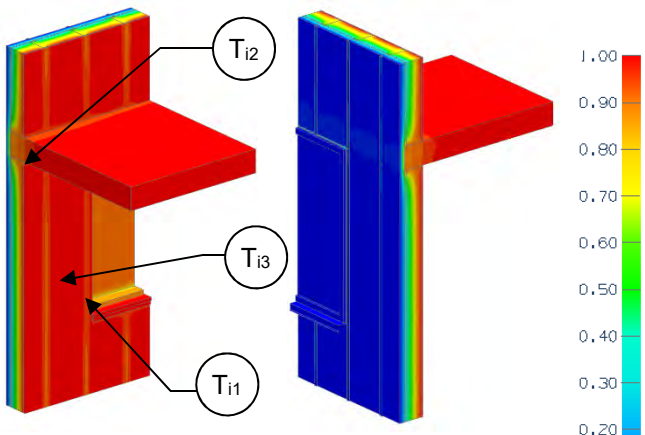

View from Interior View from Exterior

Thermal Performance Indicators

Assembly 1D (Nominal) R-Value	R_{1D}	R-22.4 (3.94 RSI) + exterior insulation
Transmittance / Resistance without Anomaly	U_w, R_w, U_g,	“clear wall” U- and R-value: w = wall without intermediate floor g = glazing
Transmittance / Resistance	U_{floor}, R_{floor}, U_t, R_t	U and R-values for: floor = wall + intermediate floor t = combined wall + floor + window
Linear Transmittance	ψ	Incremental increase in transmittance per linear length

[1]Assumptions and limitations for surface temperatures identified in ASHRAE 1365-RP

Base Assembly – Glazing

$U_{centre\ of\ glass}$ Btu/ft^2 ·hr ·°F (W/m^2 K)	U_g Btu/ft^2 ·hr ·°F (W/m^2 K)
0.220 (1.25)	0.208 (1.18)

Nominal (1D) vs. Assembly Performance Indicators

Base Assembly – Steel Stud Clear Wall

Exterior Insulation 1D R-Value (RSI)	R_{1D} ft^2·hr·°F / Btu (m^2 K / W)	R_w ft^2·hr·°F / Btu (m^2 K / W)	U_w Btu/ft^2 ·hr ·°F (W/m^2 K)
R-8.4 (1.48)	R-30.8 (5.42)	R-18.3 (3.23)	0.055 (0.31)
R-21.0 (3.70)	R-43.4 (7.64)	R-25.8 (4.54)	0.039 (0.22)

Intermediate Floor Linear Transmittance

R_{floor} ft^2·hr·°F / Btu (m^2 K / W)	U_{floor} Btu/ft^2 ·hr ·°F (W/m^2 K)	ψ_{floor} Btu/ft^2 ·hr ·°F (W/m^2 K)
R-15.3 (2.69)	0.065 (0.37)	0.076 (0.132)
R-22.5 (3.96)	0.045 (0.25)	0.040 (0.069)

Window Transition Transmittance

Exterior Insulation 1D R-Value (RSI)	R_t ft^2·hr·°F / Btu (m^2 K / W)	U_t Btu/ft^2 ·hr ·°F (W/m^2 K)	ψ_{Head} Btu/ft ·hr ·°F (W/m K)	ψ_{Sill} Btu/ft ·hr ·°F (W/m K)	ψ_{Jamb} Btu/ft ·hr ·°F (W/m K)	ψ_{Total} Btu/ft ·hr ·°F (W/m K)
R-8.4 (1.48)	R-9.7 (1.70)	0.103 (0.59)	0.093 (0.162)	0.033 (0.057)	0.045 (0.078)	0.044 (0.077)
R-21.0 (3.70)	R-10.9 (1.92)	0.092 (0.52)	0.063 (0.109)	0.043 (0.075)	0.043 (0.075)	0.052 (0.091)

Temperature Indices

	R8.4	R21	
T_{i1}	0.70	0.70	Min T on window frame, at bottom corner at edge of glass
T_{i2}	0.84	0.89	Max T on interior surface of sheathing, along bottom track
T_{i3}	0.36	0.47	Min T on interior surface of sheathing, between studs

Detail 5.3.19

Exterior and Interior Insulated 6” x 1 5/8” Steel Stud (16” o.c.) Wall Assembly with Thermally Isolated Vertical Brackets and Rail System (24” o.c.) Supporting Metal Cladding and Owens Corning R-22.5 Batt in Stud Cavity – Triple Glazed Aluminum Window and Intermediate Floor Intersection

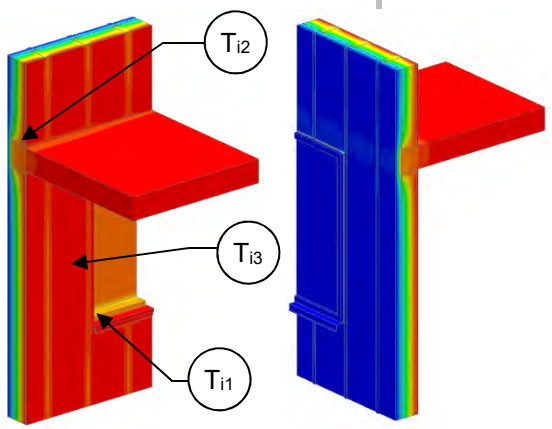

View from Interior View from Exterior

Thermal Performance Indicators

Assembly 1D (Nominal) R-Value	R_{1D}	R-24.9 (4.38 RSI) + exterior insulation
Transmittance / Resistance without Anomaly	U_w, R_w, U_g,	“clear wall” U- and R-value: w = wall without intermediate floor g = glazing
Transmittance / Resistance	U_{floor}, R_{floor}, U_t, R_t	U and R-values for: floor = wall + intermediate floor t = combined wall + floor + window
Linear Transmittance	ψ	Incremental increase in transmittance per linear length

[1]Assumptions and limitations for surface temperatures identified in ASHRAE 1365-RP

Base Assembly – Glazing

$U_{centre\ of\ glass}$ Btu/ft^2 ·hr ·°F (W/m^2 K)	U_g Btu/ft^2 ·hr ·°F (W/m^2 K)
0.220 (1.25)	0.208 (1.18)

Nominal (1D) vs. Assembly Performance Indicators

Base Assembly – Steel Stud Clear Wall

Exterior Insulation 1D R-Value (RSI)	R_{1D} ft^2·hr·°F / Btu (m^2 K / W)	R_w ft^2·hr·°F / Btu (m^2 K / W)	U_w Btu/ft^2 ·hr ·°F (W/m^2 K)
R-8.4 (1.48)	R-33.3 (5.86)	R-19.0 (3.34)	0.053 (0.30)
R-21.0 (3.70)	R-45.9 (8.08)	R-26.4 (4.64)	0.038 (0.22)

Intermediate Floor Linear Transmittance

R_{floor} ft^2·hr·°F / Btu (m^2 K / W)	U_{floor} Btu/ft^2 ·hr ·°F (W/m^2 K)	ψ_{floor} Btu/ft^2 ·hr ·°F (W/m^2 K)
R-15.6 (2.75)	0.064 (0.36)	0.079 (0.136)
R-22.8 (4.02)	0.044 (0.25)	0.041 (0.071)

Window Transition Transmittance

Exterior Insulation 1D R-Value (RSI)	R_t ft^2·hr·°F / Btu (m^2 K / W)	U_t Btu/ft^2 ·hr ·°F (W/m^2 K)	ψ_{Head} Btu/ft ·hr ·°F (W/m K)	ψ_{Sill} Btu/ft ·hr ·°F (W/m K)	ψ_{Jamb} Btu/ft ·hr ·°F (W/m K)	ψ_{Total} Btu/ft ·hr ·°F (W/m K)
R-8.4 (1.48)	R-9.7 (1.70)	0.103 (0.59)	0.095 (0.165)	0.033 (0.057)	0.045 (0.079)	0.045 (0.078)
R-21.0 (3.70)	R-10.9 (1.92)	0.092 (0.52)	0.064 (0.111)	0.045 (0.078)	0.043 (0.075)	0.053 (0.091)

Temperature Indices

	R8.4	R21	
T_{i1}	0.70	0.70	Min T on window frame, at bottom corner at edge of glass
T_{i2}	0.84	0.89	Max T on interior surface of sheathing, along bottom track
T_{i3}	0.34	0.46	Min T on interior surface of sheathing, between studs

Detail 5.3.20

Exterior Insulated 6” x 1 5/8” Steel Stud (16” o.c.) Wall Assembly with FRP and Thermally Broken Vertical Brackets and Rail System Supporting Metal Cladding – Triple Glazed Vinyl Window and Intermediate Floor Intersection

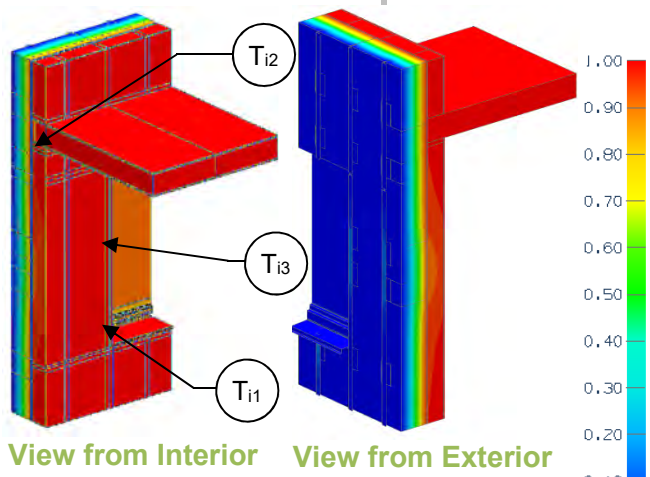

Thermal Performance Indicators

Assembly 1D (Nominal) R-Value	R_{1D}	R-3.2 (0.56 RSI) + exterior insulation
Transmittance / Resistance without Anomaly	U_w, R_w, U_g,	“clear wall” U- and R-value: w = wall without intermediate floor g = glazing
Transmittance / Resistance	U_{floor}, R_{floor}, U_t, R_t	U and R-values for: floor = wall + intermediate floor t = combined wall + floor + window
Linear Transmittance	ψ	Incremental increase in transmittance per linear length

[1]Assumptions and limitations for surface temperatures identified in ASHRAE 1365-RP

Base Assembly – Glazing

$U_{centre\ of\ glass}$ Btu/ft^2 ·hr ·°F (W/m^2 K)	U_g Btu/ft^2 ·hr ·°F (W/m^2 K)
0.126 (0.72)	0.178 (1.01)

Scenario

Scenario	
A	With support bracket
B	Without support bracket

Nominal (1D) vs. Assembly Performance Indicators

Base Assembly – Steel Stud Clear Wall

Exterior Insulation 1D R-Value (RSI)	R_{1D} ft^2·hr·°F / Btu (m^2 K / W)	R_w ft^2·hr·°F / Btu (m^2 K / W)	U_w Btu/ft^2 ·hr ·°F (W/m^2 K)
R-42 (7.40)	R-45.2 (7.96)	R-40.0 (7.04)	0.025 (0.14)

Intermediate Floor Linear Transmittance

R_{floor} ft^2·hr·°F / Btu (m^2 K / W)	U_{floor} Btu/ft^2 ·hr ·°F (W/m^2 K)	ψ_{floor} Btu/ft^2 ·hr ·°F (W/m^2 K)
R-39.5 (6.96)	0.025 (0.14)	0.002 (0.003)

Window Transition Transmittance

Scenario	R_t ft^2·hr·°F / Btu (m^2 K / W)	U_t Btu/ft^2 ·hr ·°F (W/m^2 K)	ψ_{Head} Btu/ft ·hr ·°F (W/m K)	ψ_{Sill} Btu/ft ·hr ·°F (W/m K)	ψ_{Jamb} Btu/ft ·hr ·°F (W/m K)	ψ_{Total} Btu/ft ·hr ·°F (W/m K)
A	R-11.7 (2.06)	0.085 (0.49)	0.026 (0.046)	0.048 (0.083)	0.051 (0.088)	0.045 (0.078)
B	R-11.8 (2.07)	0.085 (0.48)	0.026 (0.046)	0.036 (0.062)	0.051 (0.088)	0.043 (0.074)

Temperature Indices

	A	B	
T_{i1}	0.62	0.62	Min T on window frame, at bottom corner at edge of glass
T_{i2}	0.97	0.97	Max T on interior surface of sheathing, along top track
T_{i3}	0.77	0.77	Min T on interior surface of sheathing, at bracket along jamb

Detail 5.3.21

Exterior Insulated 6” x 1 5/8” Steel Stud (16” o.c.) Wall Assembly with FRP and Thermally Broken Vertical Brackets and Rail System Supporting Metal Cladding with Aerogel Insulation Blanket – Triple Glazed Vinyl Window and Intermediate Floor Intersection

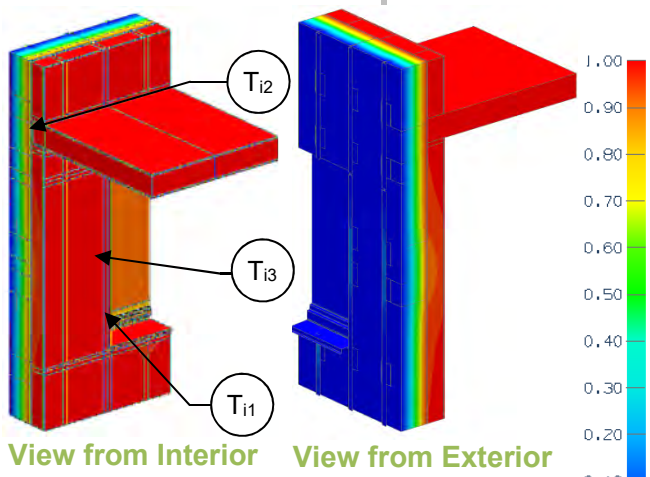

Thermal Performance Indicators

Assembly 1D (Nominal) R-Value	R_{1D}	R-3.2 (0.56 RSI) + exterior insulation
Transmittance / Resistance without Anomaly	U_w, R_w, U_g,	“clear wall” U- and R-value: w = wall without intermediate floor g = glazing
Transmittance / Resistance	U_{floor}, R_{floor}, U_t, R_t	U and R-values for: floor = wall + intermediate floor t = combined wall + floor + window
Linear Transmittance	ψ	Incremental increase in transmittance per linear length

[1]Assumptions and limitations for surface temperatures identified in ASHRAE 1365-RP

Base Assembly – Glazing

$U_{centre\ of\ glass}$ Btu/ft^2 ·hr ·ºF (W/m^2 K)	U_g Btu/ft^2 ·hr ·ºF (W/m^2 K)
0.126 (0.72)	0.178 (1.01)

Scenario

Scenario	
A	With support bracket
B	Without support bracket

Nominal (1D) vs. Assembly Performance Indicators

Base Assembly – Steel Stud Clear Wall

Exterior Insulation 1D R-Value (RSI)	R_{1D} ft^2·hr·ºF / Btu (m^2 K / W)	R_w ft^2·hr·ºF / Btu (m^2 K / W)	U_w Btu/ft^2 ·hr ·ºF (W/m^2 K)
R-42 (7.40)	R-45.2 (7.96)	R-40.0 (7.04)	0.025 (0.14)

Intermediate Floor Linear Transmittance

R_{floor} ft^2·hr·ºF / Btu (m^2 K / W)	U_{floor} Btu/ft^2 ·hr ·ºF (W/m^2 K)	ψ_{floor} Btu/ft^2 ·hr ·ºF (W/m^2 K)
R-39.5 (6.96)	0.025 (0.14)	0.002 (0.003)

Window Transition Transmittance

Scenario	R_t ft^2·hr·ºF / Btu (m^2 K / W)	U_t Btu/ft^2 ·hr ·ºF (W/m^2 K)	ψ_{Head} Btu/ft ·hr ·ºF (W/m K)	ψ_{Sill} Btu/ft ·hr ·ºF (W/m K)	ψ_{Jamb} Btu/ft ·hr ·ºF (W/m K)	ψ_{Total} Btu/ft ·hr ·ºF (W/m K)
A	R-12.0 (2.11)	0.084 (0.48)	0.020 (0.035)	0.044 (0.075)	0.029 (0.051)	0.035 (0.061)
B	R-12.0 (2.12)	0.083 (0.47)	0.020 (0.035)	0.030 (0.052)	0.029 (0.051)	0.032 (0.056)

Temperature Indices

	A	B	
T_{i1}	0.62	0.61	Min T on window frame, at bottom corner at edge of glass
T_{i2}	0.96	0.96	Max T on interior surface of sheathing, along top track
T_{i3}	0.73	0.73	Min T on interior surface of sheathing, at bracket along jamb

Detail 5.3.22

Exterior and Interior Insulated 6” x 1 5/8” Steel Stud (16” o.c.) Wall Assembly with FRP and Thermally Broken Vertical Brackets and Rail System Supporting Metal Cladding and R-19 Batt in Stud Cavity – Triple Glazed Vinyl Window and Intermediate Floor Intersection

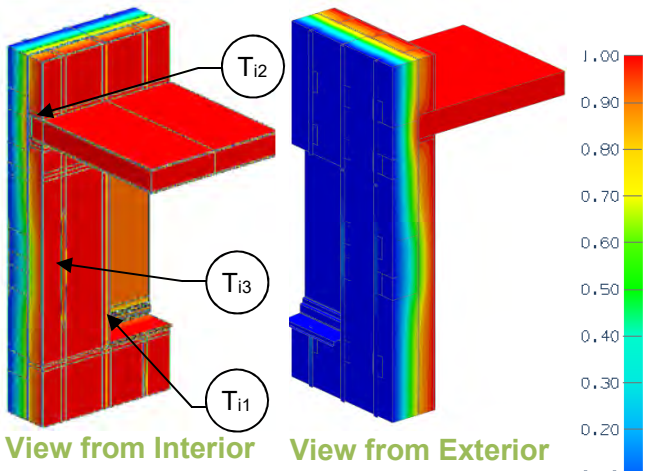

Thermal Performance Indicators

Assembly 1D (Nominal) R-Value	R_{1D}	R-21.3 (3.75 RSI) + exterior insulation
Transmittance / Resistance without Anomaly	U_w, R_w, U_g,	“clear wall” U- and R-value: w = wall without intermediate floor g = glazing
Transmittance / Resistance	U_{floor}, R_{floor}, U_t, R_t	U and R-values for: floor = wall + intermediate floor t = combined wall + floor + window
Linear Transmittance	ψ	Incremental increase in transmittance per linear length

[1]Assumptions and limitations for surface temperatures identified in ASHRAE 1365-RP

Base Assembly – Glazing

$U_{centre\ of\ glass}$ Btu/ft^2 ·hr ·°F (W/m^2 K)	U_g Btu/ft^2 ·hr ·°F (W/m^2 K)
0.126 (0.72)	0.178 (1.01)

Scenario

Scenario	
A	With support bracket
B	Without support bracket

Nominal (1D) vs. Assembly Performance Indicators

Base Assembly – Steel Stud Clear Wall

Exterior Insulation 1D R-Value (RSI)	R_{1D} ft^2·hr·°F / Btu (m^2 K / W)	R_w ft^2·hr·°F / Btu (m^2 K / W)	U_w Btu/ft^2 ·hr ·°F (W/m^2 K)
R-42 (7.40)	R-63.3 (11.15)	R-48.3 (8.51)	0.021 (0.12)

Intermediate Floor Linear Transmittance

R_{floor} ft^2·hr·°F / Btu (m^2 K / W)	U_{floor} Btu/ft^2 ·hr ·°F (W/m^2 K)	ψ_{floor} Btu/ft^2 ·hr ·°F (W/m^2 K)
R-45.0 (7.92)	0.022 (0.13)	0.008 (0.015)

Window Transition Transmittance

Scenario	R_t ft^2·hr·°F / Btu (m^2 K / W)	U_t Btu/ft^2 ·hr ·°F (W/m^2 K)	ψ_{Head} Btu/ft ·hr ·°F (W/m K)	ψ_{Sill} Btu/ft ·hr ·°F (W/m K)	ψ_{Jamb} Btu/ft ·hr ·°F (W/m K)	ψ_{Total} Btu/ft ·hr ·°F (W/m K)
A	R-12.5 (2.21)	0.080 (0.45)	0.027 (0.047)	0.057 (0.099)	0.063 (0.109)	0.053 (0.091)
B	R-12.6 (2.22)	0.079 (0.45)	0.027 (0.047)	0.047 (0.081)	0.063 (0.109)	0.050 (0.087)

Temperature Indices

	A	B	
T_{i1}	0.62	0.61	Min T on window frame, at bottom corner at edge of glass
T_{i2}	0.96	0.96	Max T on interior surface of sheathing, along bottom track
T_{i3}	0.42	0.42	Min T on interior surface of sheathing, at aluminum bracket

Detail 5.3.23

Exterior and Interior Insulated 6” x 1 5/8” Steel Stud (16” o.c.) Wall Assembly with FRP and Thermally Broken Vertical Brackets and Rail System Supporting Metal Cladding with Aerogel Insulation Blanket and R-19 Batt in Stud Cavity– Triple Glazed Vinyl Window and Intermediate Floor Intersection

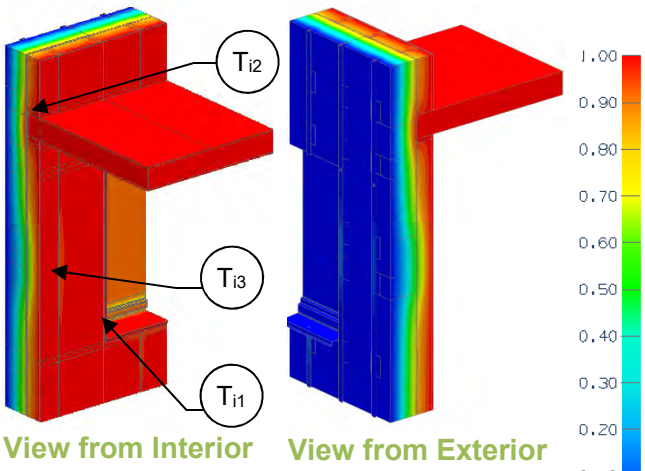

Thermal Performance Indicators

Assembly 1D (Nominal) R-Value	R_{1D}	R-21.3 (3.75 RSI) + exterior insulation
Transmittance / Resistance without Anomaly	U_w, R_w, U_g,	“clear wall” U- and R-value: w = wall without intermediate floor g = glazing
Transmittance / Resistance	U_{floor}, R_{floor}, U_t, R_t	U and R-values for: floor = wall + intermediate floor t = combined wall + floor + window
Linear Transmittance	ψ	Incremental increase in transmittance per linear length

[1]Assumptions and limitations for surface temperatures identified in ASHRAE 1365-RP

Base Assembly – Glazing

$U_{centre\ of\ glass}$ Btu/ft^2 ·hr ·°F (W/m^2 K)	U_g Btu/ft^2 ·hr ·°F (W/m^2 K)
0.126 (0.72)	0.178 (1.01)

Scenario

Scenario	
A	With support bracket
B	Without support bracket

Nominal (1D) vs. Assembly Performance Indicators

Base Assembly – Steel Stud Clear Wall

Exterior Insulation 1D R-Value (RSI)	R_{1D} ft^2·hr·°F / Btu (m^2 K / W)	R_w ft^2·hr·°F / Btu (m^2 K / W)	U_w Btu/ft^2 ·hr ·°F (W/m^2 K)
R-42 (7.40)	R-63.3 (11.15)	R-48.3 (8.51)	0.021 (0.12)

Intermediate Floor Linear Transmittance

R_{floor} ft^2·hr·°F / Btu (m^2 K / W)	U_{floor} Btu/ft^2 ·hr ·°F (W/m^2 K)	ψ_{floor} Btu/ft^2 ·hr ·°F (W/m^2 K)
R-45.0 (7.92)	0.022 (0.13)	0.008 (0.015)

Window Transition Transmittance

Scenario	R_t ft^2·hr·°F / Btu (m^2 K / W)	U_t Btu/ft^2 ·hr ·°F (W/m^2 K)	ψ_{Head} Btu/ft ·hr ·°F (W/m K)	ψ_{Sill} Btu/ft ·hr ·°F (W/m K)	ψ_{Jamb} Btu/ft ·hr ·°F (W/m K)	ψ_{Total} Btu/ft ·hr ·°F (W/m K)
A	R-12.9 (2.28)	0.077 (0.44)	0.021 (0.036)	0.049 (0.084)	0.039 (0.068)	0.040 (0.069)
B	R-13.0 (2.29)	0.077 (0.44)	0.021 (0.036)	0.040 (0.069)	0.039 (0.068)	0.037 (0.065)

Temperature Indices

	A	B	
T_{i1}	0.61	0.61	Min T on window frame, at bottom corner at edge of glass
T_{i2}	0.95	0.95	Max T on interior surface of sheathing, along bottom track
T_{i3}	0.41	0.41	Min T on interior surface of sheathing, at aluminum bracket

Detail 5.4.1

Exterior Insulated 3 5/8" x 1 5/8" Steel Stud (16" o.c.) Drained EIFS Wall Assembly – Conventional Curtain Wall Transition

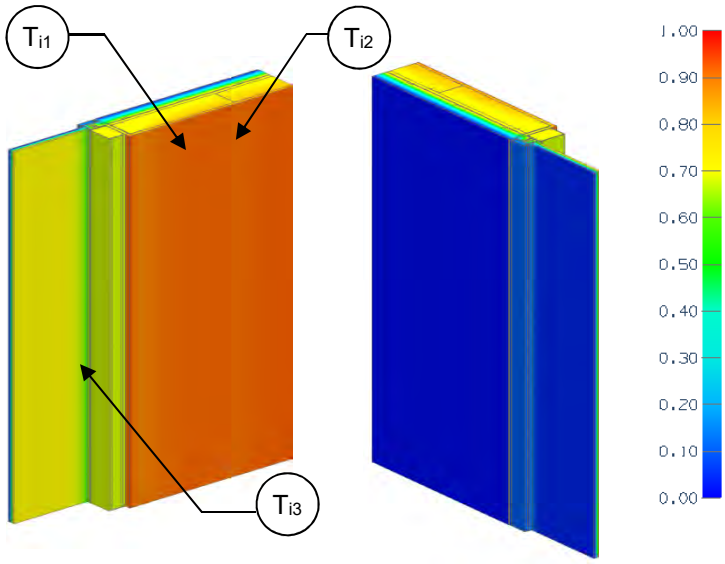

View from Interior View from Exterior

Thermal Performance Indicators

Assembly 1D (Nominal) R-Value	R_{1D}	R-2.7 (0.47 RSI) + exterior insulation
Transmittance / Resistance without Anomaly	U_g, U_w, R_w	"clear wall" U- and R-value for: g = curtain wall glazing w = steel stud assembly
Transmittance / Resistance	U, R	U- and R-values for overall assembly
Surface Temperature Index[1]	T_i	0 = exterior temperature 1 = interior temperature
Linear Transmittance	ψ	Incremental increase in transmittance per linear length of curtain wall transition

[1]Assumptions and limitations for surface temperatures identified in ASHRAE 1365-RP

Nominal (1D) vs. Assembly Performance Indicators

Base Assembly – Wall

Exterior Insulation 1D R-Value (RSI)	R_{1D} ft²·hr·°F / Btu (m² K / W)	R_w ft²·hr·°F / Btu (m² K / W)	U_w Btu/ft² ·hr ·°F (W/m² K)
R-7.5 (1.32)	R-10.2 (1.80)	R-10.0 (1.76)	0.100 (0.57)
R-11.3 (1.98)	R-13.9 (2.46)	R-13.7 (2.41)	0.073 (0.41)
R-15 (2.64)	R-17.7 (3.12)	R-17.4 (3.06)	0.057 (0.33)

Base Assembly – Curtain Wall Glazing

$U_{centre\ of\ glazing}$ Btu/ft² ·hr ·°F (W/m² K)	U_g Btu/ft² ·hr ·°F (W/m² K)
0.321 (1.82)	0.476 (2.7)

Curtain Wall Transition Linear Transmittance

Exterior Insulation 1D R-Value (RSI)	R ft²·hr·°F / Btu (m² K / W)	U Btu/ft² ·hr ·°F (W/m² K)	ψ Btu/ft hr °F (W/m K)
R-7.5 (1.32)	R-4.0 (0.70)	0.250 (1.42)	0.045 (0.079)
R-11.3 (1.98)	R-4.3 (0.75)	0.234 (1.33)	0.049 (0.084)
R-15 (2.64)	R-4.4 (0.78)	0.225 (1.28)	0.051 (0.088)

Temperature Indices

	R7.5	R11.3	R15	
T_{i1}	0.62	0.64	0.65	Min T on sheathing, between studs
T_{i2}	0.81	0.86	0.89	Max T on sheathing, along studs
T_{i3}	0.56	0.56	0.57	Min T on frame, at edge of frame at glass

Detail 5.4.2

Exterior and Interior Insulated 3 5/8" x 1 5/8" Steel Stud (16" o.c.) Drained EIFS Wall Assembly – Conventional Curtain Wall Transition

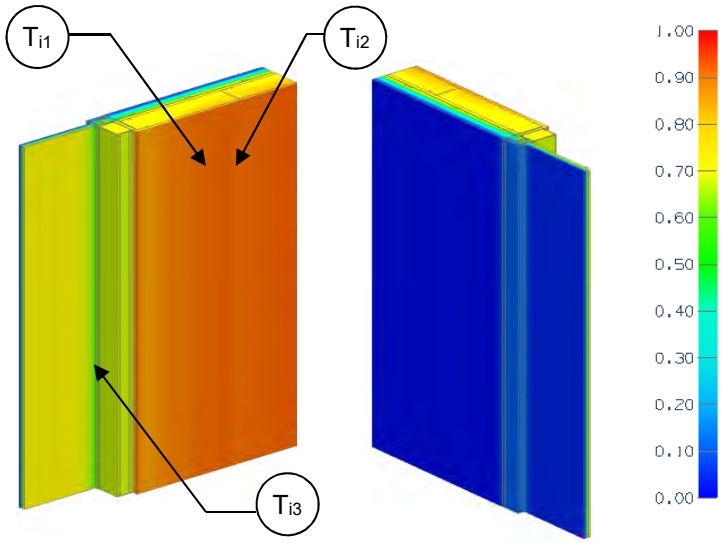

View from Interior View from Exterior

Thermal Performance Indicators

Assembly 1D (Nominal) R-Value	R_{1D}	R-14.2 (2.51 RSI) + exterior insulation
Transmittance / Resistance without Anomaly	U_g, U_w, R_w	"clear wall" U- and R-value for: g= curtain wall glazing w = steel stud assembly
Transmittance / Resistance	U, R	U- and R-values for overall assembly
Surface Temperature Index[1]	T_i	0 = exterior temperature 1 = interior temperature
Linear Transmittance	ψ	Incremental increase in transmittance per linear length of curtain wall transition

[1]Assumptions and limitations for surface temperatures identified in ASHRAE 1365-RP

Nominal (1D) vs. Assembly Performance Indicators

Base Assembly – Wall

Exterior Insulation 1D R-Value (RSI)	R_{1D} ft²·hr·°F / Btu (m² K / W)	R_w ft²·hr·°F / Btu (m² K / W)	U_w Btu/ft² ·hr ·°F (W/m² K)
R-7.5 (1.32)	R-21.7 (3.83)	R-16.6 (2.93)	0.060 (0.34)
R-15 (2.64)	R-29.2 (5.15)	R-24.0 (4.23)	0.042 (0.24)

Base Assembly – Curtain Wall Glazing

$U_{centre\ of\ glazing}$ Btu/ft² ·hr ·°F (W/m² K)	U_g Btu/ft² ·hr ·°F (W/m² K)
0.321 (1.82)	0.476 (2.7)

Curtain Wall Transition Linear Transmittance

Exterior Insulation 1D R-Value (RSI)	R ft²·hr·°F / Btu (m² K / W)	U Btu/ft² ·hr ·°F (W/m² K)	ψ Btu/ft hr °F (W/m K)
R-7.5 (1.32)	R-4.5 (0.79)	0.224 (1.27)	0.043 (0.074)
R-15 (2.64)	R-4.7 (0.83)	0.211 (1.20)	0.039 (0.067)

Temperature Indices

	R7.5	R15	
T_{i1}	0.40	0.57	Min T on sheathing, between studs
T_{i2}	0.66	0.77	Max T on sheathing, along studs
T_{i3}	0.55	0.56	Min T on frame, at edge of frame at glass

Detail 5.4.3

Exterior and Interior Insulated 3 5/8" x 1 5/8" Steel Stud (16" o.c.) Wall Assembly – Curtain Wall Transition

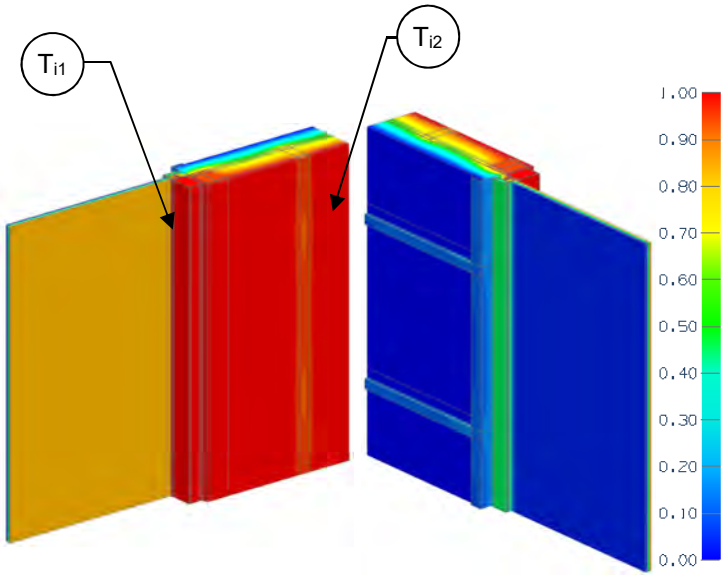

View from Interior[2] View from Exterior[2]

Thermal Performance Indicators

Assembly 1D (Nominal) R-Value	R_{1D}	R-13.9 (2.46 RSI) + exterior insulation
Transmittance / Resistance without Anomaly	U_g, U_w, R_w	"clear wall" U- and R-value for: g = curtain wall glazing w = steel stud assembly
Transmittance / Resistance	U, R	U and R-values for the assembly
Surface Temperature Index[1]	T_i	0 = exterior temperature 1 = interior temperature
Linear Transmittance	ψ	Incremental increase in transmittance per linear length of curtain wall transition

[1]Assumptions and limitations for surface temperatures identified in ASHRAE 1365-RP
[2]Thermal image shown is for the Aerogel detail

Nominal (1D) vs. Assembly Performance Indicators

Base Assembly – Wall

Exterior Insulation 1D R-Value (RSI)	R_{1D} ft²·hr·°F / Btu (m² K / W)	R_w ft²·hr·°F / Btu (m² K / W)	U_w Btu/ft² ·hr ·°F (W/m² K)
R-15 (2.64)	R-28.9 (5.09)	R-18.3 (3.23)	0.054 (0.31)

Base Assembly – Curtain Wall Glazing

$U_{centre\ of\ glass}$ Btu/ft² ·hr ·°F (W/m² K)	U_g Btu/ft² ·hr ·°F (W/m² K)
0.321 (1.82)	0.429 (2.44)

Curtain Wall Transition Linear Transmittance

Curtain Wall Transition	R ft²·hr·°F / Btu (m² K / W)	U Btu/ft² ·hr ·°F (W/m² K)	ψ Btu/ft hr °F (W/m K)
Conventional	R-3.8 (0.67)	0.262 (1.49)	0.069 (0.12)
Aerogel	R-3.8 (0.68)	0.260 (1.48)	0.019 (0.03)

Temperature Indices

	Conventional	Aerogel	
T_{i1}	0.32	0.33	Min T on glazing, along edge of glass
T_{i2}	0.77	0.77	Min T on sheathing, along Z-girts

Detail 5.4.4

Exterior and Interior Insulated 3 5/8″ x 1 5/8″ Steel Stud (16″ o.c) Wall Assembly with Horizontal Z-Girts (24″ o.c.) Supporting Metal Cladding – Conventional Curtain Wall Intersection

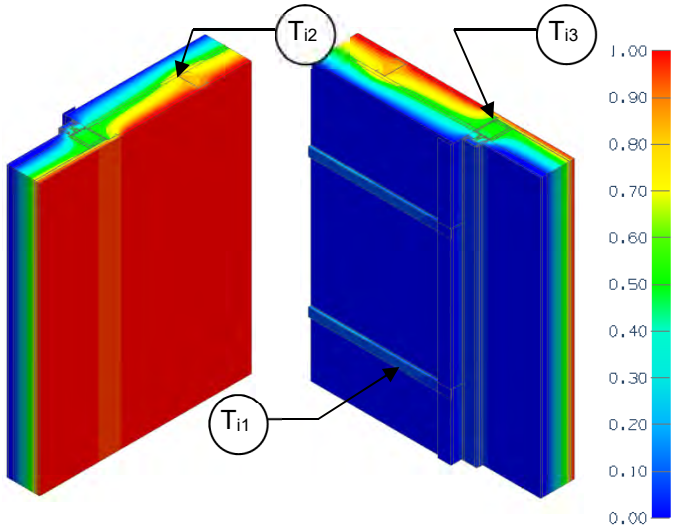

View from Interior View from Exterior

Thermal Performance Indicators

Assembly 1D (Nominal) R-Value	R_{1Dw}, R_{1Dcw}	Nominal thermal resistance of two base assemblies: w = wall cw = curtain wall
Transmittance / Resistance without Anomaly	U_{ow}, R_{ow}, U_{ocw}, R_{ocw}	"clear wall" U- and R-value for the two base assemblies
Transmittance / Resistance	U, R	U- and R-values for overall assembly
Surface Temperature Index[1]	T_i	0 = exterior temperature 1 = interior temperature
Linear Transmittance	ψ	Incremental increase in transmittance per linear length of transition joint

[1]Assumptions and limitations for surface temperatures identified in ASHRAE 1365-RP

Nominal (1D) vs. Assembly Performance Indicators

Base Assembly – Steel Stud Wall

Exterior Insulation 1D R-Value (RSI)	R_{1D} ft²·hr·°F / Btu (m² K / W)	R_{ow} ft²·hr·°F / Btu (m² K / W)	U_{ow} Btu/ft² ·hr ·°F (W/m² K)
R-5 (0.88)	R-19.2 (3.38)	R-13.4 (2.36)	0.075 (0.42)
R-15 (2.64)	R-29.2 (5.14)	R-18.5 (3.25)	0.054 (0.31)
R-25 (4.40)	R-39.2 (6.90)	R-22.1 (3.90)	0.045 (0.26)

Base Assembly – Curtain Wall Spandrel

R_{1Dcw}[2] ft²·hr·°F / Btu (m² K / W)	R_{ocw} ft²·hr·°F / Btu (m² K / W)	U_{ocw} Btu/ft² ·hr ·°F (W/m² K)
R-18.3 (3.22)	R-4.4 (0.78)	0.226 (1.29)

Transition Joint Linear Transmittance

Exterior Insulation 1D R-Value (RSI)	R ft²·hr·°F / Btu (m² K / W)	U Btu/ft² ·hr ·°F (W/m² K)	ψ Btu/ft hr °F (W/m K)
R-5 (0.88)	R-6.5 (1.14)	0.154 (0.88)	0.088 (0.151)
R-15 (2.64)	R-7.1 (1.25)	0.140 (0.80)	0.088 (0.151)
R-25 (4.40)	R-7.4 (1.30)	0.135 (0.77)	0.089 (0.155)

Temperature Indices

	R5	R15	R25	
T_{i1}	0.19	0.26	0.32	Min T on sheathing, along girt between studs, close to curtain wall
T_{i2}	0.66	0.78	0.82	Max T on sheathing, at studs, between z girts, away from curtain wall
T_{i3}	0.52	0.53	0.54	Min T on air cavity behind curtain wall, at mullion panel

Detail 5.4.5

Exterior Insulated Concrete Wall and Steel Stud Assembly Supporting Metal Cladding– Curtain Wall Transition Intersection

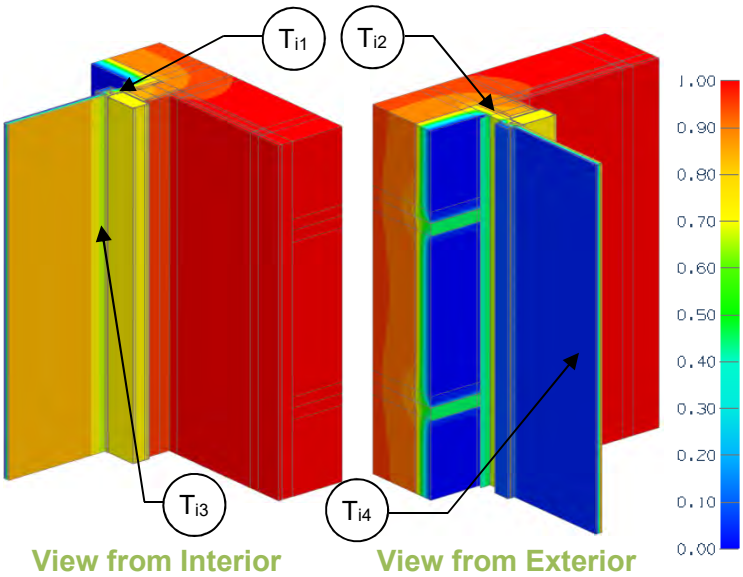

Thermal Performance Indicators

Assembly 1D (Nominal) R-Value	R_{1Dw}	R-1.9 (0.33 RSI) + exterior insulation
Transmittance / Resistance without Anomaly	U_g, U_w, R_w	"clear wall" U- and R-values for: g = curtain wall glazing w = concrete wall and steel stud assembly
Transmittance / Resistance	U, R	U- and R-values for overall assembly
Surface Temperature Index[1]	T_i	0 = exterior temperature 1 = interior temperature
Linear Transmittance	ψ	Incremental increase in transmittance per linear length of inside corner

[1]Assumptions and limitations for surface temperatures identified in ASHRAE 1365-RP

Nominal (1D) vs. Assembly Performance Indicators

Base Assembly – Exterior Insulated Concrete Wall

Wall Exterior Insulation 1D R-Value (RSI)	R_{1Dw} ft²·hr·°F / Btu (m² K / W)	R_w ft²·hr·°F / Btu (m² K / W)	U_w Btu/ft² ·hr ·°F (W/m² K)
R-15 (2.64)	R-16.9 (2.98)	R-9.5 (1.67)	0.105 (0.60)
R-20 (3.52)	R-21.9 (3.86)	R-10.9 (1.92)	0.092 (0.52)
R-25 (4.40)	R-26.9 (4.74)	R-12.0 (2.11)	0.083 (0.47)

Base Assembly – Curtain Wall Glazing

$U_{centre\ of\ glass}$ Btu/ft² ·hr ·°F (W/m² K)	U_g Btu/ft² ·hr ·°F (W/m² K)
0.305 (1.73)	0.441 (2.51)

Corner Linear Transmittance

Wall Exterior Insulation 1D R-Value (RSI)	R ft²·hr·°F / Btu (m² K / W)	U Btu/ft² ·hr ·°F (W/m² K)	ψ Btu/ft ·hr·°F (W/m K)
R-15 (2.64)	R-2.5 (0.44)	0.396 (2.25)	0.140 (0.242)
R-20 (3.52)	R-2.6 (0.45)	0.389 (2.21)	0.134 (0.232)
R-25 (4.40)	R-2.6 (0.46)	0.383 (2.18)	0.127 (0.220)

Temperature Indices

	R15	R20	R25	
T_{i1}	0.70	0.70	0.71	Min T on sheathing, along jamb
T_{i2}	0.83	0.85	0.86	Max T on sheathing, between studs
T_{i3}	0.65	0.65	0.65	Min T on jamb, along glazing
T_{i4}	0.65	0.65	0.65	Min T on glazing, centre of glazing

Detail 5.4.6

Exterior Insulated Concrete Wall and Steel Stud Assembly Supporting Metal Cladding with Cavity Insulation– Curtain Wall Transition Intersection

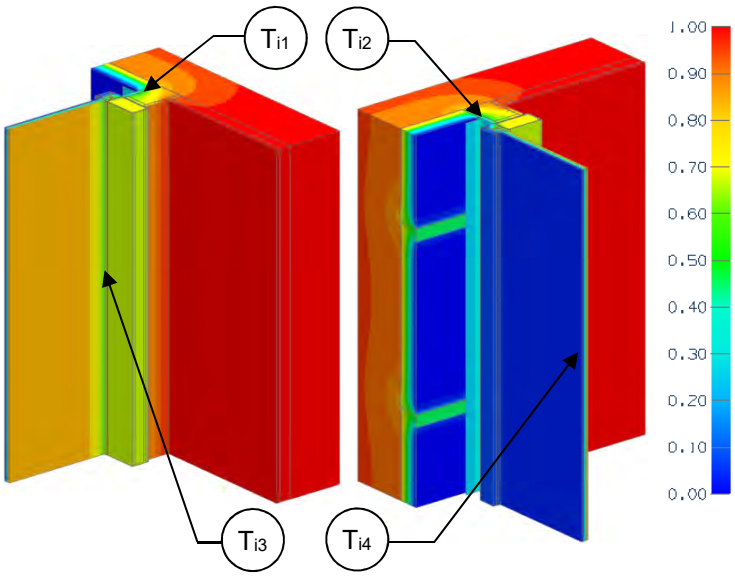

View from Interior **View from Exterior**

Thermal Performance Indicators

Assembly 1D (Nominal) R-Value	R_{1Dw}	R-1.9 (0.33 RSI) + exterior insulation
Transmittance / Resistance without Anomaly	U_g, U_w, R_w	"clear wall" U- and R-values for: g = curtain wall glazing w = concrete wall and steel stud assembly
Transmittance / Resistance	U, R	U- and R-values for overall assembly
Surface Temperature Index[1]	T_i	0 = exterior temperature 1 = interior temperature
Linear Transmittance	ψ	Incremental increase in transmittance per linear length of inside corner

[1]Assumptions and limitations for surface temperatures identified in ASHRAE 1365-RP

Nominal (1D) vs. Assembly Performance Indicators

Base Assembly – Exterior Insulated Concrete Wall

Wall Exterior Insulation 1D R-Value (RSI)	R_{1Dw} ft²·hr·°F / Btu (m² K / W)	R_w ft²·hr·°F / Btu (m² K / W)	U_w Btu/ft² ·hr ·°F (W/m² K)
R-15 (2.64)	R-16.9 (2.98)	R-9.5 (1.67)	0.105 (0.60)
R-20 (3.52)	R-21.9 (3.86)	R-10.9 (1.92)	0.092 (0.52)
R-25 (4.40)	R-26.9 (4.74)	R-12.0 (2.11)	0.083 (0.47)

Base Assembly – Curtain Wall Glazing

$U_{centre\ of\ glazing}$ Btu/ft² ·hr ·°F (W/m² K)	U_g Btu/ft² ·hr ·°F (W/m² K)
0.305 (1.73)	0.441 (2.51)

Corner Linear Transmittance

Wall Exterior Insulation 1D R-Value (RSI)	R ft²·hr·°F / Btu (m² K / W)	U Btu/ft² ·hr ·°F (W/m² K)	ψ Btu/ft ·hr·°F (W/m K)
R-15 (2.64)	R-2.3 (0.40)	0.438 (2.49)	0.234 (0.404)
R-20 (3.52)	R-2.4 (0.42)	0.421 (2.39)	0.204 (0.353)
R-25 (4.40)	R-2.5 (0.44)	0.403 (2.29)	0.171 (0.296)

Temperature Indices

	R15	R20	R25	
T_{i1}	0.49	0.53	0.59	Min T on sheathing, between studs
T_{i2}	0.74	0.77	0.81	Max T on sheathing, beside concrete wall
T_{i3}	0.62	0.63	0.63	Min T on jamb, along glazing
T_{i4}	0.62	0.63	0.63	Min T on centre of glazing

Detail 5.5.1

Exterior Insulated 3 5/8" x 1 5/8" Steel Stud (16" o.c.) Drained EIFS Wall Assembly – Concrete Parapet & Slab Intersection

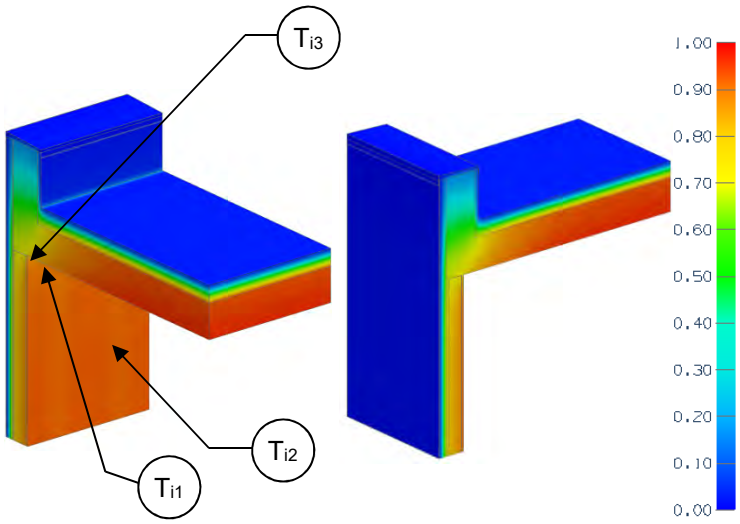

View from Interior View from Exterior

Thermal Performance Indicators

Assembly 1D (Nominal) R-Value	R_{1Dw}	R-2.7 (0.47 RSI) + exterior insulation
Transmittance / Resistance without Anomaly	U_r, R_r, U_w, R_w	"clear field" U- and R-values for: r = roof w = wall
Transmittance / Resistance	U, R	U- and R-values for overall assembly
Surface Temperature Index[1]	T_i	0 = exterior temperature 1 = interior temperature
Linear Transmittance	ψ	Incremental increase in transmittance per linear length of parapet

[1]Assumptions and limitations for surface temperatures identified in ASHRAE 1365-RP

Nominal (1D) vs. Assembly Performance Indicators

Base Assembly – Wall

Exterior Insulation 1D R-Value (RSI)	R_{1Dw} ft²·hr·°F / Btu (m² K / W)	R_w ft²·hr·°F / Btu (m² K / W)	U_w Btu/ft² ·hr ·°F (W/m² K)
R-7.5 (1.32)	R-10.2 (1.80)	R-10.0 (1.76)	0.100 (0.57)
R-11.3 (1.98)	R-13.9 (2.46)	R-13.7 (2.41)	0.073 (0.41)
R-15 (2.64)	R-17.7 (3.12)	R-17.4 (3.06)	0.057 (0.33)

Base Assembly - Roof

Roof Insulation 1DR-Value (RSI)	R_r ft² hr °F / Btu (m² K / W)	U_r Btu/ft² ·hr ·°F (W/m² K)
R-20 (3.52)	R-21.9 (3.86)	0.046 (0.26)

Parapet Linear Transmittance

Exterior Insulation 1D R-Value (RSI)	R ft²·hr·°F / Btu (m² K / W)	U Btu/ft² ·hr ·°F (W/m² K)	ψ Btu/ft hr °F (W/m K)
R-7.5 (1.32)	R-6.5 (1.14)	0.155 (0.88)	0.295 (0.511)
R-11.3 (1.98)	R-7.5 (1.31)	0.134 (0.76)	0.273 (0.472)
R-15 (2.64)	R-8.1 (1.43)	0.123 (0.70)	0.263 (0.456)

Temperature Indices

	R7.5	R11.3	R15	
T_{i1}	0.71	0.74	0.76	Min T on sheathing, at roof slab
T_{i2}	0.82	0.87	0.89	Max T on sheathing, along steel studs away from slab
T_{i3}	0.77	0.79	0.81	Min T on concrete ceiling, at drywall intersection, exposed to interior air

Detail 5.5.2

Exterior Insulated 3 5/8" x 1 5/8" Steel Stud (16" o.c.) Drained EIFS Wall Assembly – Insulated Concrete Parapet & Slab Intersection

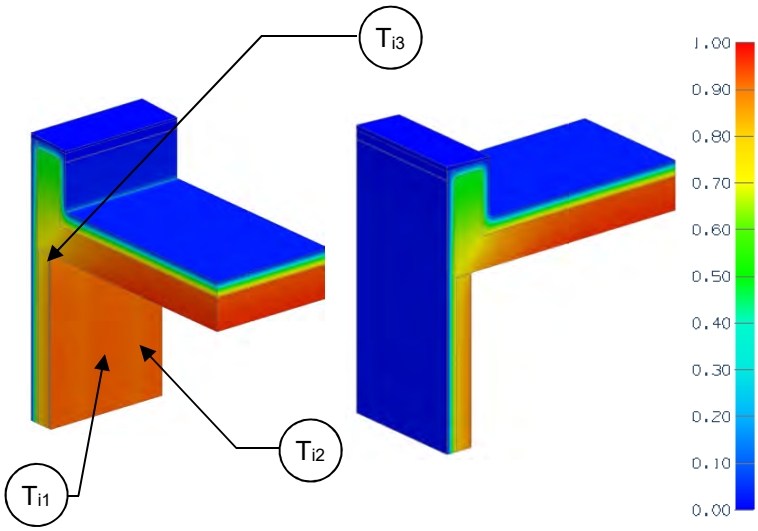

View from Interior View from Exterior

Thermal Performance Indicators

Assembly 1D (Nominal) R-Value	R_{1Dw}	R-2.7 (0.47 RSI) + exterior insulation
Transmittance / Resistance without Anomaly	U_r, R_r, U_w, R_w	"clear field" U- and R-values for: r = roof w = wall
Transmittance / Resistance	U, R	U- and R-values for overall assembly
Surface Temperature Index[1]	T_i	0 = exterior temperature 1 = interior temperature
Linear Transmittance	ψ	Incremental increase in transmittance per linear length of parapet

[1]Assumptions and limitations for surface temperatures identified in ASHRAE 1365-RP

Nominal (1D) vs. Assembly Performance Indicators

Base Assembly – Wall

Exterior Insulation 1D R-Value (RSI)	R_{1Dw} ft²·hr·°F / Btu (m² K / W)	R_w ft²·hr·°F / Btu (m² K / W)	U_w Btu/ft² ·hr ·°F (W/m² K)
R-7.5 (1.32)	R-10.2 (1.80)	R-10.0 (1.76)	0.100 (0.57)
R-11.3 (1.98)	R-13.9 (2.46)	R-13.7 (2.41)	0.073 (0.41)
R-15 (2.64)	R-17.7 (3.12)	R-17.4 (3.06)	0.057 (0.33)

Base Assembly - Roof

Roof Insulation 1D R-Value (RSI)	R_r ft² hr °F / Btu (m² K / W)	U_r Btu/ft² ·hr ·°F (W/m² K)
R-20 (3.52)	R-21.9 (3.86)	0.046 (0.26)

Parapet Linear Transmittance

Exterior Insulation 1D R-Value (RSI)	R ft²·hr·°F / Btu (m² K / W)	U Btu/ft² ·hr ·°F (W/m² K)	ψ Btu/ft hr °F (W/m K)
R-7.5 (1.32)	R-7.1 (1.24)	0.141 (0.80)	0.220 (0.380)
R-11.3 (1.98)	R-8.7 (1.53)	0.115 (0.66)	0.168 (0.291)
R-15 (2.64)	R-10.0 (1.76)	0.100 (0.57)	0.138 (0.238)

Temperature Indices

	R7.5	R11.3	R15	
T_{i1}	0.75	0.81	0.84	Min T on sheathing, along roof slab
T_{i2}	0.82	0.87	0.89	Max T on sheathing, along steel studs away from slab
T_{i3}	0.81	0.85	0.87	Min T on concrete ceiling, at drywall intersection, exposed to interior air

Detail 5.5.3

Exterior and Interior Insulated 3 5/8" x 1 5/8" Steel Stud (16" o.c.) Drained EIFS Wall Assembly – Concrete Parapet & Slab Intersection

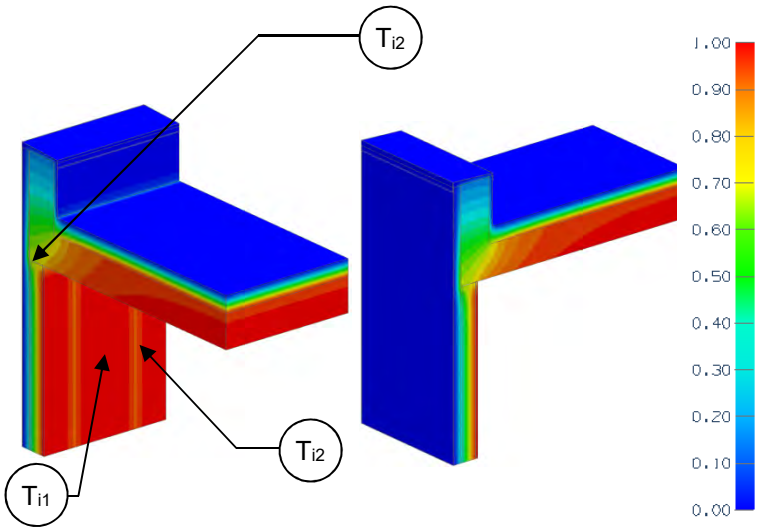

View from Interior View from Exterior

Thermal Performance Indicators

Assembly 1D (Nominal) R-Value	R_{1Dw}	R-14.2 (2.51 RSI) + exterior insulation
Transmittance / Resistance without Anomaly	U_r, R_r, U_w, R_w	"clear field" U- and R-values for: r = roof w = wall
Transmittance / Resistance	U, R	U- and R-values for overall assembly
Surface Temperature Index[1]	T_i	0 = exterior temperature 1 = interior temperature
Linear Transmittance	ψ	Incremental increase in transmittance per linear length of parapet

[1]Assumptions and limitations for surface temperatures identified in ASHRAE 1365-RP

Nominal (1D) vs. Assembly Performance Indicators

Base Assembly – Wall

Exterior Insulation 1D R-Value (RSI)	R_{1Dw} ft²·hr·°F / Btu (m² K / W)	R_w ft²·hr·°F / Btu (m² K / W)	U_w Btu/ft² ·hr ·°F (W/m² K)
R-7.5 (1.32)	R-21.7 (3.83)	R-16.6 (2.93)	0.060 (0.34)
R-15 (2.64)	R-29.2 (5.15)	R-24 (4.23)	0.042 (0.24)

Base Assembly - Roof

Roof Insulation 1D R-Value (RSI)	R_r ft² hr °F / Btu (m² K / W)	U_r Btu/ft² ·hr ·°F (W/m² K)
R-20 (3.52)	R-21.9 (3.86)	0.046 (0.26)

Parapet Linear Transmittance

Exterior Insulation 1D R-Value (RSI)	R ft²·hr·°F / Btu (m² K / W)	U Btu/ft² ·hr ·°F (W/m² K)	ψ Btu/ft hr °F (W/m K)
R-7.5 (1.32)	R-7.7 (1.35)	0.130 (0.74)	0.297 (0.514)
R-15 (2.64)	R-8.9 (1.57)	0.112 (0.64)	0.260 (0.451)

Temperature Indices

	R7.5	R15	
T_{i1}	0.41	0.58	Min T on sheathing, between studs
T_{i2}	0.68	0.77	Max T on sheathing, along steel studs
T_{i3}	0.75	0.78	Min T on concrete ceiling, at drywall intersection, exposed to interior air

Detail 5.5.4

Exterior and Interior Insulated 3 5/8" x 1 5/8" Steel Stud (16" o.c.) Drained EIFS Wall Assembly – Insulated Concrete Parapet & Slab Intersection

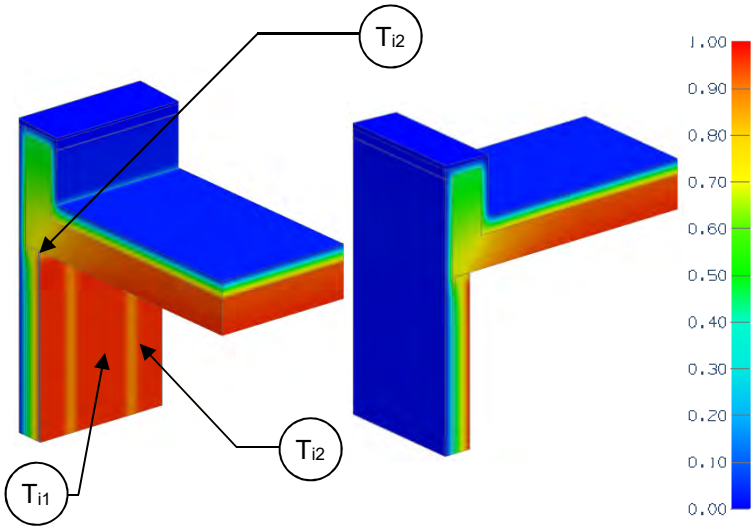

View from Interior View from Exterior

Thermal Performance Indicators

Assembly 1D (Nominal) R-Value	R_{1Dw}	R-14.2 (2.51 RSI) + exterior insulation
Transmittance / Resistance without Anomaly	U_{or}, R_{or}, U_{ow}, R_{ow}	"clear field" U- and R-values for: r = roof w = wall
Transmittance / Resistance	U, R	U- and R-values for overall assembly
Surface Temperature Index[1]	T_i	0 = exterior temperature 1 = interior temperature
Linear Transmittance	ψ	Incremental increase in transmittance per linear length of parapet

[1]Assumptions and limitations for surface temperatures identified in ASHRAE 1365-RP

Nominal (1D) vs. Assembly Performance Indicators

Base Assembly – Wall

Exterior Insulation 1D R-Value (RSI)	R_{1Dw} ft²·hr·°F / Btu (m² K / W)	R_w ft²·hr·°F / Btu (m² K / W)	U_w Btu/ft² ·hr ·°F (W/m² K)
R-7.5 (1.32)	R-21.7 (3.83)	R-16.6 (2.93)	0.060 (0.34)
R-15 (2.64)	R-29.2 (5.15)	R-24.0 (4.23)	0.042 (0.24)

Base Assembly - Roof

Roof Insulation 1D R-Value (RSI)	R_r ft² hr °F / Btu (m² K / W)	U_r Btu/ft² ·hr ·°F (W/m² K)
R-20 (3.52)	R-21.9 (3.86)	0.046 (0.26)

Parapet Linear Transmittance

Exterior Insulation 1D R-Value (RSI)	R ft²·hr·°F / Btu (m² K / W)	U Btu/ft² ·hr ·°F (W/m² K)	ψ Btu/ft hr °F (W/m K)
R-7.5 (1.32)	R-8.5 (1.50)	0.118 (0.67)	0.225 (0.390)
R-15 (2.64)	R-10.1 (1.78)	0.099 (0.56)	0.186 (0.323)

Temperature Indices

	R7.5	R15	
T_{i1}	0.41	0.51	Min T on sheathing, between studs
T_{i2}	0.72	0.78	Max T on sheathing, along steel studs
T_{i3}	0.75	0.84	Min T on concrete ceiling, at drywall intersection, exposed to interior air

Detail 5.5.5

Exterior Insulated 3 5/8″ x 1 5/8″ Steel Stud (16″ O.C.) Wall Assembly with Horizontal Z-Girts (24″ O.C.) Supporting Metal Cladding – Concrete Parapet & Slab Intersection

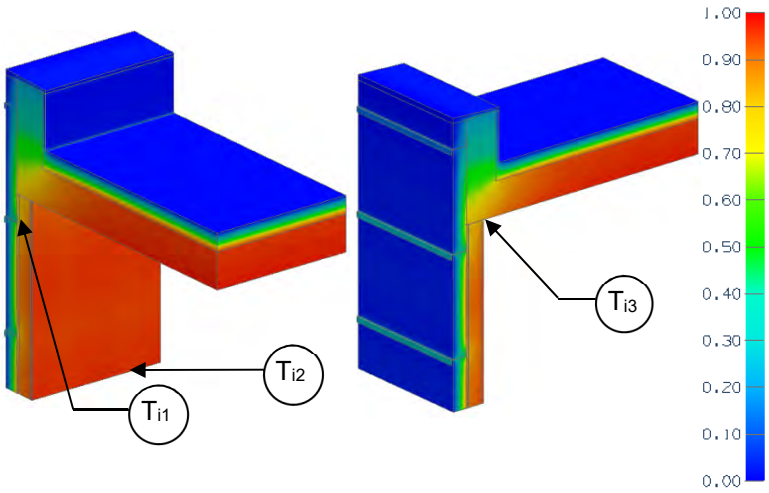

View from Interior View from Exterior

Thermal Performance Indicators

Assembly 1D (Nominal) R-Value	R_{1Dw}	R-3.2 (0.56 RSI) + exterior insulation
Transmittance / Resistance without Anomaly	U_r, R_r, U_w, R_w	"clear field" U- and R-values for two base assemblies: r = insulated roof w = steel stud wall assembly with horizontal z girts
Transmittance / Resistance	U, R	U- and R-values for overall assembly
Surface Temperature Index[1]	T_i	0 = exterior temperature 1 = interior temperature
Linear Transmittance	ψ	Incremental increase in transmittance per linear length of parapet

[1]Assumptions and limitations for surface temperatures identified in ASHRAE 1365-RP

Nominal (1D) vs. Assembly Performance Indicators

Base Assembly – Wall

Wall Exterior Insulation 1D R-Value (RSI)	R_{1Dw} ft²·hr·°F / Btu (m² K / W)	R_w ft²·hr·°F / Btu (m² K / W)	U_w Btu/ft² ·hr ·°F (W/m² K)
R-5 (0.88)	R-8.2 (1.44)	R-6.8 (1.21)	0.146 (0.83)
R-10 (1.76)	R-13.2 (2.32)	R-9.4 (1.66)	0.106 (0.60)
R-15 (2.64)	R-18.2 (3.20)	R-11.3 (1.99)	0.088 (0.50)
R-20 (3.52)	R-23.2 (4.08)	R-13.1 (2.31)	0.076 (0.43)
R-25 (4.40)	R-28.2 (4.96)	R-14.5 (2.56)	0.069 (0.39)

Base Assembly - Roof

Roof Insulation 1D R-Value (RSI)	R_r ft² hr °F / Btu (m² K / W)	U_r Btu/ft² ·hr ·°F (W/m² K)
R-20 (3.52)	R-21.9 (3.86)	0.046 (0.26)

Parapet Linear Transmittance

Wall Exterior Insulation 1D R-Value (RSI)	R ft²·hr·°F / Btu (m² K / W)	U Btu/ft² ·hr ·°F (W/m² K)	ψ Btu/ft hr °F (W/m K)
R-5 (0.88)	R-8.0 (1.40)	0.125 (0.71)	0.313 (0.541)
R-10 (1.76)	R-9.5 (1.67)	0.105 (0.60)	0.284 (0.491)
R-15 (2.64)	R-10.4 (1.83)	0.096 (0.55)	0.271 (0.468)
R-20 (3.52)	R-11.0 (1.94)	0.091 (0.52)	0.266 (0.460)
R-25 (4.40)	R-11.5 (2.02)	0.087 (0.49)	0.261 (0.452)

Temperature Indices

	R5	R10	R15	R20	R25	
T_{i1}	0.62	0.68	0.71	0.73	0.75	Min T on sheathing, along girt between studs, close to ceiling
T_{i2}	0.75	0.83	0.86	0.88	0.90	Max T on sheathing, at studs, away from ceiling
T_{i3}	0.74	0.77	0.79	0.80	0.80	Min T on ceiling, at gypsum and studs

Detail 5.5.6

Exterior and Interior Insulated 3 5/8" x 1 5/8" Steel Stud (16" o.c.) Wall Assembly with Horizontal Z-girts (24" o.c.) Supporting Metal Cladding – Concrete Parapet and Slab Intersection

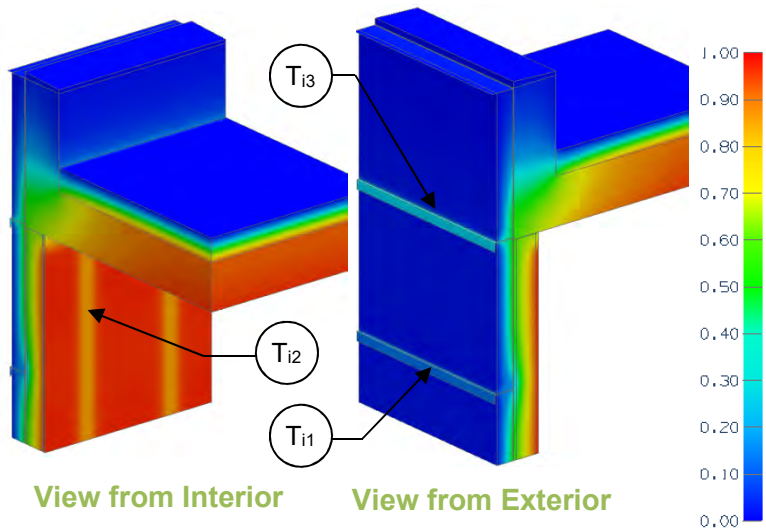

Thermal Performance Indicators

Assembly 1D (Nominal) R-Value	R_{1Dw}	R-14.2 (2.50 RSI) + exterior insulation
Transmittance / Resistance without Anomaly	U_r, R_r, U_w, R_w	"clear field" U- and R-values for: r = insulated roof w = steel stud wall assembly with horizontal z girts
Transmittance / Resistance	U, R	U- and R-values for overall assembly
Surface Temperature Index[1]	T_i	0 = exterior temperature 1 = interior temperature
Linear Transmittance	ψ	Incremental increase in transmittance per linear length of parapet

[1]Assumptions and limitations for surface temperatures identified in ASHRAE 1365-RP

Nominal (1D) vs. Assembly Performance Indicators

Base Assembly – External Insulated Steel Stud Wall

Exterior Insulation 1D R-Value (RSI)	R_{1Dw} ft²·hr·°F / Btu (m² K / W)	R_w ft²·hr·°F / Btu (m² K / W)	U_w Btu/ft² ·hr ·°F (W/m² K)
R-10 (1.76)	R-24.2 (4.26)	R-16.3 (2.87)	0.061 (0.35)
R-15 (2.64)	R-29.2 (5.14)	R-18.5 (3.25)	0.054 (0.31)

Base Assembly – Roof

Roof Insulation 1D R-Value (RSI)	R_r ft²·hr·°F / Btu (m² K / W)	U_r Btu/ft² ·hr ·°F (W/m² K)
R-20 (3.52)	R-21.9 (3.86)	0.046 (0.26)

Parapet Linear Transmittance

Exterior Insulation 1D R-Value (RSI)	R ft²·hr·°F / Btu (m² K / W)	U Btu/ft² ·hr ·°F (W/m² K)	ψ Btu/ft ·hr·°F (W/m K)
R-10 (1.76)	R-7.9 (1.39)	0.127 (0.72)	0.448 (0.776)
R-15 (2.64)	R-8.2 (1.44)	0.122 (0.70)	0.444 (0.768)

Temperature Indices

	R10	R15	
T_{i1}	0.30	0.34	Min T on sheathing, along girt between studs away from ceiling
T_{i2}	0.62	0.65	Max T on sheathing, at studs, between girts
T_{i3}	0.51	0.55	Min T on ceiling, at exterior gypsum between studs

Detail 5.5.7

Exterior and Interior Insulated 3 5/8" x 1 5/8" Steel Stud (16" o.c.) Wall Assembly with Vertical Z Girts (16" o.c.) Supporting Stucco Cladding –Concrete Parapet & Slab Intersection

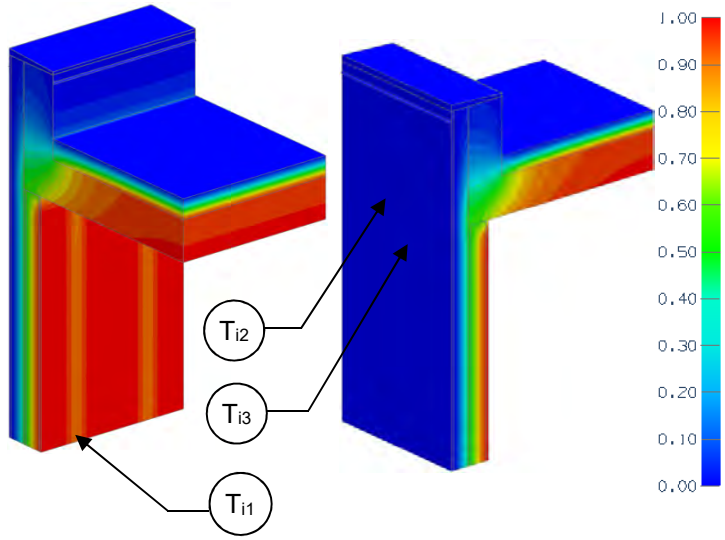

View from Interior View from Exterior

Thermal Performance Indicators

Assembly 1D (Nominal) R-Value	R_{1Dw}	R-14.5 (2.55 RSI) + exterior insulation
Transmittance / Resistance without Anomaly	U_r, R_r, U_w, R_w	"clear field" U- and R-values for two base assemblies: r = insulated roof w = steel stud wall assembly with horizontal z girts
Transmittance / Resistance	U, R	U- and R-values for overall assembly
Surface Temperature Index[1]	T_i	0 = exterior temperature 1 = interior temperature
Linear Transmittance	ψ	Incremental increase in transmittance per linear length of parapet

[1]Assumptions and limitations for surface temperatures identified in ASHRAE 1365-RP

Nominal (1D) vs. Assembly Performance Indicators

Base Assembly – Wall

Wall Exterior Insulation 1D R-Value (RSI)	R_{1Dw} ft²·hr·°F / Btu (m² K / W)	R_w ft²·hr·°F / Btu (m² K / W)	U_w Btu/ft² ·hr ·°F (W/m² K)
R-10 (1.76)	R-24.5 (4.31)	R-13.0 (2.29)	0.077 (0.44)
R-15 (2.64)	R-29.5 (5.20)	R-14.1 (2.49)	0.071 (0.40)

Base Assembly – Roof

Roof Insulation 1D R-Value (RSI)	R_r ft² hr °F / Btu (m² K / W)	U_r Btu/ft² ·hr ·°F (W/m² K)
R-20 (3.52)	R-21.9 (3.86)	0.046 (0.26)

Parapet Linear Transmittance

Wall Exterior Insulation 1D R-Value (RSI)	R ft²·hr·°F / Btu (m² K / W)	U Btu/ft² ·hr ·°F (W/m² K)	ψ Btu/ft ·hr·°F (W/m K)
R-10 (1.76)	R-7.8 (1.37)	0.129 (0.73)	0.454 (0.785)
R-15 (2.64)	R-8.1 (1.42)	0.124 (0.70)	0.445 (0.770)

Temperature Indices

	R10	R15	
T_{i1}	0.39	0.44	Min T on sheathing, along studs, away from ceiling
T_{i2}	0.55	0.56	Max T on sheathing, along track, behind braces
T_{i3}	0.64	0.65	Min T on ceiling, at gypsum and studs

Detail 5.5.8

Exterior and Interior Insulated 3 5/8" x 1 5/8" Steel Stud (16" o.c.) Wall Assembly with Intermittent Vertical Z Girts (16" o.c.) Supporting Metal Cladding –Concrete Roof Deck at Continuous Concrete Parapet

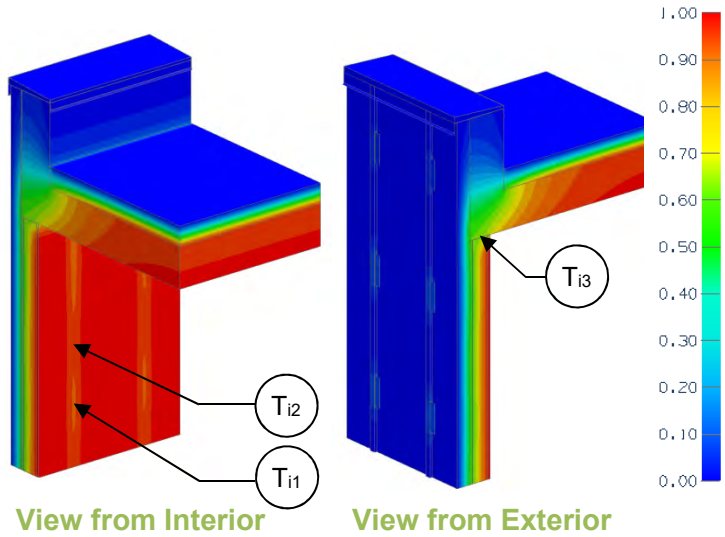

Thermal Performance Indicators

Assembly 1D (Nominal) R-Value	R_{1D}	R-14.4 (2.54 RSI) + exterior insulation
Transmittance / Resistance without Anomaly	U_r, R_r, U_w, R_w	"clear field" U- and R-values for two base assemblies: r = insulated roof w = steel stud wall assembly with horizontal z girts
Transmittance / Resistance	U, R	U and R-values for the overall assembly
Surface Temperature Index[1]	T_i	0 = exterior temperature 1 = interior temperature
Linear Transmittance	ψ	Incremental increase in transmittance per linear length of parapet

[1]Assumptions and limitations for surface temperatures identified in ASHRAE 1365-RP

Nominal (1D) vs. Assembly Performance Indicators

Base Assembly – Wall

Wall Exterior Insulation 1D R-Value (RSI)	R_{1D} ft²·hr·°F / Btu (m² K / W)	R_w ft²·hr·°F / Btu (m² K / W)	U_w Btu/ft² ·hr ·°F (W/m² K)
R-15 (2.64)	R-29.4 (5.18)	R-18.9 (3.33)	0.053 (0.30)

Base Assembly - Roof

Roof Exterior Insulation 1D R-Value (RSI)	R_w ft²·hr·°F / Btu (m² K / W)	U_w Btu/ft² ·hr ·°F (W/m² K)
R-20 (3.52)	R-21.9 (3.86)	0.046 (0.26)

Parapet Linear Transmittance

Wall Exterior Insulation 1D R-Value (RSI)	R ft²·hr·°F / Btu (m² K / W)	U Btu/ft² ·hr ·°F (W/m² K)	ψ Btu/ft hr °F (W/m K)
R-15 (2.64)	R-9.6 (1.69)	0.104 (0.59)	0.396 (0.686)

Temperature Indices

T_{i1}	0.52	Min T on sheathing away from roof slab, at clip
T_{i2}	0.72	Max T on sheathing away from roof slab, between clips at stud
T_{i3}	0.69	Min T on roof slab exposed to interior air, at gypsum between studs

Detail 5.5.9

Exterior and Interior Insulated 3 5/8" x 1 5/8" Steel Stud (16" o.c.) Wall Assembly with Intermittent Vertical Z Girts (16" o.c.) Supporting Metal Cladding –Concrete Roof Deck at Isokorb AXT1 Thermally Broken Concrete Parapet

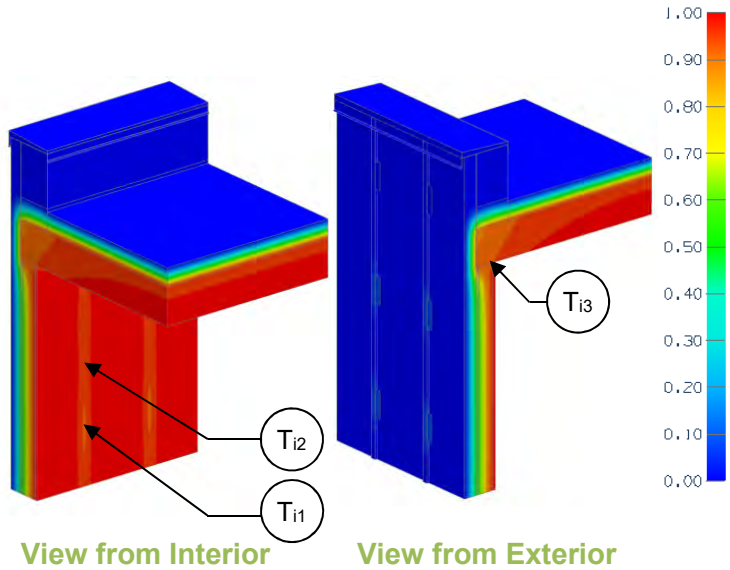

Thermal Performance Indicators

Assembly 1D (Nominal) R-Value	R_{1Dw}	R-14.3 (2.52 RSI) + exterior insulation
Transmittance / Resistance without Anomaly	U_r, R_r, U_w, R_w	"clear field" U- and R-values for: r = insulated roof w = steel stud wall assembly with horizontal z girts
Transmittance / Resistance	U, R	U and R-values for the overall assembly
Surface Temperature Index[1]	T_i	0 = exterior temperature 1 = interior temperature
Linear Transmittance	ψ	Incremental increase in transmittance per linear length of parapet

[1]Assumptions and limitations for surface temperatures identified in ASHRAE 1365-RP

Nominal (1D) vs. Assembly Performance Indicators

Base Assembly – Wall

Wall Exterior Insulation 1D R-Value (RSI)	R_{1Dw} ft²·hr·°F / Btu (m² K / W)	R_w ft²·hr·°F / Btu (m² K / W)	U_w Btu/ft² ·hr ·°F (W/m² K)
R-15 (2.64)	R-29.3 (5.16)	R-18.9 (3.33)	0.053 (0.30)

Base Assembly - Roof

Roof Exterior Insulation 1D R-Value (RSI)	R_r ft²·hr·°F / Btu (m² K / W)	U_r Btu/ft² ·hr ·°F (W/m² K)
R-20 (3.52)	R-21.9 (3.86)	0.046 (0.26)

Parapet Linear Transmittance

Wall Exterior Insulation 1D R-Value (RSI)	R ft²·hr·°F / Btu (m² K / W)	U Btu/ft² ·hr ·°F (W/m² K)	ψ Btu/ft hr °F (W/m K)
R-15 (2.64)	R-17.4 (3.06)	0.058 (0.33)	0.058 (0.100)

Temperature Indices

T_{i1}	0.52	Min T on sheathing away from roof slab, at clip
T_{i2}	0.72	Max T on sheathing away from roof slab, between clips at stud
T_{i3}	0.90	Min T on roof slab exposed to interior air, at gypsum between studs

Detail 5.5.10

Exterior and Interior Insulated 3 5/8″ x 1 5/8″ Steel Stud (16″ o.c) Wall Assembly with Horizontal Z-Girts (24″ o.c.) Supporting Metal Cladding – Steel Roof Deck with Open Web Steel Joist & Parapet Intersection

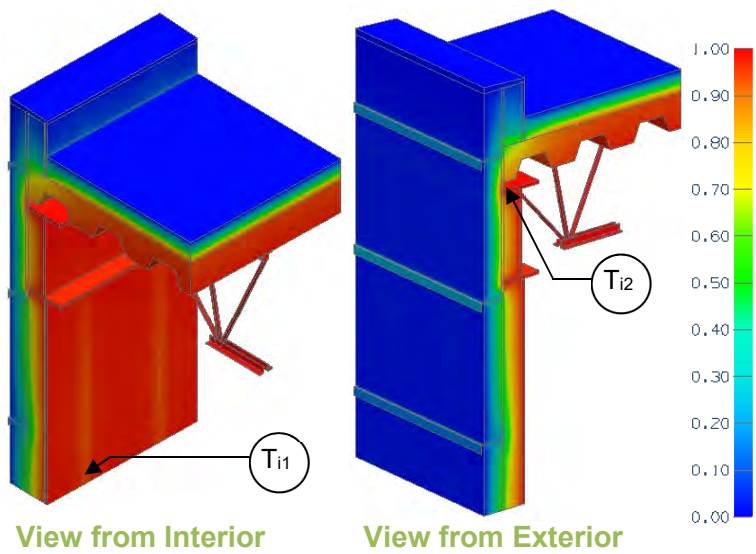

Thermal Performance Indicators

Assembly 1D (Nominal) R-Value	R_{1Dw}	R-14.2 (2.50 RSI) + exterior insulation
Transmittance / Resistance without Anomaly	U_r, R_r, U_w, R_w	"clear field" U- and R-values for: r = insulated roof w = steel stud wall assembly with horizontal z girts
Transmittance / Resistance	U, R	U and R-values for the overall assembly
Surface Temperature Index[1]	T_i	0 = exterior temperature 1 = interior temperature
Linear Transmittance	ψ	Incremental increase in transmittance per linear length of parapet

[1]Assumptions and limitations for surface temperatures identified in ASHRAE 1365-RP

Nominal (1D) vs. Assembly Performance Indicators

Base Assembly – Wall

Wall Exterior Insulation 1D R-Value (RSI)	R_{1D} ft²·hr·°F / Btu (m² K / W)	R_w ft²·hr·°F / Btu (m² K / W)	U_w Btu/ft² ·hr ·°F (W/m² K)
R-5 (0.88)	R-19.2 (3.38)	R-13.4 (2.36)	0.075 (0.42)
R-10 (1.76)	R-24.2 (4.26)	R-16.3 (2.87)	0.061 (0.35)
R-15 (2.64)	R-29.2 (5.14)	R-18.5 (3.25)	0.054 (0.31)
R-20 (3.52)	R-34.2 (6.02)	R-20.5 (3.61)	0.049 (0.28)
R-25 (4.40)	R-39.2 (6.90)	R-22.1 (3.90)	0.045 (0.26)

Base Assembly - Roof

Roof Exterior Insulation 1D R-Value (RSI)	R_r ft²·hr·°F / Btu (m² K / W)	U_r Btu/ft² ·hr ·°F (W/m² K)
R-20 (3.52)	R-21.9 (3.86)	0.046 (0.26)

Parapet Linear Transmittance

Wall Exterior Insulation 1D R-Value (RSI)	R ft²·hr·°F / Btu (m² K / W)	U Btu/ft² ·hr ·°F (W/m² K)	ψ Btu/ft hr °F (W/m K)
R-5 (0.88)	R-9.8 (1.73)	0.102 (0.58)	0.289 (0.500)
R-10 (1.76)	R-11.7 (2.05)	0.086 (0.49)	0.227 (0.393)
R-15 (2.64)	R-12.8 (2.26)	0.078 (0.44)	0.201 (0.348)
R-20 (3.52)	R-13.7 (2.41)	0.073 (0.41)	0.187 (0.324)
R-25 (4.40)	R-14.5 (2.54)	0.069 (0.39)	0.176 (0.304)

Temperature Indices

	R5	R10	R15	R20	R25	
T_{i1}	0.27	0.35	0.41	0.45	0.48	Min T on sheathing, along studs between girts
T_{i2}	0.80	0.84	0.96	0.96	0.97	Min T on interior surfaces, at sheathing, away from joist

Detail 5.5.11

Exterior and Interior Insulated 3 5/8″ x 1 5/8″ Steel Stud (16″ o.c) Wall Assembly with Horizontal Z-Girts (24″ o.c.) Supporting Metal Cladding – Steel Roof Deck with Open Web Steel Joist & Parapet Intersection with Thermal Break under Parapet Stud Cavity

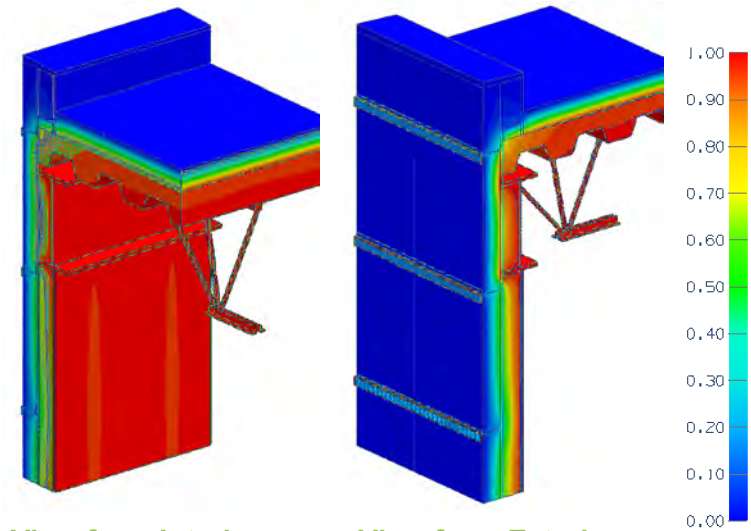

View from Interior View from Exterior

Thermal Performance Indicators

Assembly 1D (Nominal) R-Value	R_{1Dw}	R-14.2 (2.50 RSI) + exterior insulation
Transmittance / Resistance without Anomaly	U_r, R_r, U_w, R_w	“clear field” U- and R-values for: r = insulated roof w = steel stud wall assembly with horizontal z girts
Transmittance / Resistance	U, R	U and R-values for the overall assembly
Linear Transmittance	ψ	Incremental increase in transmittance per linear length of parapet

[1]Assumptions and limitations for surface temperatures identified in ASHRAE 1365-RP

Nominal (1D) vs. Assembly Performance Indicators

Base Assembly – Wall

Wall Exterior Insulation 1D R-Value (RSI)	R_{1D} ft²·hr·°F / Btu (m² K / W)	R_w ft²·hr·°F / Btu (m² K / W)	U_w Btu/ft² ·hr ·°F (W/m² K)
R-15 (2.64)	R-29.2 (5.14)	R-18.5 (3.25)	0.054 (0.31)

Base Assembly - Roof

Roof Exterior Insulation 1D R-Value (RSI)	R_r ft²·hr·°F / Btu (m² K / W)	U_r Btu/ft² ·hr ·°F (W/m² K)
R-20 (3.52)	R-21.9 (3.86)	0.046 (0.26)

Parapet Linear Transmittance

Wall Exterior Insulation 1D R-Value (RSI)	R ft²·hr·°F / Btu (m² K / W)	U Btu/ft² ·hr ·°F (W/m² K)	ψ Btu/ft hr °F (W/m K)
R-15 (2.64)	R-14.0 (2.47)	0.071 (0.39)	0.151 (0.260)

Detail 5.5.12

Owens Corning Exterior Insulated 6″ x 1 5/8” Steel Stud (16″ o.c.) Wall Assembly with Thermally Isolated Vertical Brackets and Rail System (24″ o.c.) Supporting Metal Cladding – Concrete Parapet and Roof Intersection

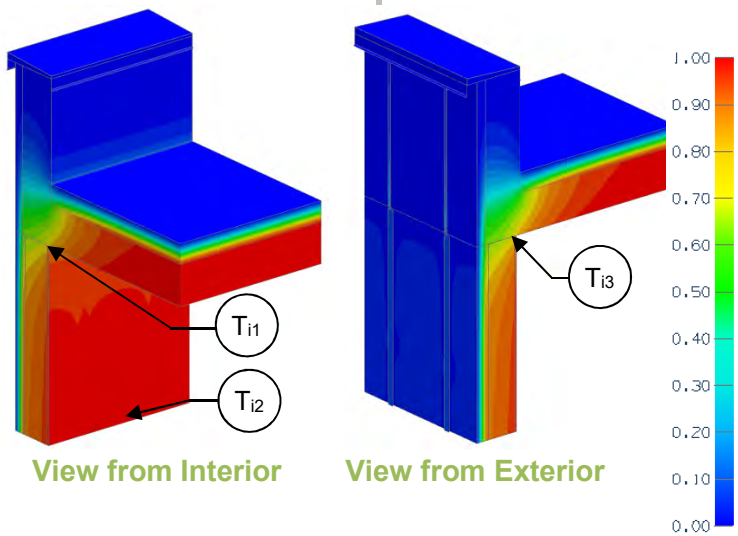

View from Interior View from Exterior

Thermal Performance Indicators

Assembly 1D (Nominal) R-Value	R_{1D}	R-3.3 (0.58 RSI) + exterior insulation
Transmittance / Resistance without Anomaly	U_r, R_r, U_w, R_w	“clear field” U- and R-values for: r = roof w = wall
Transmittance / Resistance	U, R	U- and R-values for overall assembly
Surface Temperature Index[1]	T_i	0 = exterior temperature 1 = interior temperature
Linear Transmittance	ψ	Incremental increase in transmittance per length of parapet

[1]Assumptions and limitations for surface temperatures identified in ASHRAE 1365-RP

Nominal (1D) vs. Assembly Performance Indicators

Base Assembly – Wall

Exterior Insulation 1D R-Value (RSI)	R_{1Dw} ft²·hr·ºF / Btu (m² K / W)	R_w ft²·hr·ºF / Btu (m² K / W)	U_w Btu/ft² ·hr ·ºF (W/m² K)
R-8.4 (1.48)	R-11.7 (2.06)	R-10.0 (1.77)	0.100 (0.57)
R-21.0 (3.70)	R-24.3 (4.28)	R-17.6 (3.10)	0.057 (0.32)

Base Assembly - Roof

Roof Insulation 1DR-Value (RSI)	R_r ft² hr ºF / Btu (m² K / W)	U_r Btu/ft² ·hr ·ºF (W/m² K)
R-20 (3.52)	R-21.9 (3.86)	0.046 (0.26)

Parapet Linear Transmittance

Exterior Insulation 1D R-Value (RSI)	R ft²·hr·ºF / Btu (m² K / W)	U Btu/ft² ·hr ·ºF (W/m² K)	ψ Btu/ft hr ºF (W/m K)
R-8.4 (1.48)	R-7.2 (1.28)	0.138 (0.78)	0.405 (0.701)
R-21.0 (3.70)	R-8.6 (1.51)	0.117 (0.66)	0.407 (0.704)

Temperature Indices

	R8.4	R21	
T_{i1}	0.58	0.62	Min T on sheathing at roof slab, at clip
T_{i2}	0.80	0.89	Max T on sheathing away from roof slab, between studs
T_{i3}	0.72	0.74	Min T on roof slab exposed to interior air, at gypsum between studs

Detail 5.5.13

Exterior and Interior Insulated 6″ x 1 5/8″ Steel Stud (16″ o.c.) Wall Assembly with Thermally Isolated Vertical Brackets and Rail System (24″ o.c.) Supporting Metal Cladding and Owens Corning R-20 Batt in Stud Cavity – Concrete Parapet and Roof Intersection

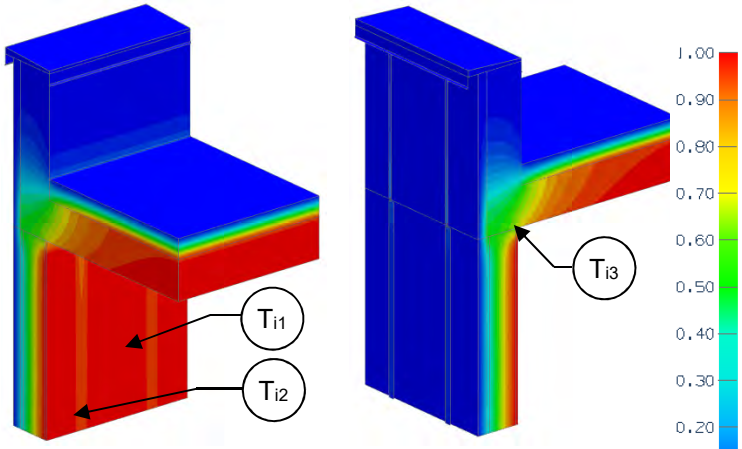

View from Interior View from Exterior

Thermal Performance Indicators

Assembly 1D (Nominal) R-Value	R_{1D}	R-22.4 (3.94 RSI) + exterior insulation
Transmittance / Resistance without Anomaly	U_r, R_r, U_w, R_w	"clear field" U- and R-values for: r = roof w = wall
Transmittance / Resistance	U, R	U- and R-values for overall assembly
Surface Temperature Index[1]	T_i	0 = exterior temperature 1 = interior temperature
Linear Transmittance	ψ	Incremental increase in transmittance per length of parapet

[1]Assumptions and limitations for surface temperatures identified in ASHRAE 1365-RP

Nominal (1D) vs. Assembly Performance Indicators

Base Assembly – Wall

Exterior Insulation 1D R-Value (RSI)	R_{1Dw} ft²·hr·°F / Btu (m² K / W)	R_w ft²·hr·°F / Btu (m² K / W)	U_w Btu/ft² ·hr ·°F (W/m² K)
R-8.4 (1.48)	R-30.8 (5.42)	R-18.3 (3.23)	0.055 (0.31)
R-21.0 (3.70)	R-43.4 (7.64)	R-25.8 (4.54)	0.039 (0.22)

Base Assembly - Roof

Roof Insulation 1DR-Value (RSI)	R_r ft² hr °F / Btu (m² K / W)	U_r Btu/ft² ·hr ·°F (W/m² K)
R-20 (3.52)	R-21.9 (3.86)	0.046 (0.26)

Parapet Linear Transmittance

Exterior Insulation 1D R-Value (RSI)	R ft²·hr·°F / Btu (m² K / W)	U Btu/ft² ·hr ·°F (W/m² K)	ψ Btu/ft hr °F (W/m K)
R-8.4 (1.48)	R-8.9 (1.57)	0.112 (0.64)	0.388 (0.671)
R-21.0 (3.70)	R-9.7 (1.71)	0.103 (0.59)	0.379 (0.657)

Temperature Indices

	R8.4	R21	
T_{i1}	0.35	0.54	Min T on sheathing at roof slab, away from roof slab, between studs at clip
T_{i2}	0.60	0.73	Max T on sheathing away from roof slab, at studs
T_{i3}	0.67	0.69	Min T on roof slab exposed to interior air, at gypsum between studs

Detail 5.5.14

Exterior and Interior Insulated 6″ x 1 5/8″ Steel Stud (16″ o.c.) Wall Assembly with Thermally Isolated Vertical Brackets and Rail System (24″ o.c.) Supporting Metal Cladding and Owens Corning R-22.5 Batt in Stud Cavity – Concrete Parapet and Roof Intersection

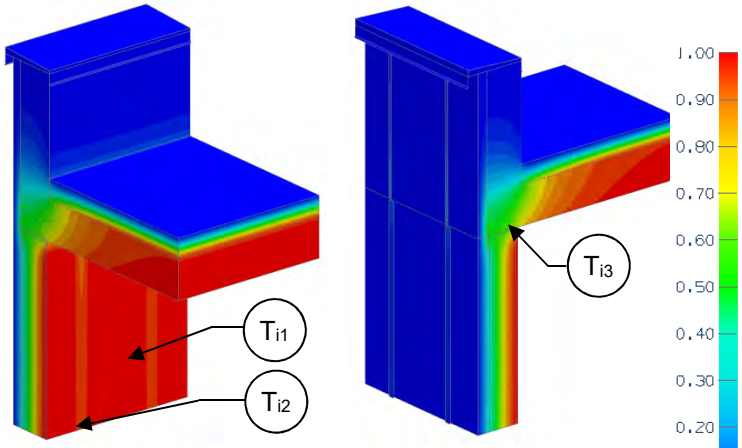

View from Interior View from Exterior

Thermal Performance Indicators

Assembly 1D (Nominal) R-Value	R_{1D}	R-24.9 (4.38 RSI) + exterior insulation
Transmittance / Resistance without Anomaly	U_r, R_r, U_w, R_w	"clear field" U- and R-values for: r = roof w = wall
Transmittance / Resistance	U, R	U- and R-values for overall assembly
Surface Temperature Index[1]	T_i	0 = exterior temperature 1 = interior temperature
Linear Transmittance	ψ	Incremental increase in transmittance per length of parapet

[1]Assumptions and limitations for surface temperatures identified in ASHRAE 1365-RP

Nominal (1D) vs. Assembly Performance Indicators

Base Assembly – Wall

Exterior Insulation 1D R-Value (RSI)	R_{1Dw} ft²·hr·°F / Btu (m² K / W)	R_w ft²·hr·°F / Btu (m² K / W)	U_w Btu/ft² ·hr ·°F (W/m² K)
R-8.4 (1.48)	R-33.3 (5.86)	R-19.0 (3.34)	0.053 (0.30)
R-21.0 (3.70)	R-45.9 (8.08)	R-26.4 (4.64)	0.038 (0.22)

Base Assembly - Roof

Roof Insulation 1DR-Value (RSI)	R_r ft² hr °F / Btu (m² K / W)	U_r Btu/ft² ·hr ·°F (W/m² K)
R-20 (3.52)	R-21.9 (3.86)	0.046 (0.26)

Parapet Linear Transmittance

Exterior Insulation 1D R-Value (RSI)	R ft²·hr·°F / Btu (m² K / W)	U Btu/ft² ·hr ·°F (W/m² K)	ψ Btu/ft hr °F (W/m K)
R-8.4 (1.48)	R-9.0 (1.58)	0.111 (0.63)	0.388 (0.671)
R-21.0 (3.70)	R-9.7 (1.72)	0.103 (0.58)	0.379 (0.656)

Temperature Indices

	R8.4	R21	
T_{i1}	0.33	0.52	Min T on sheathing at roof slab, away from roof slab, between studs at clip
T_{i2}	0.60	0.72	Max T on sheathing away from roof slab, at studs
T_{i3}	0.67	0.69	Min T on roof slab exposed to interior air, at gypsum between studs

Detail 5.5.15

Exterior and Interior Insulated 6″ x 1 5/8″ Steel Stud (16″ o.c.) Wall Assembly with Thermally Isolated Vertical Brackets and Rail System (24″ o.c.) Supporting Metal Cladding and Owens Corning R-24 Batt in Stud Cavity – Concrete Parapet and Roof Intersection

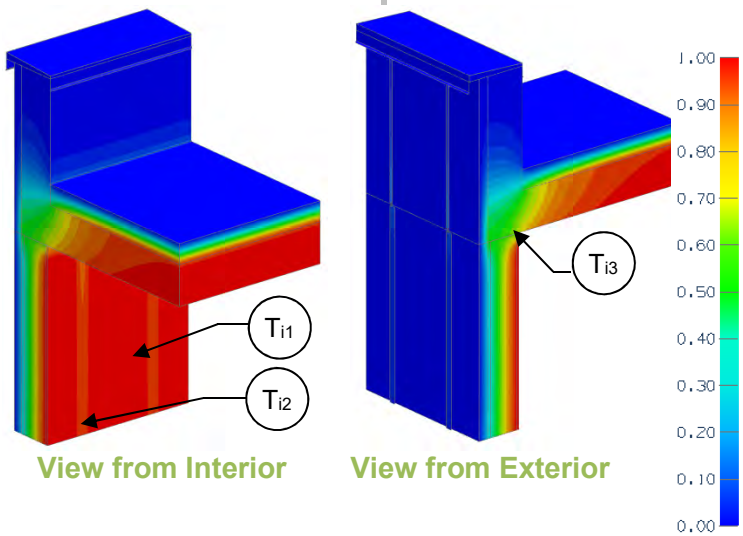

View from Interior View from Exterior

Thermal Performance Indicators

Assembly 1D (Nominal) R-Value	R_{1D}	R-26.4 (4.65 RSI) + exterior insulation
Transmittance / Resistance without Anomaly	U_r, R_r, U_w, R_w	"clear field" U- and R-values for: r = roof w = wall
Transmittance / Resistance	U, R	U- and R-values for overall assembly
Surface Temperature Index[1]	T_i	0 = exterior temperature 1 = interior temperature
Linear Transmittance	ψ	Incremental increase in transmittance per length of parapet

[1]Assumptions and limitations for surface temperatures identified in ASHRAE 1365-RP

Nominal (1D) vs. Assembly Performance Indicators

Base Assembly – Wall

Exterior Insulation 1D R-Value (RSI)	R_{1Dw} ft²·hr·°F / Btu (m² K / W)	R_w ft²·hr·°F / Btu (m² K / W)	U_w Btu/ft² ·hr ·°F (W/m² K)
R-8.4 (1.48)	R-34.8 (6.13)	R-19.3 (3.40)	0.052 (0.29)
R-21.0 (3.70)	R-47.4 (8.34)	R-26.7 (4.71)	0.037 (0.21)

Base Assembly - Roof

Roof Insulation 1DR-Value (RSI)	R_r ft² hr °F / Btu (m² K / W)	U_r Btu/ft² ·hr ·°F (W/m² K)
R-20 (3.52)	R-21.9 (3.86)	0.046 (0.26)

Parapet Linear Transmittance

Exterior Insulation 1D R-Value (RSI)	R ft²·hr·°F / Btu (m² K / W)	U Btu/ft² ·hr ·°F (W/m² K)	ψ Btu/ft hr °F (W/m K)
R-8.4 (1.48)	R-9.0 (1.59)	0.111 (0.63)	0.388 (0.672)
R-21.0 (3.70)	R-9.8 (1.72)	0.102 (0.58)	0.379 (0.657)

Temperature Indices

	R8.4	R21	
T_{i1}	0.32	0.50	Min T on sheathing at roof slab, away from roof slab, between studs at clip
T_{i2}	0.59	0.71	Max T on sheathing away from roof slab, at studs
T_{i3}	0.67	0.69	Min T on roof slab exposed to interior air, at gypsum between studs

Detail 5.5.16

Owens Corning Exterior Insulated 6″ x 1 5/8” Steel Stud (16″ o.c.) Wall Assembly with Thermally Isolated Vertical Brackets and Rail System (24″ o.c.) Supporting Metal Cladding – Concrete Roof Deck at Isokorb AXTI Thermal Broken Concrete Parapet

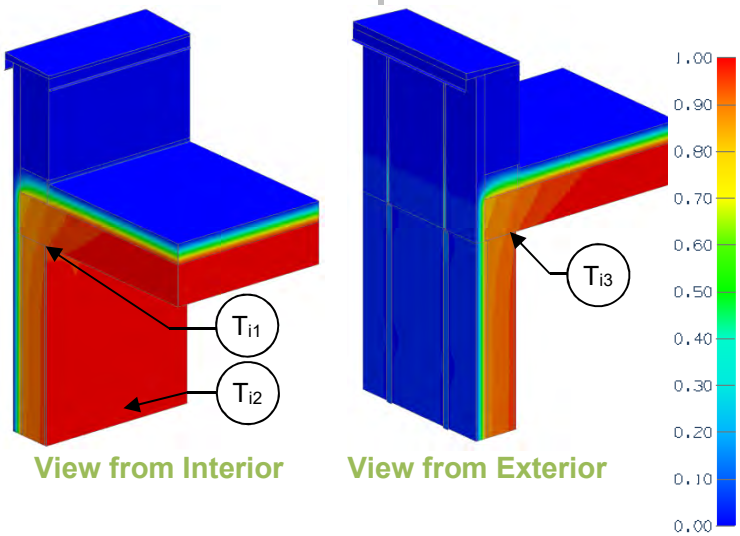

View from Interior View from Exterior

Thermal Performance Indicators

Assembly 1D (Nominal) R-Value	R_{1D}	R-3.3 (0.58 RSI) + exterior insulation
Transmittance / Resistance without Anomaly	U_r, R_r, U_w, R_w	“clear field” U- and R-values for: r = roof w = wall
Transmittance / Resistance	U, R	U- and R-values for overall assembly
Surface Temperature Index[1]	T_i	0 = exterior temperature 1 = interior temperature
Linear Transmittance	ψ	Incremental increase in transmittance per length of parapet

[1]Assumptions and limitations for surface temperatures identified in ASHRAE 1365-RP

Nominal (1D) vs. Assembly Performance Indicators

Base Assembly – Wall

Exterior Insulation 1D R-Value (RSI)	R_{1Dw} ft²·hr·ºF / Btu (m² K / W)	R_w ft²·hr·ºF / Btu (m² K / W)	U_w Btu/ft² ·hr ·ºF (W/m² K)
R-8.4 (1.48)	R-11.7 (2.06)	R-10.0 (1.77)	0.100 (0.57)
R-21.0 (3.70)	R-24.3 (4.28)	R-17.6 (3.10)	0.057 (0.32)

Base Assembly - Roof

Roof Insulation 1DR-Value (RSI)	R_r ft² hr ºF / Btu (m² K / W)	U_r Btu/ft² ·hr ·ºF (W/m² K)
R-20 (3.52)	R-21.9 (3.86)	0.046 (0.26)

Parapet Linear Transmittance

Exterior Insulation 1D R-Value (RSI)	R ft²·hr·ºF / Btu (m² K / W)	U Btu/ft² ·hr ·ºF (W/m² K)	ψ Btu/ft hr ºF (W/m K)
R-8.4 (1.48)	R-10.6 (1.87)	0.094 (0.53)	0.130 (0.225)
R-21.0 (3.70)	R-14.4 (2.54)	0.069 (0.39)	0.112 (0.194)

Temperature Indices

	R8.4	R21	
T_{i1}	0.71	0.76	Min T on sheathing at roof slab, at clip
T_{i2}	0.81	0.90	Max T on sheathing away from roof slab, between studs
T_{i3}	0.86	0.89	Min T on roof slab exposed to interior air, at gypsum between studs

Detail 5.5.17

Exterior and Interior Insulated 6″ x 1 5/8″ Steel Stud (16″ o.c.) Wall Assembly with Thermally Isolated Vertical Brackets and Rail System (24″ o.c.) Supporting Metal Cladding and Owens Corning R-20 Batt in Stud Cavity – Concrete Roof Deck at Isokorb AXTI Thermal Broken Concrete Parapet

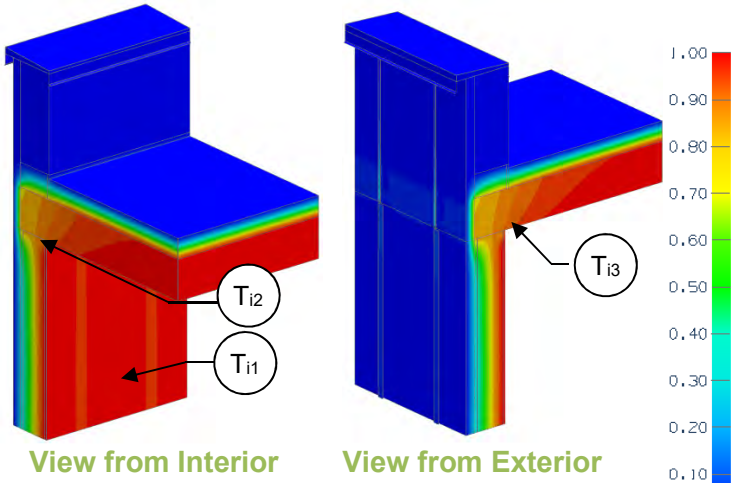

Thermal Performance Indicators

Assembly 1D (Nominal) R-Value	R_{1D}	R-22.4 (3.94 RSI) + exterior insulation
Transmittance / Resistance without Anomaly	U_r, R_r, U_w, R_w	"clear field" U- and R-values for: r = roof w = wall
Transmittance / Resistance	U, R	U- and R-values for overall assembly
Surface Temperature Index[1]	T_i	0 = exterior temperature 1 = interior temperature
Linear Transmittance	ψ	Incremental increase in transmittance per length of parapet

[1]Assumptions and limitations for surface temperatures identified in ASHRAE 1365-RP

Nominal (1D) vs. Assembly Performance Indicators

Base Assembly – Wall

Exterior Insulation 1D R-Value (RSI)	R_{1Dw} ft²·hr·°F / Btu (m² K / W)	R_w ft²·hr·°F / Btu (m² K / W)	U_w Btu/ft² ·hr ·°F (W/m² K)
R-8.4 (1.48)	R-30.8 (5.42)	R-18.3 (3.23)	0.055 (0.31)
R-21.0 (3.70)	R-43.4 (7.64)	R-25.8 (4.54)	0.039 (0.22)

Base Assembly - Roof

Roof Insulation 1DR-Value (RSI)	R_r ft² hr °F / Btu (m² K / W)	U_r Btu/ft² ·hr ·°F (W/m² K)
R-20 (3.52)	R-21.9 (3.86)	0.046 (0.26)

Parapet Linear Transmittance

Exterior Insulation 1D R-Value (RSI)	R ft²·hr·°F / Btu (m² K / W)	U Btu/ft² ·hr ·°F (W/m² K)	ψ Btu/ft hr °F (W/m K)
R-8.4 (1.48)	R-13.8 (2.43)	0.073 (0.41)	0.139 (0.241)
R-21.0 (3.70)	R-16.6 (2.92)	0.060 (0.34)	0.113 (0.196)

Temperature Indices

	R8.4	R21	
T_{i1}	0.35	0.53	Min T on sheathing away from roof slab, between studs at clip
T_{i2}	0.72	0.78	Max T on sheathing at roof slab, between studs
T_{i3}	0.84	0.87	Min T on roof slab exposed to interior air, at gypsum between studs

Detail 5.5.18

Exterior and Interior Insulated 6″ x 1 5/8″ Steel Stud (16″ o.c.) Wall Assembly with Thermally Isolated Vertical Brackets and Rail System (24″ o.c.) Supporting Metal Cladding and Owens Corning R-22.5 Batt in Stud Cavity – Concrete Roof Deck at Isokorb AXTI Thermal Broken Concrete Parapet

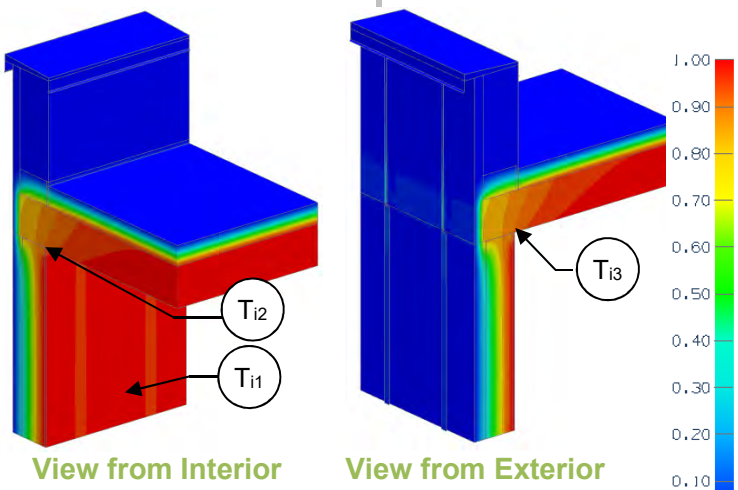

Thermal Performance Indicators

Assembly 1D (Nominal) R-Value	R_{1D}	R-24.9 (4.38 RSI) + exterior insulation
Transmittance / Resistance without Anomaly	U_r, R_r, U_w, R_w	"clear field" U- and R-values for: r = roof w = wall
Transmittance / Resistance	U, R	U- and R-values for overall assembly
Surface Temperature Index[1]	T_i	0 = exterior temperature 1 = interior temperature
Linear Transmittance	ψ	Incremental increase in transmittance per length of parapet

[1]Assumptions and limitations for surface temperatures identified in ASHRAE 1365-RP

Nominal (1D) vs. Assembly Performance Indicators

Base Assembly – Wall

Exterior Insulation 1D R-Value (RSI)	R_{1Dw} ft²·hr·°F / Btu (m² K / W)	R_w ft²·hr·°F / Btu (m² K / W)	U_w Btu/ft² ·hr ·°F (W/m² K)
R-8.4 (1.48)	R-33.3 (5.86)	R-19.0 (3.34)	0.053 (0.30)
R-21.0 (3.70)	R-45.9 (8.08)	R-26.4 (4.64)	0.038 (0.22)

Base Assembly - Roof

Roof Insulation 1DR-Value (RSI)	R_r ft² hr °F / Btu (m² K / W)	U_r Btu/ft² ·hr ·°F (W/m² K)
R-20 (3.52)	R-21.9 (3.86)	0.046 (0.26)

Parapet Linear Transmittance

Exterior Insulation 1D R-Value (RSI)	R ft²·hr·°F / Btu (m² K / W)	U Btu/ft² ·hr ·°F (W/m² K)	ψ Btu/ft hr °F (W/m K)
R-8.4 (1.48)	R-13.9 (2.46)	0.072 (0.41)	0.140 (0.242)
R-21.0 (3.70)	R-16.7 (2.94)	0.060 (0.34)	0.113 (0.196)

Temperature Indices

	R8.4	R21	
T_{i1}	0.33	0.51	Min T on sheathing away from roof slab, between studs at clip
T_{i2}	0.72	0.78	Max T on sheathing at roof slab, between studs
T_{i3}	0.84	0.87	Min T on roof slab exposed to interior air, at gypsum between studs

Detail 5.5.19

Exterior and Interior Insulated 6″ x 1 5/8″ Steel Stud (16″ o.c.) Wall Assembly with Thermally Isolated Vertical Brackets and Rail System (24″ o.c.) Supporting Metal Cladding and Owens Corning R-24 Batt in Stud Cavity – Concrete Roof Deck at Isokorb AXTI Thermal Broken Concrete Parapet

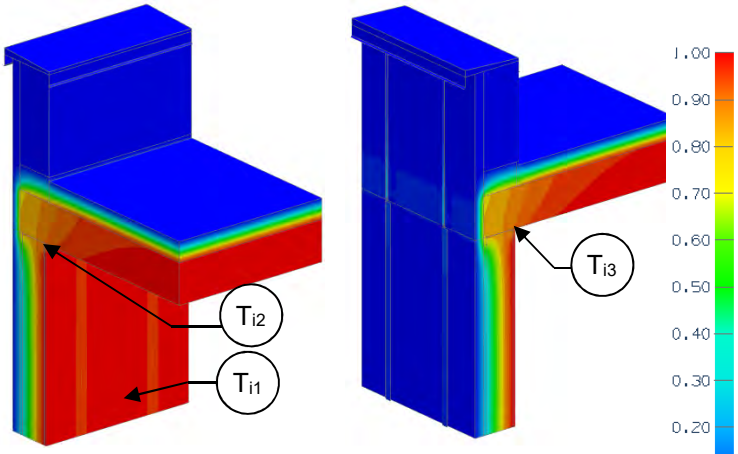

View from Interior View from Exterior

Thermal Performance Indicators

Assembly 1D (Nominal) R-Value	R_{1D}	R-26.4 (4.65 RSI) + exterior insulation
Transmittance / Resistance without Anomaly	U_r, R_r, U_w, R_w	"clear field" U- and R-values for: r = roof w = wall
Transmittance / Resistance	U, R	U- and R-values for overall assembly
Surface Temperature Index[1]	T_i	0 = exterior temperature 1 = interior temperature
Linear Transmittance	ψ	Incremental increase in transmittance per length of parapet

[1]Assumptions and limitations for surface temperatures identified in ASHRAE 1365-RP

Nominal (1D) vs. Assembly Performance Indicators

Base Assembly – Wall

Exterior Insulation 1D R-Value (RSI)	R_{1Dw} ft²·hr·°F / Btu (m² K / W)	R_w ft²·hr·°F / Btu (m² K / W)	U_w Btu/ft² ·hr ·°F (W/m² K)
R-8.4 (1.48)	R-34.8 (6.13)	R-19.3 (3.40)	0.052 (0.29)
R-21.0 (3.70)	R-47.4 (8.34)	R-26.7 (4.71)	0.037 (0.21)

Base Assembly - Roof

Roof Insulation 1DR-Value (RSI)	R_r ft² hr °F / Btu (m² K / W)	U_r Btu/ft² ·hr ·°F (W/m² K)
R-20 (3.52)	R-21.9 (3.86)	0.046 (0.26)

Parapet Linear Transmittance

Exterior Insulation 1D R-Value (RSI)	R ft²·hr·°F / Btu (m² K / W)	U Btu/ft² ·hr ·°F (W/m² K)	ψ Btu/ft hr °F (W/m K)
R-8.4 (1.48)	R-14.0 (2.47)	0.071 (0.41)	0.141 (0.244)
R-21.0 (3.70)	R-16.7 (2.94)	0.060 (0.34)	0.115 (0.199)

Temperature Indices

	R8.4	R21	
T_{i1}	0.32	0.51	Min T on sheathing away from roof slab, between studs at clip
T_{i2}	0.72	0.78	Max T on sheathing at roof slab, between studs
T_{i3}	0.84	0.87	Min T on roof slab exposed to interior air, at gypsum between studs

Detail 5.5.20

Exterior Insulated 6″ x 1 5/8″ Steel Stud (16″ o.c.) Wall Assembly with Thermally Isolated Vertical Brackets and Rail System Supporting Metal Cladding – Concrete Roof Deck at Isokorb AXT Thermally Broken Concrete Parapet

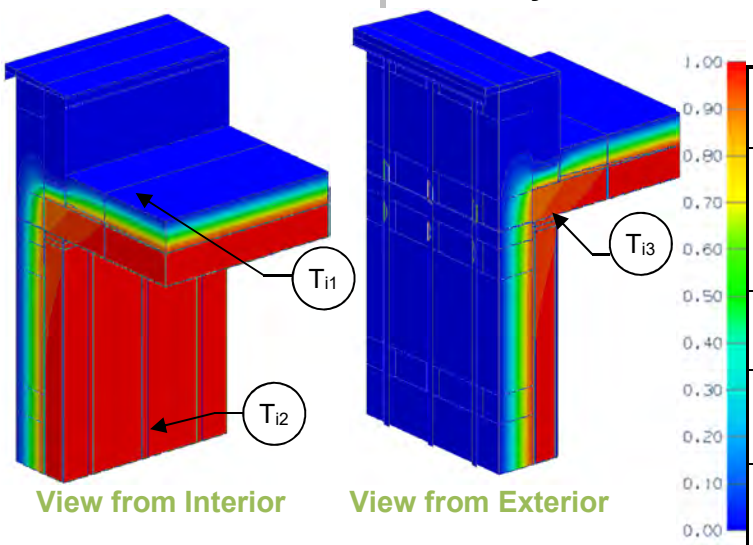

View from Interior View from Exterior

Thermal Performance Indicators

Assembly 1D (Nominal) R-Value	R_{1D}	R-3.2 (0.56 RSI) + exterior insulation
Transmittance / Resistance without Anomaly	U_r, R_r, U_w, R_w	"clear field" U- and R-values for: r = roof w = wall
Transmittance / Resistance	U, R	U- and R-values for overall assembly
Surface Temperature Index[1]	T_i	0 = exterior temperature 1 = interior temperature
Linear Transmittance	ψ	Incremental increase in transmittance per linear length of parapet

[1]Assumptions and limitations for surface temperatures identified in ASHRAE 1365-RP

Scenario

Scenario	
A	Sloped Roof
B	Concrete Topping
C	Concrete Topping with Aligned Insulation

Nominal (1D) vs. Assembly Performance Indicators

Base Assembly – Wall

Exterior Insulation 1D R-Value (RSI)	R_{1Dw} ft²·hr·°F / Btu (m² K / W)	R_w ft²·hr·°F / Btu (m² K / W)	U_w Btu/ft² ·hr ·°F (W/m² K)
R-42.0 (7.40)	R-45.2 (7.96)	R-40.0 (7.04)	0.025 (0.14)

Base Assembly - Roof

Roof Insulation 1D R-Value (RSI)	R_r ft² hr °F / Btu (m² K / W)	U_r Btu/ft² ·hr ·°F (W/m² K)
R-40 (7.01)	R-41.9 (7.39)	0.024 (0.14)

Parapet Linear Transmittance

Scenario	Exterior Insulation 1D R-Value (RSI)	R ft²·hr·°F / Btu (m² K / W)	U Btu/ft² ·hr ·°F (W/m² K)	ψ Btu/ft hr °F (W/m K)
A	R-42.0 (7.40)	R-22.3 (3.94)	0.045 (0.25)	0.099 (0.171)
B	R-42.0 (7.40)	R-24.6 (4.33)	0.041 (0.23)	0.078 (0.136)
C	R-42.0 (7.40)	R-26.5 (4.67)	0.038 (0.21)	0.063 (0.110)

Temperature Indices

	A	B	C	
T_{i1}	0.88	0.91	0.92	Min T on sheathing at roof slab, aligned with Isokorb AXT Thermal Break
T_{i2}	0.95	0.95	0.95	Max T on sheathing away from roof slab, beside studs
T_{i3}	0.91	0.94	0.94	Min T on roof slab exposed to interior air, at gypsum, aligned with Isokorb AXT Thermal Break

Detail 5.5.21

Exterior and Interior Insulated 6″ x 1 5/8″ Steel Stud (16″ o.c.) Wall Assembly with Thermally Isolated Vertical Brackets and Rail System Supporting Metal Cladding and R-19 Batt in Stud Cavity – Concrete Roof Deck at Isokorb AXT Thermally Broken Concrete Parapet

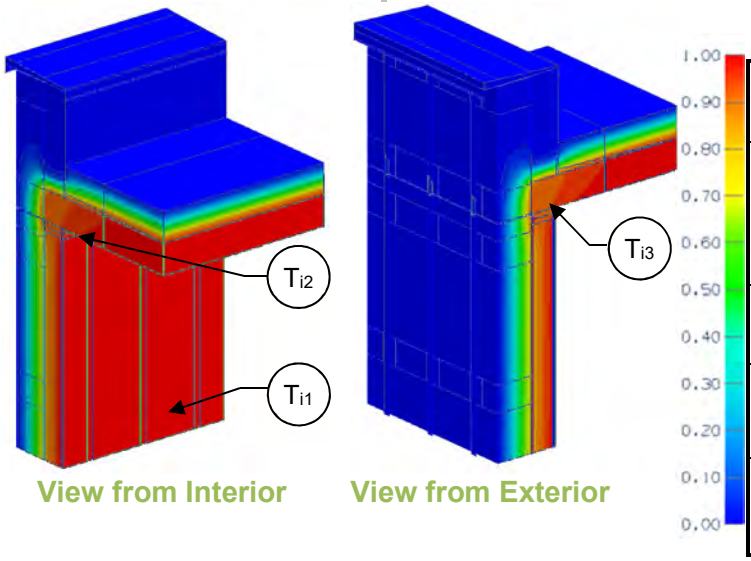

Thermal Performance Indicators

Assembly 1D (Nominal) R-Value	R_{1D}	R-21.3 (3.75 RSI) + exterior insulation
Transmittance / Resistance without Anomaly	U_r, R_r, U_w, R_w	"clear field" U- and R-values for: r = roof w = wall
Transmittance / Resistance	U, R	U- and R-values for overall assembly
Surface Temperature Index[1]	T_i	0 = exterior temperature 1 = interior temperature
Linear Transmittance	ψ	Incremental increase in transmittance per linear length of parapet

[1]Assumptions and limitations for surface temperatures identified in ASHRAE 1365-RP

Scenario

Scenario	
A	Slopped Roof
B	Concrete Topping
C	Concrete Topping with Aligned Insulation

Nominal (1D) vs. Assembly Performance Indicators

Base Assembly – Wall

Exterior Insulation 1D R-Value (RSI)	R_{1Dw} ft²·hr·°F / Btu (m² K / W)	R_w ft²·hr·°F / Btu (m² K / W)	U_w Btu/ft² ·hr ·°F (W/m² K)
R-42.0 (7.40)	R-63.3 (11.15)	R-48.3 (8.51)	0.021 (0.12)

Base Assembly - Roof

Roof Insulation 1D R-Value (RSI)	R_r ft² hr °F / Btu (m² K / W)	U_r Btu/ft² ·hr ·°F (W/m² K)
R-40 (7.01)	R-41.9 (7.39)	0.024 (0.14)

Parapet Linear Transmittance

Scenario	Exterior Insulation 1D R-Value (RSI)	R ft²·hr·°F / Btu (m² K / W)	U Btu/ft² ·hr ·°F (W/m² K)	ψ Btu/ft hr °F (W/m K)
A	R-42.0 (7.40)	R-23.3 (4.11)	0.043 (0.24)	0.099 (0.171)
B	R-42.0 (7.40)	R-25.7 (4.52)	0.039 (0.22)	0.079 (0.137)
C	R-42.0 (7.40)	R-27.7 (4.89)	0.036 (0.21)	0.064 (0.111)

Temperature Indices

	A	B	C	
T_{i1}	0.77	0.77	0.77	Min T on sheathing away from roof slab, between studs
T_{i2}	0.88	0.89	0.90	Max T on sheathing at roof slab, at studs, not aligned with Isokorb AXT Thermal Break
T_{i3}	0.90	0.92	0.93	Min T on roof slab exposed to interior air, at gypsum, aligned with Isokorb AXT Thermal Break

Detail 5.6.1

Exterior Insulated 3 5/8" x 1 5/8" Steel Stud (16" o.c.) Drained EIFS Wall Assembly – Corner Intersection

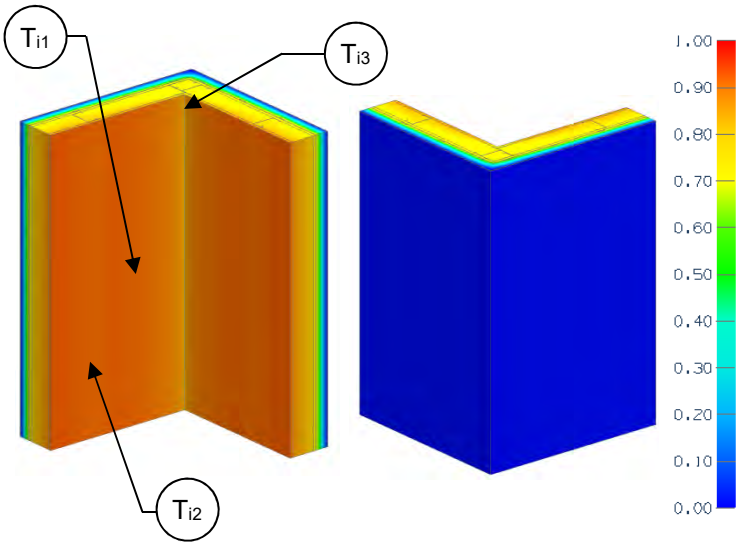

View from Interior **View from Exterior**

Thermal Performance Indicators

Assembly 1D (Nominal) R-Value	R_{1D}	R-2.7 (0.47 RSI) + exterior insulation
Transmittance / Resistance without Anomaly	U_o, R_o	"clear wall" U- and R-value, without corner
Transmittance / Resistance	U, R	U and R-values for the overall assembly
Surface Temperature Index[1]	T_i	0 = exterior temperature 1 = interior temperature
Linear Transmittance	ψ	Incremental increase in transmittance per linear length of corner

[1]Assumptions and limitations for surface temperatures identified in ASHRAE 1365-RP

Nominal (1D) vs. Assembly Performance Indicators

Exterior Insulation 1D R-Value (RSI)	R_{1D} ft²·hr·°F / Btu (m² K / W)	R_o ft²·hr·°F / Btu (m² K / W)	U_o Btu/ft² ·hr ·°F (W/m² K)	R ft²·hr·°F / Btu (m² K / W)	U Btu/ft² ·hr ·°F (W/m² K)	ψ Btu/ft hr °F (W/m K)
R-7.5 (1.32)	R-10.2 (1.80)	R-10.0 (1.76)	0.100 (0.57)	R-8.7 (1.53)	0.120 (0.65)	0.060 (0.105)
R-11.3 (1.98)	R-13.9 (2.46)	R-13.7 (2.41)	0.073 (0.41)	R-11.7 (2.05)	0.090 (0.49)	0.051 (0.088)
R-15 (2.64)	R-17.7 (3.12)	R-17.4 (3.06)	0.057 (0.33)	R-14.6 (2.57)	0.070 (0.39)	0.044 (0.076)

Temperature Indices

	R7.5	R11.3	R15	
T_{i1}	0.64	0.71	0.76	Min T on sheathing, between studs
T_{i2}	0.81	0.86	0.89	Max T on sheathing, along studs away from corner
T_{i3}	0.83	0.87	0.90	Min T on drywall, at corner

Detail 5.6.2

Exterior and Interior Insulated 3 5/8" x 1 5/8" Steel Stud (16" o.c.) Drained EIFS Wall Assembly – Corner Intersection

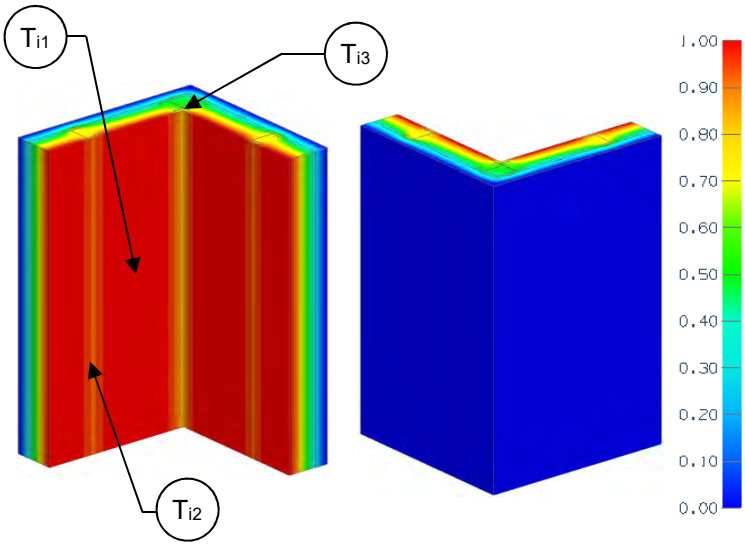

View from Interior View from Exterior

Thermal Performance Indicators

Assembly 1D (Nominal) R-Value	R_{1D}	R-14.2 (2.51 RSI) + exterior insulation
Transmittance / Resistance without Anomaly	U_o, R_o	"clear wall" U- and R-value, without corner
Transmittance / Resistance	U, R	U and R-values for the overall assembly
Surface Temperature Index[1]	T_i	0 = exterior temperature 1 = interior temperature
Linear Transmittance	ψ	Incremental increase in transmittance per linear length of corner

[1]Assumptions and limitations for surface temperatures identified in ASHRAE 1365-RP

Nominal (1D) vs. Assembly Performance Indicators

Exterior Insulation 1D R-Value (RSI)	R_{1D} ft²·hr·°F / Btu (m² K / W)	R_o ft²·hr·°F / Btu (m² K / W)	U_o Btu/ft² ·hr ·°F (W/m² K)	R ft²·hr·°F / Btu (m² K / W)	U Btu/ft² ·hr ·°F (W/m² K)	ψ Btu/ft hr °F (W/m K)
R-7.5 (1.32)	R-21.7 (3.83)	R-16.6 (2.93)	0.060 (0.34)	R-14.3 (2.52)	0.07 (0.40)	0.039 (0.067)
R-15 (2.64)	R-29.2 (5.15)	R-24.0 (4.23)	0.042 (0.24)	R-20.2 (3.56)	0.05 (0.28)	0.031 (0.054)

Temperature Indices

	R7.5	R15	
T_{i1}	0.39	0.56	Min T on sheathing, between studs
T_{i2}	0.66	0.77	Max T on sheathing, along studs away from corner
T_{i3}	0.75	0.81	Min T on drywall, at corner

Detail 5.6.3

Exterior Insulated 3 5/8″ x 1 5/8″ Steel Stud (16″ O.C.) Wall Assembly with Horizontal Z-Girts (24″ O.C.) Supporting Metal Cladding – Corner Intersection

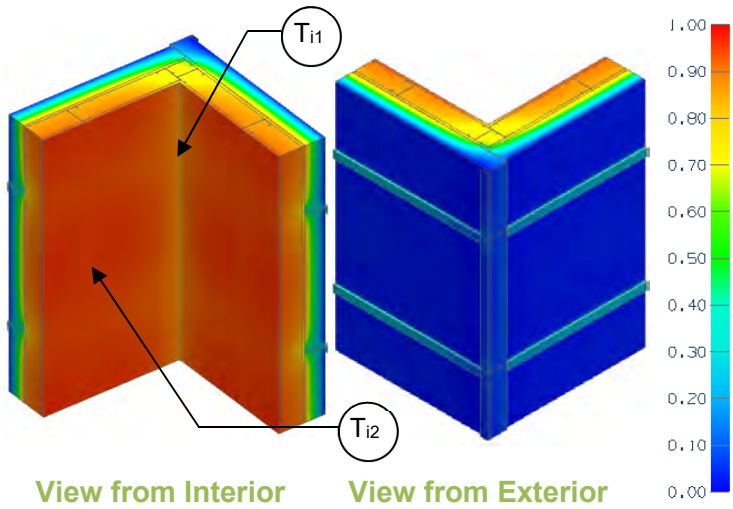

Thermal Performance Indicators

Assembly 1D (Nominal) R-Value	R_{1D}	R-3.2 (0.56 RSI) + exterior insulation
Transmittance / Resistance without Anomaly	U_o, R_o	"clear wall" U- and R-value, without corner
Transmittance / Resistance	U, R	U and R-values for the overall assembly
Surface Temperature Index[1]	T_i	0 = exterior temperature 1 = interior temperature
Linear Transmittance	ψ	Incremental increase in transmittance per linear length of corner

[1]Assumptions and limitations for surface temperatures identified in ASHRAE 1365-RP

Nominal (1D) vs. Assembly Performance Indicators

Exterior Insulation 1D R-Value (RSI)	R_{1D} ft²·hr·°F / Btu (m² K / W)	R_o ft²·hr·°F / Btu (m² K / W)	U_o Btu/ft² ·hr ·°F (W/m² K)	R ft²·hr·°F / Btu (m² K / W)	U Btu/ft² ·hr ·°F (W/m² K)	ψ Btu/ft hr °F (W/m K)
R-5 (0.88)	R-8.2 (1.44)	R-6.8 (1.21)	0.146 (0.83)	R-5.9 (1.04)	0.169 (0.96)	0.092 (0.160)
R-10 (1.76)	R-13.2 (2.32)	R-9.4 (1.66)	0.106 (0.60)	R-7.7 (1.36)	0.129 (0.73)	0.091 (0.158)
R-15 (2.64)	R-18.2 (3.20)	R-11.3 (1.99)	0.088 (0.50)	R-9.0 (1.59)	0.111 (0.63)	0.089 (0.154)
R-20 (3.52)	R-23.2 (4.08)	R-13.1 (2.31)	0.076 (0.43)	R-10.1 (1.77)	0.099 (0.56)	0.092 (0.160)
R-25 (4.40)	R-28.2 (4.96)	R-14.5 (2.56)	0.069 (0.39)	R-10.9 (1.92)	0.091 (0.52)	0.091 (0.158)

Temperature Indices

	R5	R10	R15	R20	R25	
T_{i1}	0.36	0.42	0.45	0.48	0.50	Min T on sheathing, along studs at girts and corner intersection
T_{i2}	0.76	0.83	0.87	0.89	0.90	Max T on sheathing, at steel studs, between girts, away from corner

Detail 5.6.4

Exterior Insulated 3 5/8″ x 1 5/8″ Steel Stud (16″ O.C.) Wall Assembly with Horizontal Z-Girts (24″ O.C.) Supporting Metal Cladding – Corner Intersection with Alternative Framing

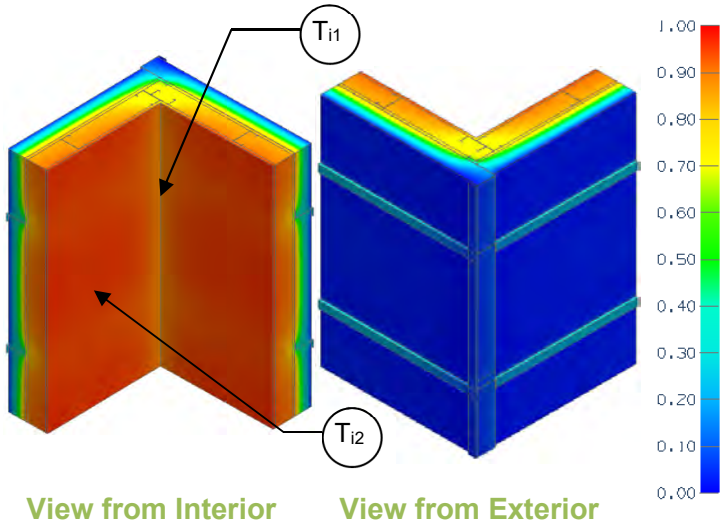

Thermal Performance Indicators

Assembly 1D (Nominal) R-Value	R_{1D}	R-3.2 (0.56 RSI) + exterior insulation
Transmittance / Resistance without Anomaly	U_o, R_o	"clear wall" U- and R-value, without corner
Transmittance / Resistance	U, R	U and R-values for the overall assembly
Surface Temperature Index[1]	T_i	0 = exterior temperature 1 = interior temperature
Linear Transmittance	ψ	Incremental increase in transmittance per linear length of corner

[1]Assumptions and limitations for surface temperatures identified in ASHRAE 1365-RP

Nominal (1D) vs. Assembly Performance Indicators

Exterior Insulation 1D R-Value (RSI)	R_{1D} ft²·hr·°F / Btu (m² K / W)	R_o ft²·hr·°F / Btu (m² K / W)	U_o Btu/ft² ·hr ·°F (W/m² K)	R ft²·hr·°F / Btu (m² K / W)	U Btu/ft² ·hr ·°F (W/m² K)	ψ Btu/ft hr °F (W/m K)
R-5 (0.88)	R-8.2 (1.44)	R-6.9 (1.21)	0.146 (0.83)	R-5.9 (1.05)	0.168 (0.96)	0.089 (0.153)
R-10 (1.76)	R-13.2 (2.32)	R-9.4 (1.66)	0.106 (0.60)	R-7.8 (1.37)	0.128 (0.73)	0.087 (0.152)
R-15 (2.64)	R-18.2 (3.20)	R-11.3 (1.99)	0.088 (0.50)	R-9.1 (1.61)	0.110 (0.62)	0.085 (0.147)
R-20 (3.52)	R-23.2 (4.08)	R-13.1 (2.31)	0.076 (0.43)	R-10.2 (1.79)	0.098 (0.56)	0.088 (0.152)
R-25 (4.40)	R-28.2 (4.96)	R-14.6 (2.56)	0.069 (0.39)	R-11.1 (1.95)	0.090 (0.51)	0.086 (0.149)

Temperature Indices

	R5	R10	R15	R20	R25	
T_{i1}	0.36	0.42	0.46	0.48	0.51	Min T on sheathing, along studs at girts and corner intersection
T_{i2}	0.76	0.83	0.86	0.89	0.90	Max T on sheathing, at steel studs, between girts, away from corner

Detail 5.6.5

Exterior and Interior Insulated 3 5/8" x 1 5/8" Steel Stud (16" o.c.) Wall Assembly with Horizontal Z-girts (24" o.c.) Supporting Metal Cladding – Corner Intersection

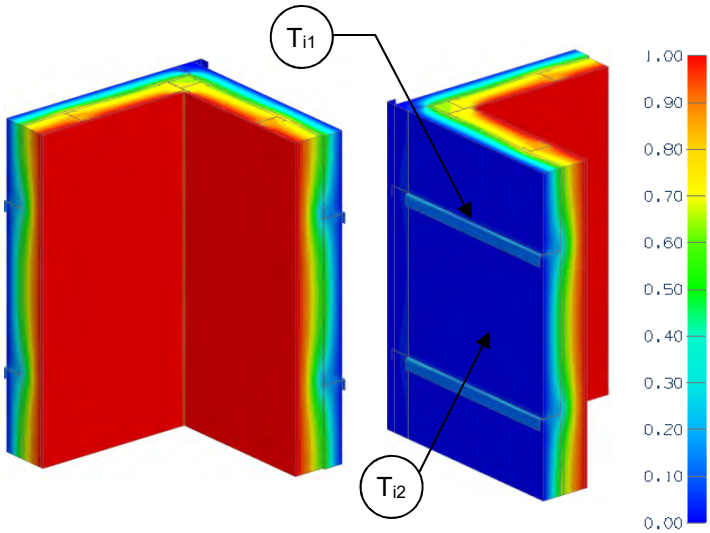

View from Interior View from Exterior

Thermal Performance Indicators

Assembly 1D (Nominal) R-Value	R_{1D}	R-14.2 (2.50 RSI) + exterior insulation
Transmittance / Resistance without Anomaly	U_o, R_o	"clear wall" U- and R-value, without corner
Transmittance / Resistance	U, R	U- and R-values for overall assembly
Surface Temperature Index[1]	T_i	0 = exterior temperature 1 = interior temperature
Linear Transmittance	ψ	Incremental increase in transmittance per linear length of corner

[1]Assumptions and limitations for surface temperatures identified in ASHRAE 1365-RP

Nominal (1D) vs. Assembly Performance Indicators

Exterior Insulation 1D R-Value (RSI)	R_{1D} ft²·hr·°F / Btu (m² K / W)	R_o ft²·hr·°F / Btu (m² K / W)	U_o Btu/ft² ·hr ·°F (W/m² K)	R ft²·hr·°F / Btu (m² K / W)	U Btu/ft² ·hr ·°F (W/m² K)	ψ Btu/ft ·hr·°F (W/m K)
R-10 (1.76)	R-24.2 (4.26)	R-16.3 (2.87)	0.061 (0.35)	R-11.3 (1.99)	0.089 (0.50)	0.105 (0.181)
R-15 (2.64)	R-29.2 (5.14)	R-18.5 (3.25)	0.054 (0.31)	R-12.7 (2.23)	0.079 (0.45)	0.098 (0.170)

Temperature Indices

	R10	R15	
T_{i1}	0.29	0.33	Min T on sheathing, along girts, between studs
T_{i2}	0.71	0.75	Max T on sheathing, along studs, between girts

Detail 5.6.6

Window Wall System – Transition to Exterior Insulated Steel Stud Wall Assembly with Horizontal Z-girts (24" o.c.) Supporting Metal Cladding & No Interior Stud Cavity Insulation

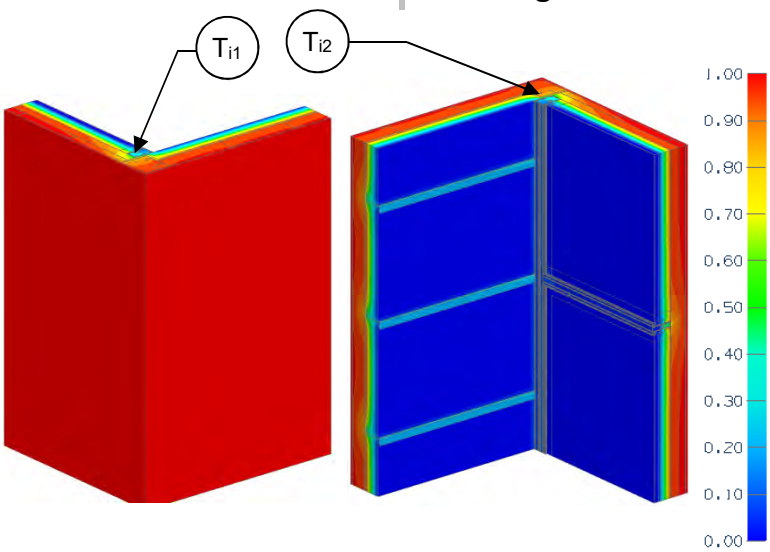

View from Interior View from Exterior

Thermal Performance Indicators

Assembly 1D (Nominal) R-Value	R_{1Dw}	Stud wall, R-3.2 (0.56 RSI) + exterior insulation
Assembly 1D (Nominal) R-Value	R_{1Ds}	Spandrel wall, R-3.6 (0.64 RSI) + backpan insulation
Transmittance / Resistance without Anomaly	U_w, R_w, U_s, R_w	"clear wall" U- and R-values for w = stud wall s = spandrel wall
Transmittance / Resistance	U, R	U- and R-values for overall assembly
Surface Temperature Index[1]	T_i	0 = exterior temperature 1 = interior temperature
Linear Transmittance	ψ	Incremental increase in transmittance per linear length of corner transition

[1]Assumptions and limitations for surface temperatures identified in ASHRAE 1365-RP

Nominal (1D) vs. Assembly Performance Indicators

Base Assembly – Steel Stud Wall

Exterior Insulation 1D R-Value (RSI)	R_{1wD} ft²·hr·°F / Btu (m² K / W)	R_w ft²·hr·°F / Btu (m² K / W)	U_w Btu/ft² ·hr ·°F (W/m² K)
R-15 (2.64)	R-18.2 (3.20)	R-11.3 (1.99)	0.088 (0.50)
R-25 (4.40)	R-28.2 (4.96)	R-14.5 (2.56)	0.069 (0.39)

Base Assembly – Spandrel Wall

Backpan Insulation 1D R-Value (RSI)	R_{1Ds} ft²·hr·°F / Btu (m² K / W)	R_s ft²·hr·°F / Btu (m² K / W)	U_s Btu/ft² ·hr ·°F (W/m² K)
R-16.8 (2.96)	R-20.4 (3.60)	R-7.7 (1.36)	0.130 (0.74)

Corner Linear Transmittance

Exterior Insulation 1D R-Value (RSI)	R ft²·hr·°F / Btu (m² K / W)	U Btu/ft² ·hr ·°F (W/m² K)	ψ Btu/ft ·hr·°F (W/m K)
R-15 (2.64)	R-7.9 (1.38)	0.127 (0.72)	0.120 (0.207)
R-25 (4.40)	R-8.5 (1.49)	0.118 (0.67)	0.125 (0.217)

Temperature Indices

	R15	R25	
T_{i1}	0.63	0.64	Min T on sheathing, at corner
T_{i2}	0.39	0.39	Min T on interior side of spandrel, on vertical frame at corner

Detail 5.6.7

Window Wall System – Transition to Exterior Insulated Steel Stud Wall Assembly with Horizontal Z-girts (24" o.c.) Supporting Metal Cladding & Interior Sprayfoam and Fibreglass Batt Insulation

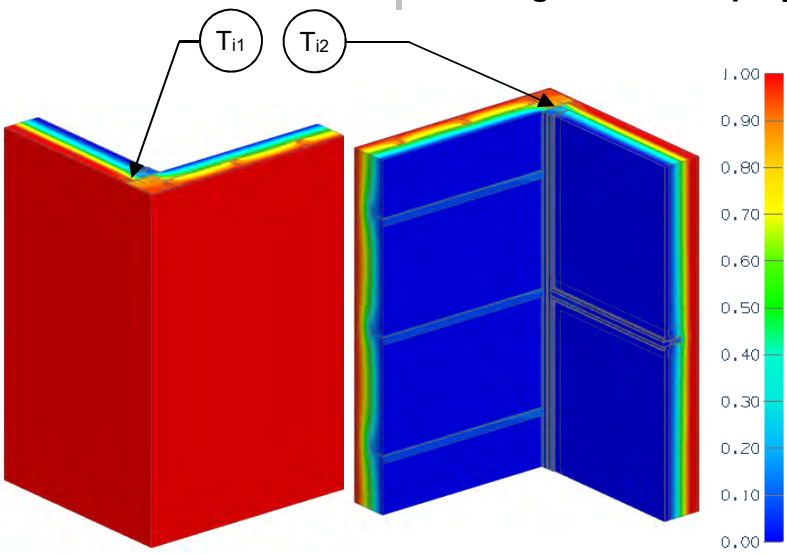

View from Interior View from Exterior

Thermal Performance Indicators

Assembly 1D (Nominal) R-Value	R_{1Dw}	Stud wall, R-14.3 (2.52 RSI) + exterior insulation
Assembly 1D (Nominal) R-Value	R_{1Ds}	Spandrel wall, R-14.7 (2.59 RSI) + backpan insulation
Transmittance / Resistance without Anomaly	U_w, R_w, U_s, R_w	"clear wall" U- and R-values for w = stud wall s = spandrel wall
Transmittance / Resistance	U, R	U- and R-values for overall assembly
Surface Temperature Index[1]	T_i	0 = exterior temperature 1 = interior temperature
Linear Transmittance	ψ	Incremental increase in transmittance per linear length of corner transition

[1]Assumptions and limitations for surface temperatures identified in ASHRAE 1365-RP

Nominal (1D) vs. Assembly Performance Indicators

Base Assembly – Steel Stud Wall

Exterior Insulation 1D R-Value (RSI)	R_{1Dw} ft²·hr·°F / Btu (m² K / W)	R_w ft²·hr·°F / Btu (m² K / W)	U_w Btu/ft² ·hr ·°F (W/m² K)
R-15 (2.64)	R-29.2 (5.14)	R-18.5 (3.25)	0.054 (0.31)
R-25 (4.40)	R-39.2 (6.90)	R-22.1 (3.90)	0.045 (0.26)

Base Assembly – Spandrel Wall

Backpan Insulation 1D R-Value (RSI)	R_{1Ds} ft²·hr·°F / Btu (m² K / W)	R_s ft²·hr·°F / Btu (m² K / W)	U_s Btu/ft² ·hr ·°F (W/m² K)
R-16.8 (2.96)	R-31.5 (5.55)	R-17.5 (3.08)	0.057 (0.33)

Corner Linear Transmittance

Exterior Insulation 1D R-Value (RSI)	R ft²·hr·°F / Btu (m² K / W)	U Btu/ft² ·hr ·°F (W/m² K)	ψ Btu/ft ·hr·°F (W/m K)
R-15 (2.64)	R-12.9 (2.27)	0.078 (0.44)	0.137 (0.237)
R-25 (4.40)	R-13.7 (2.41)	0.073 (0.42)	0.138 (0.238)

Temperature Indices

	R15	R25	
T_{i1}	0.57	0.58	Min T on sheathing, at corner
T_{i2}	0.90	0.91	Min T on interior side of spandrel, on sprayfoam in front of vertical frame

Detail 5.7.1

Exterior and Interior Insulated 3 5/8″ x 1 5/8″ Steel Stud (16″ o.c) Wall Assembly with Horizontal Z-Girts (24″ o.c.) Supporting Metal Cladding – Structural Steel Column & Cantilever Beam Intersection (Canopy Support)

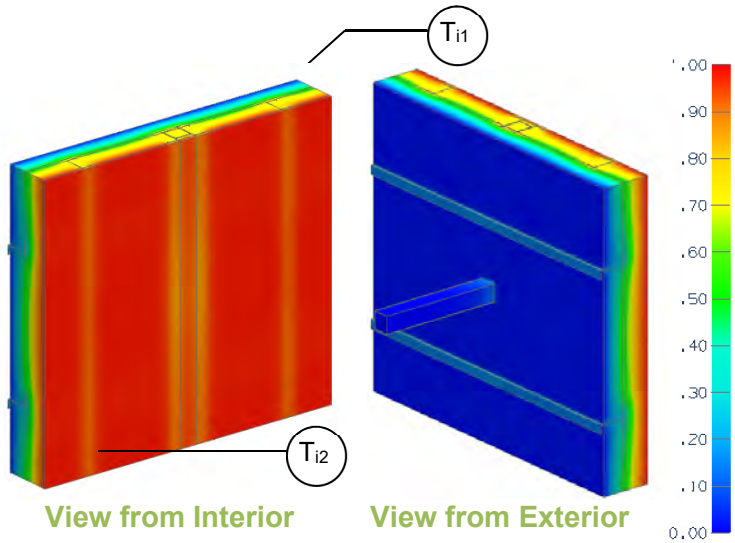

Thermal Performance Indicators

Assembly 1D (Nominal) R-Value	R_{1D}	R-14.2 (2.5 RSI) + exterior insulation
Transmittance / Resistance without Anomaly	U_o, R_o	"clear wall" U- and R-value, without beam and post
Transmittance / Resistance	U_c, R_c,	U- and R-values for stud wall with column
Transmittance / Resistance	U, R	U- and R-values for overall assembly
Surface Temperature Index[1]	T_i	0 = exterior temperature 1 = interior temperature
Linear Transmittance	ψ	Incremental increase in transmittance per length of steel column
Point Transmittance	χ	Incremental increase in transmittance for steel beam attached to post

[1]Assumptions and limitations for surface temperatures identified in ASHRAE 1365-RP

Nominal (1D) vs. Assembly Performance Indicators

Base Assembly – Wall

Exterior Insulation 1D R-Value (RSI)	R_{1D} ft²·hr·°F / Btu (m² K / W)	R_o ft²·hr·°F / Btu (m² K / W)	U_o Btu/ft² ·hr ·°F (W/m² K)
R-5 (0.88)	R-19.2 (3.38)	R-13.4 (2.36)	0.075 (0.42)
R-15 (2.64)	R-29.2 (5.14)	R-18.5 (3.25)	0.054 (0.31)
R-25 (4.40)	R-39.2 (6.90)	R-22.1 (3.90)	0.045 (0.26)

Column Linear Transmittance

R_c ft²·hr·°F / Btu (m² K / W)	U_c Btu/ft² ·hr ·°F (W/m² K)	ψ Btu/ft hr °F (W/m K)
R-12.1 (2.13)	0.082 (0.47)	0.034 (0.060)
R-16.6 (2.92)	0.060 (0.34)	0.027 (0.047)
R-19.9 (3.49)	0.050 (0.29)	0.023 (0.040)

Beam Point Transmittance

Exterior Insulation 1D R-Value (RSI)	R ft²·hr·°F / Btu (m² K / W)	U Btu/ft² ·hr ·°F (W/m² K)	χ Btu/hr °F (W/K)
R-5 (0.88)	R- 11.0 (1.93)	0.091 (0.52)	0.16 (0.08)
R-15 (2.64)	R- 14.4 (2.54)	0.069 (0.39)	0.16 (0.08)
R-25 (4.40)	R-16.9 (2.97)	0.059 (0.34)	0.16 (0.08)

Temperature Indices

	R5	R15	R25	
T_{i1}	0.23	0.35	0.42	Min T on sheathing, along girt between studs, away from post
T_{i2}	0.58	0.71	0.76	Max T on sheathing, at studs, between z girts, away from post

Detail 5.7.2

Exterior and Interior Insulated 3 5/8" x 1 5/8" Steel Stud (16" o.c.) Wall Assembly with Horizontal Z-girts (24" o.c.) Supporting Metal Cladding – Structural Steel Floor Intersection with Uninterrupted Beam

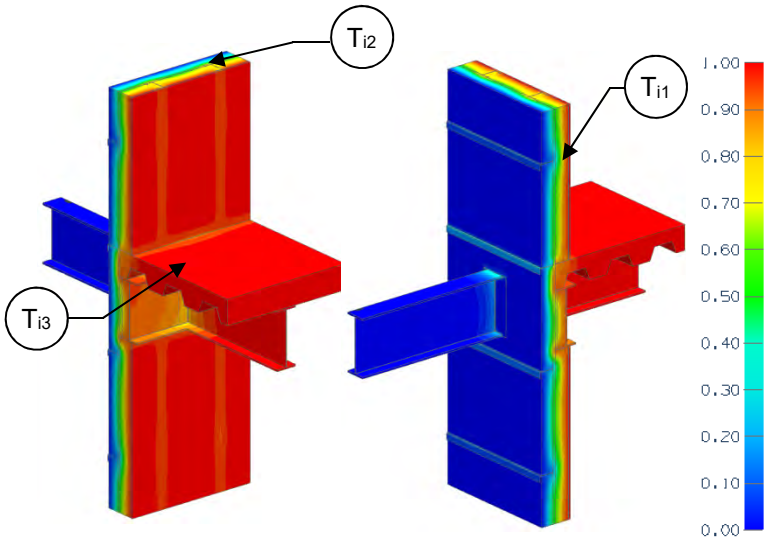

View from Interior View from Exterior

Thermal Performance Indicators

Assembly 1D (Nominal) R-Value	R_{1D}	R-14.3 (2.52 RSI) + exterior insulation
Transmittance / Resistance without Anomaly	U_o, R_o	"clear wall" U- and R-value without slab or beam
Transmittance / Resistance	U_s, R_s, U_t, R_t	U and R-values for s = steel stud wall + slab t = combined wall + slab + beam
Surface Temperature Index[1]	T_i	0 = exterior temperature 1 = interior temperature
Linear Transmittance	ψ	Incremental increase in transmittance per linear length of floor slab
Point Transmittance	χ	Incremental increase in transmittance for beam penetration

[1]Assumptions and limitations for surface temperatures identified in ASHRAE 1365-RP

Nominal (1D) vs. Assembly Performance Indicators

Base Assembly – Wall

Wall Exterior Insulation 1D R-Value (RSI)	R_{1D} ft²·hr·°F / Btu (m² K / W)	R_o ft²·hr·°F / Btu (m² K / W)	U_o Btu/ft² ·hr ·°F (W/m² K)
R-15 (2.64)	R-29.3 (5.16)	R-18.6 (3.28)	0.054 (0.31)

Slab Linear Transmittance

R_s ft²·hr·°F / Btu (m² K / W)	U_s Btu/ft² ·hr ·°F (W/m² K)	ψ Btu/ft hr °F (W/m K)
R-15.6 (2.74)	0.064 (0.36)	0.084 (0.146)

Beam Point Transmittance

Wall Exterior Insulation 1D R-Value (RSI)	R_t ft²·hr·°F / Btu (m² K / W)	U_t Btu/ft² ·hr ·°F (W/m² K)	χ Btu/hr °F (W/K)
R-15 (2.64)	R-6.9 (1.21)	0.146 (0.83)	1.73 (0.92)

Temperature Indices

T_{i1}	0.35	Min T on sheathing away from slab, between studs at girts
T_{i2}	0.73	Max T on sheathing away from slab, between girts at studs
T_{i3}	0.52	Min T on beam exposed to interior air, top flange at I-beam intersection

Detail 5.7.3

Exterior and Interior Insulated 3 5/8" x 1 5/8" Steel Stud (16" o.c.) Wall Assembly with Horizontal Z-girts (24" o.c.) Supporting Metal Cladding – Structural Steel Floor Intersection with Isolator Pad

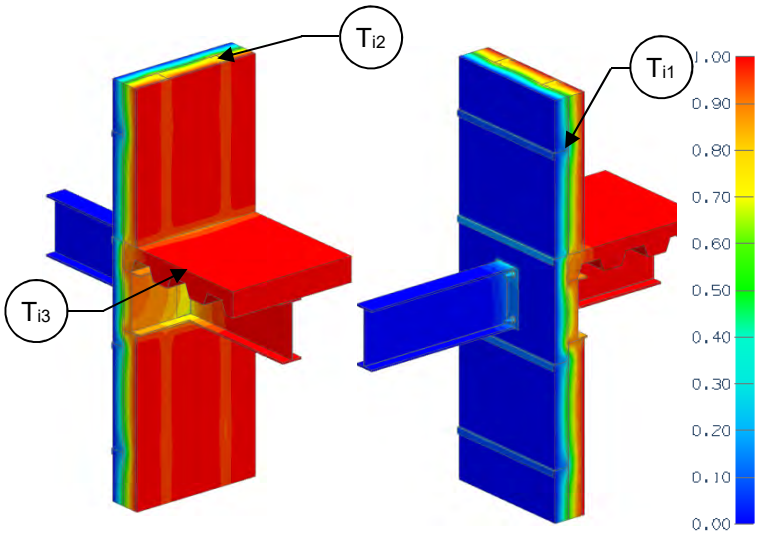

View from Interior View from Exterior

Thermal Performance Indicators

Assembly 1D (Nominal) R-Value	R_{1D}	R-14.3 (2.52 RSI) + exterior insulation
Transmittance / Resistance without Anomaly	U_o, R_o	"clear wall" U- and R-value without slab or beam
Transmittance / Resistance	U_s, R_s, U_t, R_t	U and R-values for s = steel stud wall + slab t = combined wall + slab + beam
Surface Temperature Index[1]	T_i	0 = exterior temperature 1 = interior temperature
Linear Transmittance	ψ	Incremental increase in transmittance per linear length of floor slab
Point Transmittance	χ	Incremental increase in transmittance for beam penetration

[1]Assumptions and limitations for surface temperatures identified in ASHRAE 1365-RP

Nominal (1D) vs. Assembly Performance Indicators

Base Assembly – Wall

Wall Exterior Insulation 1D R-Value (RSI)	R_{1D} ft²·hr·°F / Btu (m² K / W)	R_o ft²·hr·°F / Btu (m² K / W)	U_o Btu/ft² ·hr ·°F (W/m² K)
R-15 (2.64)	R-29.3 (5.16)	R-18.6 (3.28)	0.054 (0.31)

Slab Linear Transmittance

Wall Exterior Insulation 1D R-Value (RSI)	R_s ft²·hr·°F / Btu (m² K / W)	U_s Btu/ft² ·hr ·°F (W/m² K)	ψ Btu/ft hr °F (W/m K)
R-15 (2.64)	R-15.6 (2.74)	0.064 (0.36)	0.084 (0.146)

Beam Point Transmittance

Thermal Isolator Pad	R_t ft²·hr·°F / Btu (m² K / W)	U_t Btu/ft² ·hr ·°F (W/m² K)	χ Btu/hr °F (W/K)
5 mm pad, stainless steel bolts	R-6.0 (1.06)	0.167 (0.95)	2.17 (1.15)
5 mm pad, steel bolts	R-5.9 (1.04)	0.170 (0.97)	2.24 (1.19)
5 mm pad, stainless steel bolts, w/ R10 outboard of plates	R-6.4 (1.13)	0.156 (0.89)	1.80 (1.03)
10 mm pad, stainless steel bolts	R-6.7 (1.17)	0.150 (0.85)	1.82 (0.97)
10 mm pad, steel bolts	R-6.5 (1.15)	0.153 (0.87)	1.89 (1.00)

Temperature Indices

	5 mm pad, stainless bolts	5 mm pad, steel bolts	5 mm pad, stainless bolts, w/ R10	10 mm pad, stainless bolts	10 mm pad, steel bolts	
T_{i1}	0.35	0.35	0.35	0.35	0.35	Min T on sheathing away from slab, between studs at girts
T_{i2}	0.73	0.73	0.73	0.73	0.73	Max T on sheathing away from slab, between girts at studs
T_{i3}	0.33	0.32	0.39	0.42	0.41	Min T on beam exposed to interior air, top flange at I-beam intersection

Detail 5.7.4

Exterior and Interior Insulated 3 5/8" x 1 5/8" Steel Stud (16" o.c.) Wall Assembly with Horizontal Z-girts (24" o.c.) Supporting Metal Cladding – Structural Steel Floor Intersection with Isokorb S22 Thermally Broken Beam

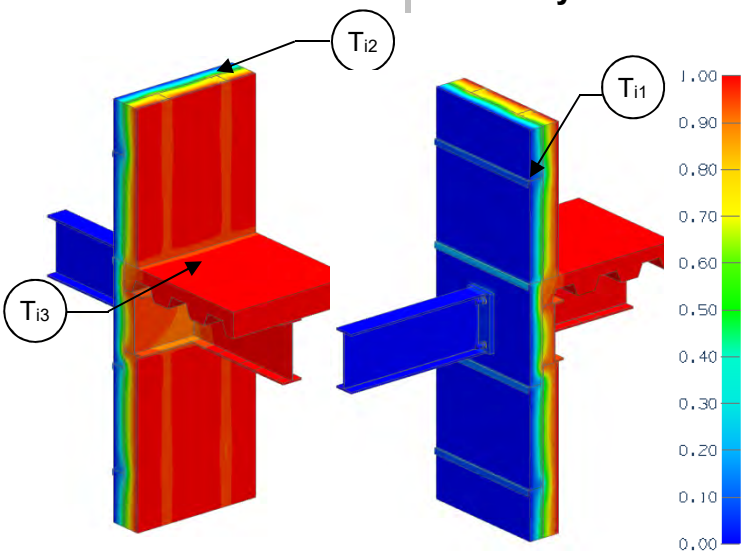

View from Interior View from Exterior

Thermal Performance Indicators

Assembly 1D (Nominal) R-Value	R_{1D}	R-14.3 (2.52 RSI) + exterior insulation
Transmittance / Resistance without Anomaly	U_o, R_o	"clear wall" U- and R-value without slab or beam
Transmittance / Resistance	U_s, R_s, U_t, R_t	U and R-values for s = steel stud wall + slab t = combined wall + slab + beam
Surface Temperature Index[1]	T_i	0 = exterior temperature 1 = interior temperature
Linear Transmittance	ψ	Incremental increase in transmittance per linear length of floor slab
Point Transmittance	χ	Incremental increase in transmittance for beam penetration

[1]Assumptions and limitations for surface temperatures identified in ASHRAE 1365-RP

Nominal (1D) vs. Assembly Performance Indicators

Base Assembly – Wall

Wall Exterior Insulation 1D R-Value (RSI)	R_{w1D} ft²·hr·°F / Btu (m² K / W)	R_o ft²·hr·°F / Btu (m² K / W)	U_o Btu/ft² ·hr ·°F (W/m² K)
R-15 (2.64)	R-29.2 (5.14)	R-18.5 (3.25)	0.054 (0.31)

Slab Transmittance

R_s ft²·hr·°F / Btu (m² K / W)	U_s Btu/ft² ·hr ·°F (W/m² K)	ψ Btu/ft hr °F (W/m K)
R-15.6 (2.74)	0.064 (0.36)	0.084 (0.146)

Beam Point Transmittance

Wall Exterior Insulation 1D R-Value (RSI)	R_t ft²·hr·°F / Btu (m² K / W)	U_t Btu/ft² ·hr ·°F (W/m² K)	χ Btu/hr °F (W/K)
R-15 (2.64)	R-9.4 (1.65)	0.107 (0.61)	0.91 (0.48)

Temperature Indices

T_{i1}	0.32	Min T on sheathing away from slab, between studs at girts
T_{i2}	0.89	Max T on sheathing away from slab, between girts at studs
T_{i3}	0.79	Min T on beam exposed to interior air, top flange at I-beam intersection

Detail 5.7.5

Exterior Insulated 3 5/8" x 1 5/8" Steel Stud (16" o.c.) Wall Assembly with Intermittent Vertical Z-girts (16" o.c.) Supporting Metal Cladding – Concrete Floor to Steel Beam Connection

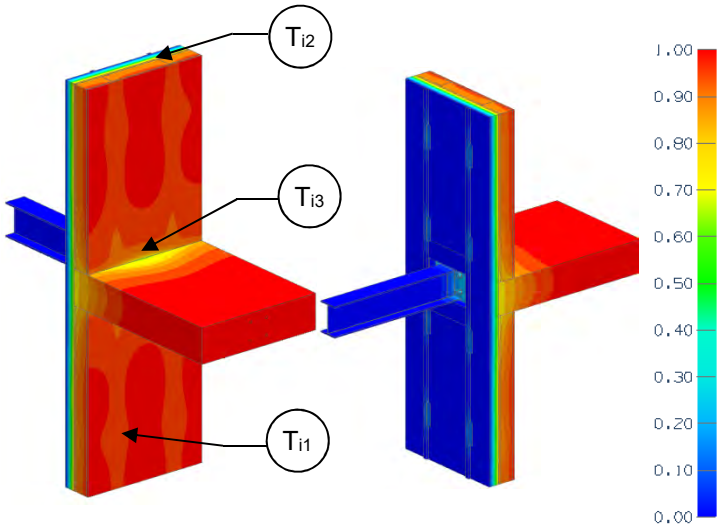

View from Interior View from Exterior

Thermal Performance Indicators

Assembly 1D (Nominal) R-Value	R_{1D}	R-3.2 (0.56 RSI) + exterior insulation
Transmittance / Resistance without Anomaly	U_o, R_o	"clear wall" U- and R-value without slab or beam
Transmittance / Resistance	U_s, R_s, U_t, R_t	U and R-values for s = steel stud wall + slab t = combined wall + slab + beam
Surface Temperature Index[1]	T_i	0 = exterior temperature 1 = interior temperature
Linear Transmittance	ψ	Incremental increase in transmittance per linear length of floor slab
Point Transmittance	χ	Incremental increase in transmittance for beam penetration

[1]Assumptions and limitations for surface temperatures identified in ASHRAE 1365-RP

Nominal (1D) vs. Assembly Performance Indicators

Base Assembly – Wall

Exterior Insulation 1D R-Value (RSI)	R_{1D} ft²·hr·°F / Btu (m² K / W)	R_o ft²·hr·°F / Btu (m² K / W)	U_o Btu/ft² ·hr ·°F (W/m² K)
R-15 (2.64)	R-18.2 (3.20)	R-13.8 (2.44)	0.072 (0.41)

Slab Transmittance

R_s ft²·hr·°F / Btu (m² K / W)	U_s Btu/ft² ·hr ·°F (W/m² K)	ψ Btu/ft hr °F (W/m K)
R-12.7 (2.24)	0.079 (0.45)	0.052 (0.090)

Beam Point Transmittance

Exterior Insulation 1D R-Value (RSI)	R_t ft²·hr·°F / Btu (m² K / W)	U_t Btu/ft² ·hr ·°F (W/m² K)	χ Btu/hr °F (W/K)
R-15 (2.64)	R-7.3 (1.28)	0.137 (0.78)	1.24 (0.66)

Temperature Indices

T_{i1}	0.44	Min T on sheathing, at slab, in line with beam
T_{i2}	0.88	Max T on sheathing, at studs, between clips
T_{i3}	0.40	Min T on slab exposed to interior air, at sheathing, in line with beam

Detail 5.7.6

Exterior Insulated 3 5/8" x 1 5/8" Steel Stud (16" o.c.) Wall Assembly with Intermittent Vertical Z-girts (16" o.c.) Supporting Metal Cladding – Concrete Floor to Steel Beam with a Thermal Isolator Pad Connection

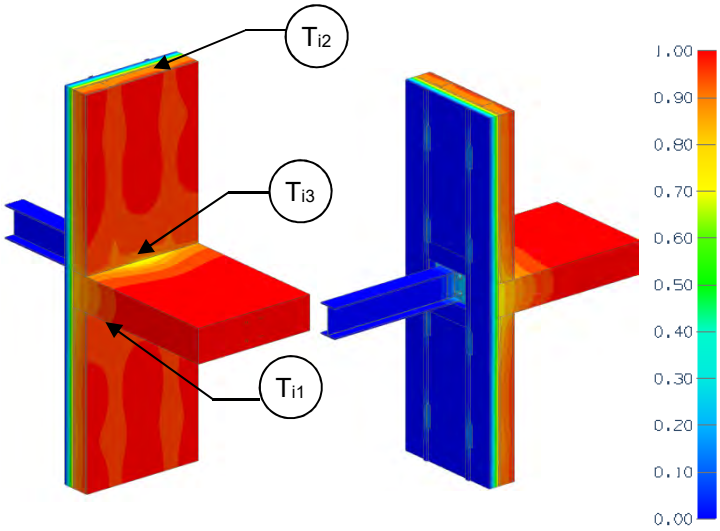

View from Interior View from Exterior

Thermal Performance Indicators

Assembly 1D (Nominal) R-Value	R_{1D}	R-3.2 (0.56 RSI) + exterior insulation
Transmittance / Resistance without Anomaly	U_o, R_o	"clear wall" U- and R-value without slab or beam
Transmittance / Resistance	U_s, R_s, U_t, R_t	U and R-values for s = steel stud wall + slab t = combined wall + slab + beam
Surface Temperature Index[1]	T_i	0 = exterior temperature 1 = interior temperature
Linear Transmittance	ψ	Incremental increase in transmittance per linear length of floor slab
Point Transmittance	χ	Incremental increase in transmittance for beam penetration

[1]Assumptions and limitations for surface temperatures identified in ASHRAE 1365-RP

Nominal (1D) vs. Assembly Performance Indicators

Base Assembly – Wall

Exterior Insulation 1D R-Value (RSI)	R_{1D} ft²·hr·°F / Btu (m² K / W)	R_o ft²·hr·°F / Btu (m² K / W)	U_o Btu/ft² ·hr ·°F (W/m² K)
R-15 (2.64)	R-18.2 (3.20)	R-13.8 (2.44)	0.072 (0.41)

Slab Transmittance

R_s ft²·hr·°F / Btu (m² K / W)	U_s Btu/ft² ·hr ·°F (W/m² K)	ψ Btu/ft hr °F (W/m K)
R-12.7 (2.24)	0.079 (0.45)	0.052 (0.090)

Beam Point Transmittance

Exterior Insulation 1D R-Value (RSI)	R_t ft²·hr·°F / Btu (m² K / W)	U_t Btu/ft² ·hr ·°F (W/m² K)	χ Btu/hr °F (W/K)
R-15 (2.64)	R-8.2 (1.45)	0.121 (0.69)	0.91 (0.48)

Temperature Indices

T_{i1}	0.44	Min T on sheathing, at slab, in line with beam
T_{i2}	0.88	Max T on sheathing, at studs, between clips
T_{i3}	0.54	Min T on slab exposed to interior air, at sheathing, in line with beam

Detail 5.7.7

Exterior Insulated 3 5/8" x 1 5/8" Steel Stud (16" o.c.) Wall Assembly with Intermittent Vertical Z-girts (16" o.c.) Supporting Metal Cladding – Concrete Floor to Steel Beam with Isokorb KS14 Connection

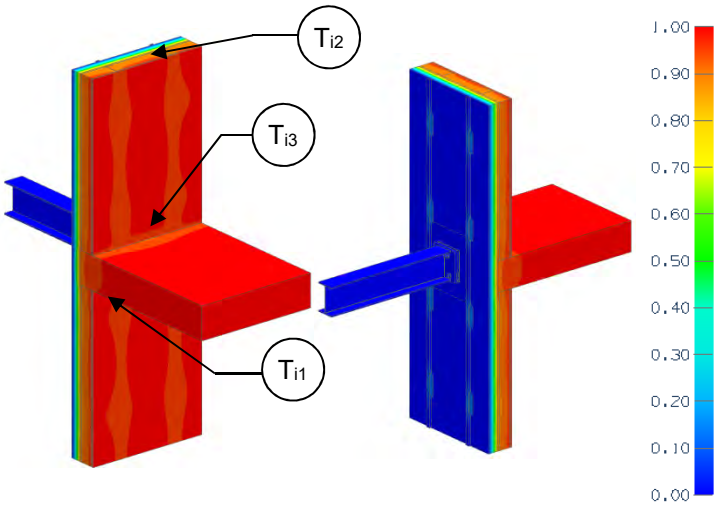

View from Interior View from Exterior

Thermal Performance Indicators

Assembly 1D (Nominal) R-Value	R_{1D}	R-3.2 (0.56 RSI) + exterior insulation
Transmittance / Resistance without Anomaly	U_o, R_o	"clear wall" U- and R-value without slab or beam
Transmittance / Resistance	U_s, R_s, U_t, R_t	U and R-values for s = steel stud wall + slab t = combined wall + slab + beam
Surface Temperature Index[1]	T_i	0 = exterior temperature 1 = interior temperature
Linear Transmittance	ψ_s	Incremental increase in transmittance per linear length of floor slab
Point Transmittance	χ	Incremental increase in transmittance for beam penetration

[1]Assumptions and limitations for surface temperatures identified in ASHRAE 1365-RP

Nominal (1D) vs. Assembly Performance Indicators

Base Assembly – Wall

Exterior Insulation 1D R-Value (RSI)	R_{1D} ft²·hr·°F / Btu (m² K / W)	R_o ft²·hr·°F / Btu (m² K / W)	U_o Btu/ft² ·hr ·°F (W/m² K)
R-15 (2.64)	R-18.2 (3.20)	R-13.8 (2.44)	0.072 (0.41)

Slab Transmittance

R_s ft²·hr·°F / Btu (m² K / W)	U_s Btu/ft² ·hr ·°F (W/m² K)	ψ_s Btu/ft hr °F (W/m K)
R-12.7 (2.24)	0.079 (0.45)	0.052 (0.090)

Beam Point Transmittance

Exterior Insulation 1D R-Value (RSI)	R_t ft²·hr·°F / Btu (m² K / W)	U_t Btu/ft² ·hr ·°F (W/m² K)	χ Btu/hr °F (W/K)
R-15 (2.64)	R-12.2 (2.14)	0.082 (0.47)	0.07 (0.04)

Temperature Indices

T_{i1}	0.44	Min T on sheathing, at slab, in line with beam
T_{i2}	0.88	Max T on sheathing, at studs, between clips
T_{i3}	0.84	Min T on slab exposed to interior air, at sheathing, in line with beam

Detail 5.7.8

Exterior and Interior Insulated 3 5/8" x 1 5/8" Steel Stud (16" o.c.) Wall Assembly with Horizontal Z-girts (24" o.c.) Supporting Metal Cladding – Structural Steel Floor Intersection with Beam Thermal Break

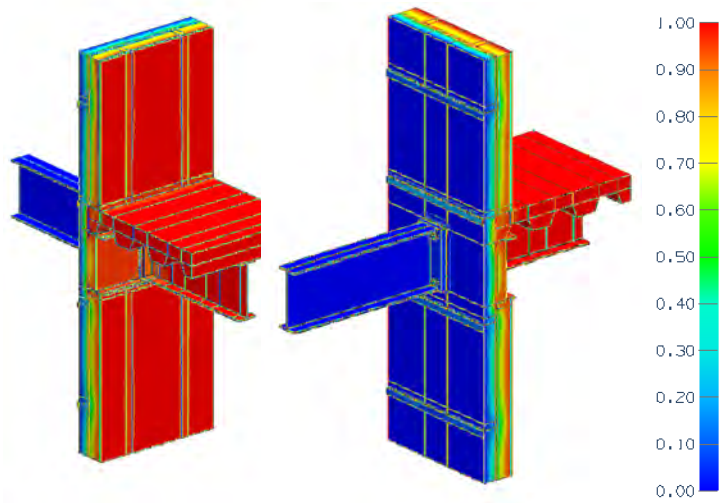

View from Interior View from Exterior

Thermal Performance Indicators

Assembly 1D (Nominal) R-Value	R_{1D}	R-14.3 (2.52 RSI) + exterior insulation
Transmittance / Resistance without Anomaly	U_o, R_o	"clear wall" U- and R-value without slab or beam
Transmittance / Resistance	U_s, R_s, U_t, R_t	U and R-values for s = steel stud wall + slab t = combined wall + slab + beam
Surface Temperature Index	T_i	0 = exterior temperature 1 = interior temperature
Linear Transmittance	ψ	Incremental increase in transmittance per linear length of floor slab
Point Transmittance	χ	Incremental increase in transmittance for beam penetration

[1]Assumptions and limitations for surface temperatures identified in ASHRAE 1365-RP

Scenario

Scenario	
1	25mm Armatherm FRR between pressure plates
2	25mm Armatherm FRR with Stainless Steel Fasteners
3	25mm Armatherm FRR with Stainless Steel Fasteners and Armatherm bushings/washers
4	50mm Armatherm with Stainless Steel Fasteners and Armatherm bushings/washers

Nominal (1D) vs. Assembly Performance Indicators

Base Assembly – Wall

Wall Exterior Insulation 1D R-Value (RSI)	R_{1D} ft²·hr·°F / Btu (m² K / W)	R_o ft²·hr·°F / Btu (m² K / W)	U_o Btu/ft² ·hr ·°F (W/m² K)
R-15 (2.64)	R-29.2 (5.14)	R-18.5 (3.25)	0.054 (0.31)

Slab Linear Transmittance

Wall Exterior Insulation 1D R-Value (RSI)	R_s ft²·hr·°F / Btu (m² K / W)	U_s Btu/ft² ·hr ·°F (W/m² K)	ψ Btu/ft hr °F (W/m K)
R-15 (2.64)	R-15.6 (2.74)	0.064 (0.36)	0.084 (0.146)

Beam Point Transmittance

Scenario	R_t ft²·hr·°F / Btu (m² K / W)	U_t Btu/ft² ·hr ·°F (W/m² K)	χ Btu/hr °F (W/K)
1	R-7.3 (1.28)	0.138 (0.78)	1.56 (0.83)
2	R-8.4 (1.48)	0.119 (0.68)	1.16 (0.62)
3	R-9.2 (1.61)	0.109 (0.62)	0.95 (0.50)
4	R-10.2 (1.79)	0.098 (0.56)	0.72 (0.38)

Detail 5.7.9

Exterior and Interior Insulated 3 5/8" x 1 5/8" Steel Stud (16" o.c.) Wall Assembly with Horizontal Z-girts (24" o.c.) Supporting Metal Cladding – Structural Steel Floor Intersection with Aerolon Coating

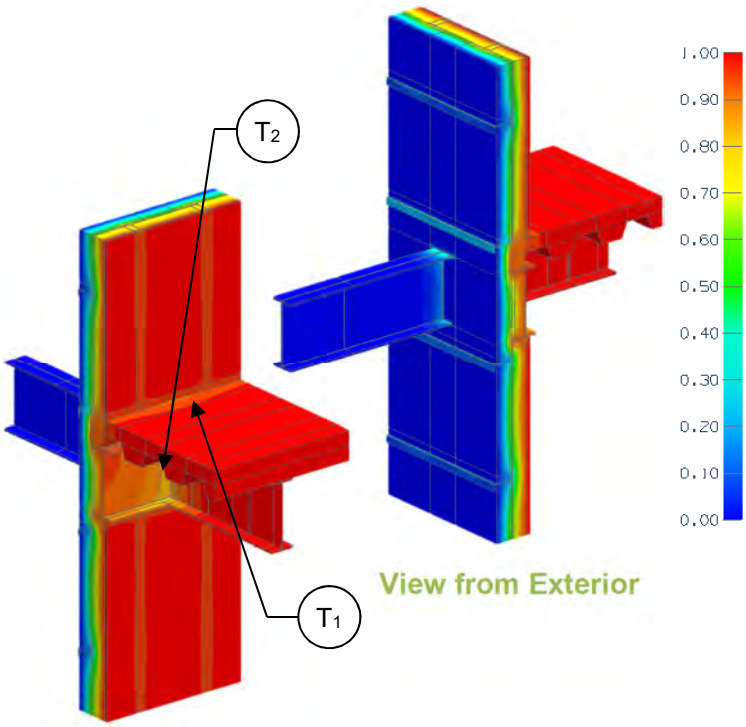

View from Interior

Thermal Performance Indicators

Assembly 1D (Nominal) R-Value	R_{1D}	R-14.3 (2.52 RSI) + exterior insulation
Transmittance / Resistance without Anomaly	U_o, R_o	"clear wall" U- and R-value without slab or beam
Transmittance / Resistance	U_s, R_s, U_t, R_t	U and R-values for s = steel stud wall + slab t = combined wall + slab + beam
Surface Temperature Index[1]	T_i	0 = exterior temperature 1 = interior temperature
Linear Transmittance	ψ	Incremental increase in transmittance per linear length of floor slab
Point Transmittance	χ	Incremental increase in transmittance for beam penetration

[1]Assumptions and limitations for surface temperatures identified in ASHRAE 1365-RP

Nominal (1D) vs. Assembly Performance Indicators

Base Assembly – Wall

Wall Exterior Insulation 1D R-Value (RSI)	R_{1D} ft²·hr·°F / Btu (m² K / W)	R_o ft²·hr·°F / Btu (m² K / W)	U_o Btu/ft² ·hr ·°F (W/m² K)
R-15 (2.64)	R-29.3 (5.16)	R-18.5 (3.25)	0.054 (0.31)

Slab Linear Transmittance

Wall Exterior Insulation 1D R-Value (RSI)	R_s ft²·hr·°F / Btu (m² K / W)	U_s Btu/ft² ·hr ·°F (W/m² K)	ψ Btu/ft hr °F (W/m K)
R-15 (2.64)	R-15.6 (2.75)	0.064 (0.36)	0.083 (0.143)

Beam Point Transmittance

R_t ft²·hr·°F / Btu (m² K / W)	U_t Btu/ft² ·hr ·°F (W/m² K)	χ Btu/hr °F (W/K)
R-8.4 (1.48)	0.119 (0.68)	1.17 (0.62)

Temperature Indices

T_1	0.59	Min T on coating at top flange of steel beam exposed to interior air
T_2	0.78	Min T on coating at underside of beam exposed to interior

Detail 5.7.10

Exterior Insulated 6'' x 1 5/8'' Steel Stud (16'' o.c.) Wall Assembly with FRP Vertical Brackets and Rail System Supporting Metal Cladding – Structural Steel Column & Knife Edge Cable Support Intersection

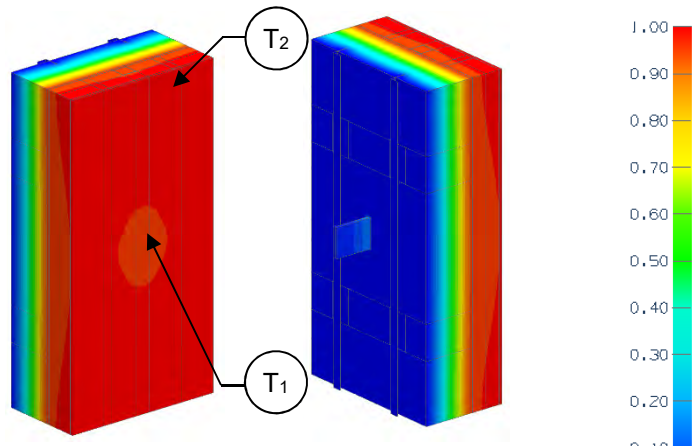

View from Interior View from Exterior

Thermal Performance Indicators

Assembly 1D (Nominal) R-Value	R_{1D}	R-3.2 (0.56 RSI) + exterior insulation
Transmittance / Resistance without Anomaly	U_o, R_o	"clear wall" U- and R-value without column and knife edge
Transmittance / Resistance	U_c, R_c	U- and R-values for column
Transmittance / Resistance	U, R	U- and R-values for overall assembly
Surface Temperature Index[1]	T_i	0 = exterior temperature 1 = interior temperature
Linear Transmittance	ψ	Incremental increase in transmittance per linear length of column
Point Transmittance	χ	Incremental increase in transmittance for knife edge penetration

[1]Assumptions and limitations for surface temperatures identified in ASHRAE 1365-RP

Nominal (1D) vs. Assembly Performance Indicators

Base Assembly – Wall

Exterior Insulation 1D R-Value (RSI)	R_{1D} ft²·hr·°F / Btu (m² K / W)	R_o ft²·hr·°F / Btu (m² K / W)	U_o Btu/ft² ·hr ·°F (W/m² K)
R-42 (7.40)	R-45.2 (7.96)	R-40.0 (7.04)	0.025 (0.14)

Column Linear Transmittance

R_c ft²·hr·°F / Btu (m² K / W)	U_c Btu/ft² ·hr ·°F (W/m² K)	ψ Btu/ft hr °F (W/m K)
R-39.9 (7.04)	0.025 (0.14)	0.000009 (0.00015)

Knife Edge Point Transmittance

Exterior Insulation 1D R-Value (RSI)	R ft²·hr·°F / Btu (m² K / W)	U Btu/ft² ·hr ·°F (W/m² K)	χ Btu/hr °F (W/K)
R-42 (7.40)	R-22.4 (3.95)	0.045 (0.25)	0.278 (0.147)

Temperature Indices

T_1	0.56	Min T on sheathing beside knife edge, at column
T_2	0.94	Max T on sheathing, at studs, away from knife edge

Detail 5.7.11

Exterior and Interior Insulated 6'' x 1 5/8'' Steel Stud (16'' o.c.) Wall Assembly with FRP Vertical Brackets and Rail System Supporting Metal Cladding with R-19 Batt in Stud Cavity – Structural Steel Column & Knife Edge Cable Support Intersection

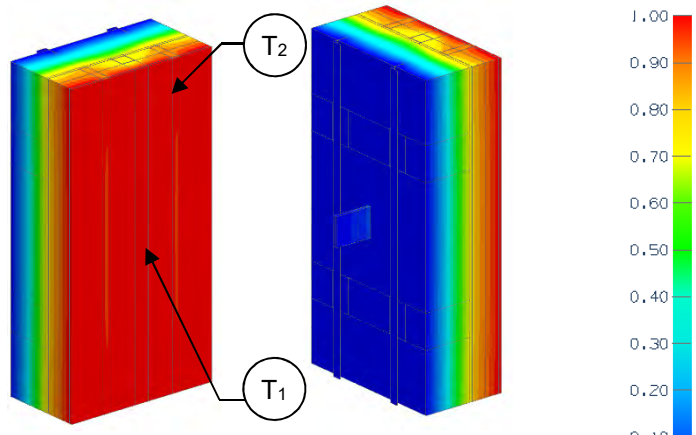

View from Interior View from Exterior

Thermal Performance Indicators

Assembly 1D (Nominal) R-Value	R_{1D}	R-21.3 (3.75 RSI) + exterior insulation
Transmittance / Resistance without Anomaly	U_o, R_o	"clear wall" U- and R-value without column and knife edge
Transmittance / Resistance	U_c, R_c	U- and R-values for column
Transmittance / Resistance	U, R	U- and R-values for overall assembly
Surface Temperature Index[1]	T_i	0 = exterior temperature 1 = interior temperature
Linear Transmittance	ψ	Incremental increase in transmittance per linear length of column
Point Transmittance	χ	Incremental increase in transmittance for knife edge penetration

[1]Assumptions and limitations for surface temperatures identified in ASHRAE 1365-RP

Nominal (1D) vs. Assembly Performance Indicators

Base Assembly – Wall

Exterior Insulation 1D R-Value (RSI)	R_{1D} ft²·hr·°F / Btu (m² K / W)	R_o ft²·hr·°F / Btu (m² K / W)	U_o Btu/ft² ·hr ·°F (W/m² K)
R-42 (7.40)	R-63.3 (11.15)	R-48.3 (8.51)	0.021 (0.12)

Column Linear Transmittance

R_c ft²·hr·°F / Btu (m² K / W)	U_c Btu/ft² ·hr ·°F (W/m² K)	ψ Btu/ft hr °F (W/m K)
R-47.7 (8.40)	0.021 (0.12)	0.00070 (0.0012)

Knife Edge Point Transmittance

Exterior Insulation 1D R-Value (RSI)	R ft²·hr·°F / Btu (m² K / W)	U Btu/ft² ·hr ·°F (W/m² K)	χ Btu/hr °F (W/K)
R-42 (7.40)	R-32.9 (5.79)	0.030 (0.17)	0.134 (0.071)

Temperature Indices

T_1	0.32	Min T on sheathing beside knife edge, at column
T_2	0.82	Max T on sheathing, at studs, away from knife edge

Detail 5.7.12

Exterior and Interior Insulated 3 5/8" x 1 5/8" Steel Stud (16" o.c.) Wall Assembly with Horizontal Z-girts (24" o.c.) Supporting Metal Cladding – Structural Steel Floor Intersection with Thermal Isolator Pad

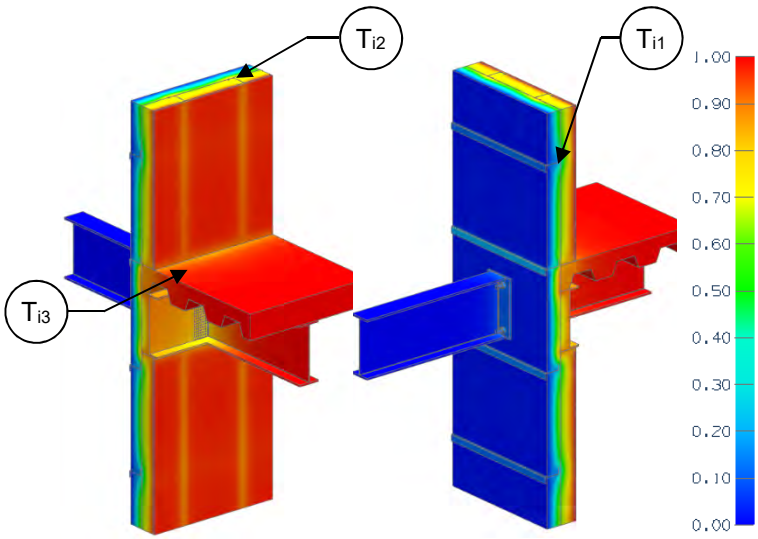

View from Interior View from Exterior

Thermal Performance Indicators

Assembly 1D (Nominal) R-Value	R_{1D}	R-14.3 (2.52 RSI) + exterior insulation
Transmittance / Resistance without Anomaly	U_o, R_o	"clear wall" U- and R-value without slab or beam
Transmittance / Resistance	U_s, R_s, U_t, R_t	U and R-values for s = steel stud wall + slab t = combined wall + slab + beam
Surface Temperature Index[1]	T_i	0 = exterior temperature 1 = interior temperature
Linear Transmittance	ψ	Incremental increase in transmittance per linear length of floor slab
Point Transmittance	χ	Incremental increase in transmittance for beam penetration

[1]Assumptions and limitations for surface temperatures identified in ASHRAE 1365-RP

Nominal (1D) vs. Assembly Performance Indicators

Base Assembly – Wall

Wall Exterior Insulation 1D R-Value (RSI)	R_{1D} ft²·hr·°F / Btu (m² K / W)	R_o ft²·hr·°F / Btu (m² K / W)	U_o Btu/ft² ·hr ·°F (W/m² K)
R-15 (2.64)	R-29.3 (5.16)	R-18.6 (3.28)	0.054 (0.31)

Slab Linear Transmittance

Wall Exterior Insulation 1D R-Value (RSI)	R_s ft²·hr·°F / Btu (m² K / W)	U_s Btu/ft² ·hr ·°F (W/m² K)	ψ Btu/ft hr °F (W/m K)
R-15 (2.64)	R-15.6 (2.74)	0.064 (0.36)	0.084 (0.146)

Beam Point Transmittance

Thermal Isolator Pad	R_t ft²·hr·°F / Btu (m² K / W)	U_t Btu/ft² ·hr ·°F (W/m² K)	χ Btu/hr °F (W/K)
25 mm pad, stainless steel bolts	R-8.6 (1.51)	0.117 (0.66)	1.11 (0.59)
25 mm pad, steel bolts	R-7.6 (1.33)	0.132 (0.75)	1.44 (0.77)
38 mm pad, stainless steel bolts	R-8.9 (1.56)	0.113 (0.64)	1.02 (0.54)
38 mm pad, steel bolts	R-7.6 (1.34)	0.132 (0.75)	1.43 (0.76)
50 mm pad, stainless steel bolts	R-9.3 (1.64)	0.107 (0.61)	0.91 (0.49)
50 mm pad, steel bolts	R-7.9 (1.38)	0.127 (0.72)	1.34 (0.71)

Temperature Indices

	25 mm pad, stainless bolts	25 mm pad, steel bolts	38 mm pad, stainless bolts	38 mm pad, steel bolts	50 mm pad, stainless bolts	50 mm pad, steel bolts	
T_{i1}	0.33	0.33	0.33	0.33	0.33	0.33	Min T on sheathing away from slab, between studs at girts
T_{i2}	0.74	0.74	0.74	0.74	0.74	0.74	Max T on sheathing away from slab, between girts at studs
T_{i3}	0.83	0.79	0.84	0.79	0.85	0.80	Min T on beam exposed to interior air, top flange at I-beam intersection

Detail 5.7.13

Exterior and Interior Insulated 3 5/8" x 1 5/8" Steel Stud (16" o.c.) Wall Assembly with Horizontal Z-girts (24" o.c.) Supporting Metal Cladding – Structural Steel Floor Intersection with Isokorb KST System Thermally Broken Beam

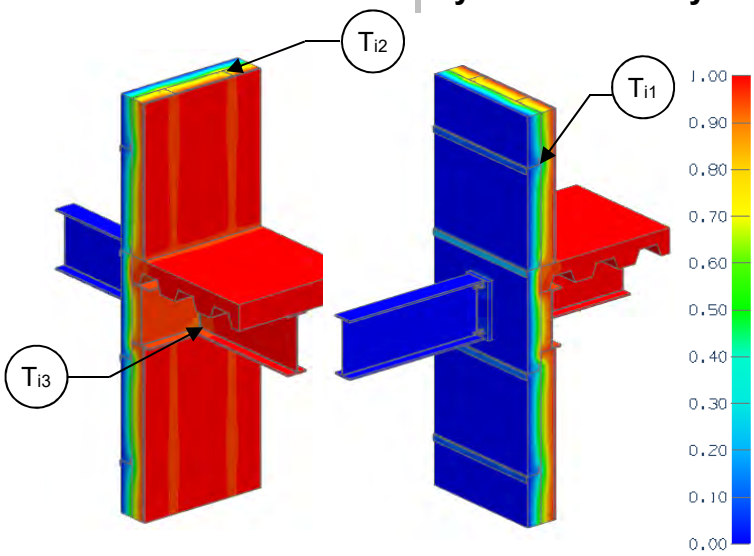

View from Interior **View from Exterior**

Thermal Performance Indicators

Assembly 1D (Nominal) R-Value	R_{1D}	R-14.3 (2.52 RSI) + exterior insulation
Transmittance / Resistance without Anomaly	U_o, R_o	"clear wall" U- and R-value without slab or beam
Transmittance / Resistance	U_s, R_s, U_t, R_t	U and R-values for s = steel stud wall + slab t = combined wall + slab + beam
Surface Temperature Index[1]	T_i	0 = exterior temperature 1 = interior temperature
Linear Transmittance	ψ	Incremental increase in transmittance per linear length of floor slab
Point Transmittance	χ	Incremental increase in transmittance for beam penetration

[1]Assumptions and limitations for surface temperatures identified in ASHRAE 1365-RP

Nominal (1D) vs. Assembly Performance Indicators

Base Assembly – Wall

Wall Exterior Insulation 1D R-Value (RSI)	R_{w1D} ft²·hr·°F / Btu (m² K / W)	R_o ft²·hr·°F / Btu (m² K / W)	U_o Btu/ft² ·hr ·°F (W/m² K)
R-15 (2.64)	R-29.3 (5.16)	R-18.6 (3.28)	0.054 (0.31)

Slab Transmittance

R_s ft²·hr·°F / Btu (m² K / W)	U_s Btu/ft² ·hr ·°F (W/m² K)	ψ Btu/ft hr °F (W/m K)
R-15.6 (2.74)	0.064 (0.36)	0.084 (0.146)

Beam Point Transmittance

Wall Exterior Insulation 1D R-Value (RSI)	R_t ft²·hr·°F / Btu (m² K / W)	U_t Btu/ft² ·hr ·°F (W/m² K)	χ Btu/hr °F (W/K)
R-15 (2.64)	R-11.6 (2.05)	0.086 (0.49)	0.457 (0.243)

Temperature Indices

T_{i1}	0.33	Min T on sheathing away from slab, between studs at girts
T_{i2}	0.78	Max T on sheathing away from slab, between girts at studs
T_{i3}	0.83	Min T on beam exposed to interior air, bottom flange at I-beam intersection

Detail 5.8.1

Exterior and Interior Insulated 3 5/8″ x 1 5/8″ Steel Stud (16″ o.c) Wall Assembly with Horizontal Z-Girts (24″ o.c.) Supporting Metal Cladding – Interior Wall Intersection

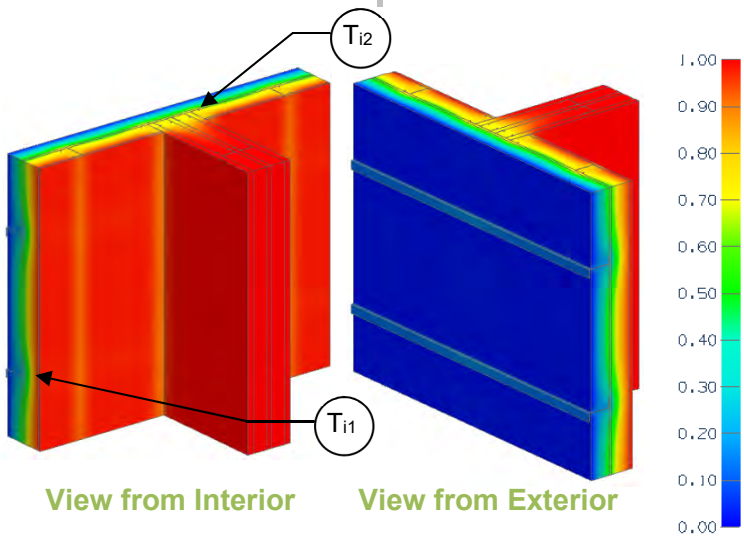

Thermal Performance Indicators

Assembly 1D (Nominal) R-Value	R_{1D}	R-14.2 (2.5 RSI) + exterior insulation
Transmittance / Resistance without Anomaly	U_o, R_o	"clear wall" U- and R-value, without interior wall
Transmittance / Resistance	U, R	U and R-values for the overall assembly
Surface Temperature Index[1]	T_i	0 = exterior temperature 1 = interior temperature
Linear Transmittance	ψ	Incremental increase in transmittance per linear length of inner wall

[1]Assumptions and limitations for surface temperatures identified in ASHRAE 1365-RP

Nominal (1D) vs. Assembly Performance Indicators

Exterior Insulation 1D R-Value (RSI)	R_{1D} ft²·hr·°F / Btu (m² K / W)	R_o ft²·hr·°F / Btu (m² K / W)	U_o Btu/ft² ·hr ·°F (W/m² K)	R ft²·hr·°F / Btu (m² K / W)	U Btu/ft² ·hr ·°F (W/m² K)	ψ Btu/ft hr °F (W/m K)
R-5 (0.88)	R-19.2 (3.38)	R-13.4 (2.36)	0.075 (0.42)	R-12.6 (2.22)	0.079 (0.45)	0.023 (0.039)
R-10 (1.76)	R-24.2 (4.26)	R-16.3 (2.87)	0.061 (0.35)	R-15.6 (2.74)	0.064 (0.37)	0.014 (0.024)
R-15 (2.64)	R-29.2 (5.14)	R-18.5 (3.25)	0.054 (0.31)	R-17.8 (3.14)	0.056 (0.32)	0.010 (0.017)
R-20 (3.52)	R-34.2 (6.02)	R-20.5 (3.61)	0.049 (0.28)	R-19.8 (3.49)	0.050 (0.29)	0.008 (0.014)
R-25 (4.40)	R-39.2 (6.90)	R-22.1 (3.90)	0.045 (0.26)	R-21.4 (3.77)	0.047 (0.27)	0.007 (0.013)

Temperature Indices

	R5	R10	R15	R20	R25	
T_{i1}	0.27	0.29	0.33	0.37	0.39	Min T on sheathing, along girt between studs, away from interior wall intersection
T_{i2}	0.55	0.68	0.73	0.76	0.78	Max T on sheathing, at studs, between z girts, at the acoustic wall intersection

Detail 5.8.2

Exterior Insulated 6″ x 1 5/8″ Steel Stud (16″ o.c.) Wall Assembly with FRP Vertical Brackets and Rail System Supporting Metal Cladding – At-Grade Foundation Wall Intersection

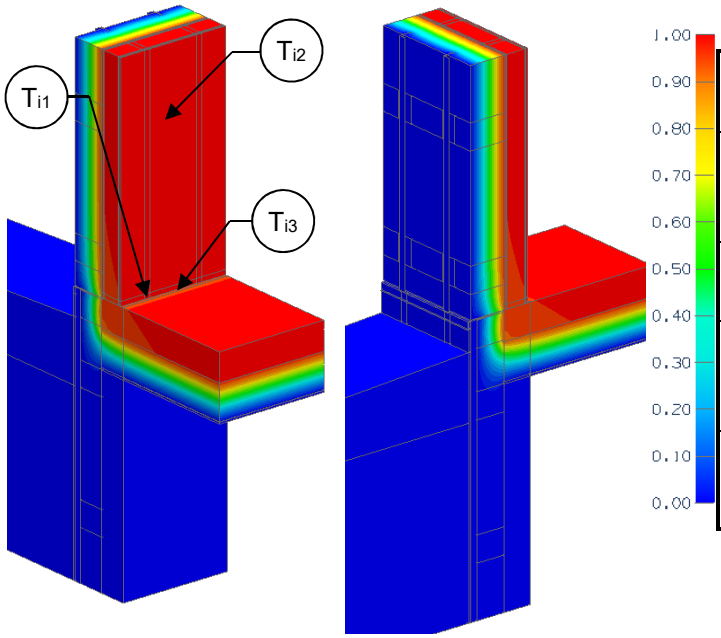

View from Interior View from Exterior

Thermal Performance Indicators

Assembly 1D (Nominal) R-Value	R_{1D}	R-3.2 (0.56 RSI) + exterior insulation for wall
Transmittance / Resistance without Anomaly	U_o, R_o	"clear wall" U- and R-value without slab and shelf angle
Transmittance / Resistance	U, R	U- and R-values for overall assembly
Surface Temperature Index[1]	T_i	0 = exterior temperature 1 = interior temperature
Linear Transmittance	ψ	Incremental increase in transmittance per linear length of foundation

[1]Assumptions and limitations for surface temperatures identified in ASHRAE 1365-RP

Scenario

Scenario	
A	Without Thermal Break
B	With Thermal Break

Nominal (1D) vs. Assembly Performance Indicators

Base Assembly – Wall

Exterior Insulation 1D R-Value (RSI)	R_{1D} ft²·hr·°F / Btu (m² K / W)	R_o ft²·hr·°F / Btu (m² K / W)	U_o Btu/ft² ·hr ·°F (W/m² K)
R-42.0 (7.40)	R-45.2 (7.96)	R-40.0 (7.04)	0.025 (0.14)

Foundation Linear Transmittance

Scenario	Exterior Insulation 1D R-Value (RSI)	R ft²·hr·°F / Btu (m² K / W)	U Btu/ft² ·hr ·°F (W/m² K)	ψ Btu/ft ·hr·°F (W/m K)
A	R-42.0 (7.40)	R-6.5 (1.15)	0.154 (0.87)	0.292 (0.506)
B	R-42.0 (7.40)	R-12.3 (2.17)	0.081 (0.46)	0.059 (0.102)

Temperature Indices

	A	B	
T_{i1}	0.74	0.91	Min T on interior sheathing surface at slab intersection, at studs
T_{i2}	0.95	0.95	Min T on interior sheathing surface away from slab, between studs at clips
T_{i3}	0.80	0.94	Min T on floor, at drywall intersection

Detail 5.8.3

Exterior and Interior Insulated 6″ x 1 5/8″ Steel Stud (16″ o.c.) Wall Assembly with FRP Vertical Brackets and Rail System Supporting Metal Cladding and R19 Batt Insulation in Stud Cavity – At-Grade Foundation Wall Intersection

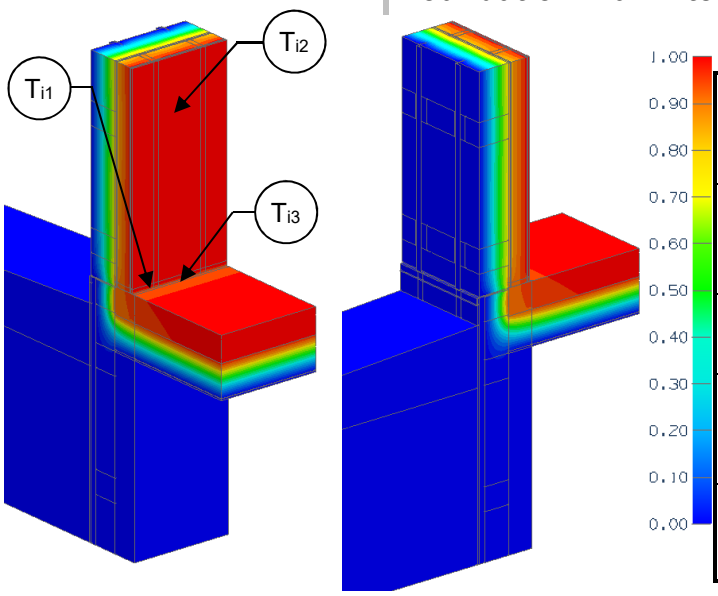

View from Interior View from Exterior

Thermal Performance Indicators

Assembly 1D (Nominal) R-Value	R_{1D}	R-21.3 (3.75 RSI) + exterior insulation
Transmittance / Resistance without Anomaly	U_o, R_o	"clear wall" U- and R-value without slab and shelf angle
Transmittance / Resistance	U, R	U- and R-values for overall assembly
Surface Temperature Index[1]	T_i	0 = exterior temperature 1 = interior temperature
Linear Transmittance	ψ	Incremental increase in transmittance per linear length of foundation

[1]Assumptions and limitations for surface temperatures identified in ASHRAE 1365-RP

Scenario

Scenario	
A	Without Thermal Break
B	With Thermal Break

Nominal (1D) vs. Assembly Performance Indicators

Base Assembly – Wall

Exterior Insulation 1D R-Value (RSI)	R_{1D} ft²·hr·°F / Btu (m² K / W)	R_o ft²·hr·°F / Btu (m² K / W)	U_o Btu/ft² ·hr ·°F (W/m² K)
R-42.0 (7.40)	R-63.3 (11.15)	R-48.3 (8.51)	0.021 (0.12)

Foundation Linear Transmittance

Scenario	Exterior Insulation 1D R-Value (RSI)	R ft²·hr·°F / Btu (m² K / W)	U Btu/ft² ·hr ·°F (W/m² K)	ψ Btu/ft ·hr·°F (W/m K)
A	R-42.0 (7.40)	R-7.2 (1.26)	0.140 (0.79)	0.271 (0.468)
B	R-42.0 (7.40)	R-13.6 (2.39)	0.074 (0.42)	0.058 (0.101)

Temperature Indices

	A	B	
T_{i1}	0.65	0.88	Min T on interior sheathing surface at slab intersection, at studs
T_{i2}	0.75	0.75	Min T on interior sheathing surface away from slab, between studs at clips
T_{i3}	0.75	0.92	Min T on floor, at drywall intersection

6.0 Metal Buildings

Detail 6.1.1 ..... **B.6.1**

Vertical Insulated Metal Panel – Clear Wall with Vertical Connection Joint and Support Girt/Hat Track Backup Wall

Detail 6.1.2 ..... **B.6.2**

Vertical Insulated Metal Panel - Metal Stack Joint and Support Girt Back/Hat Track Backup Wall

Detail 6.1.3 ..... **B.6.3**

Horizontal Insulated Metal Panel – Clear Wall with Horizontal Connection Joint and Steel Stud Backup Wall

Detail 6.1.4 ..... **B.6.4**

Horizontal Insulated Metal Panel – Vertical Gasket Joint with Steel Stud Backup Wall

Detail 6.1.5 ..... **B.6.5**

Structural Sheet Steel Wall with Cladding Supported by Notched Z-Bar – Clear Wall

Detail 6.1.6 ..... **B.6.6**

Structural Sheet Steel Wall with Cladding Supported by Intermittent Notched Z-Bar – Clear Wall

Detail 6.1.7 ..... **B.6.7**

Structural Sheet Steel Wall with Cladding Supported by Thermal Chairs – Clear Wall

Detail 6.1.8 ..... **B.6.8**

2 Hour Fire Rated Structural Steel Sheet Wall with Cladding Supported by Notched Z-bar with Ceramic Blanket – Clear Wall

Detail 6.2.1 ..... **B.6.9**

Vertical Insulated Metal Panel Corrugated Slab Intersection with I-beam – Open Web Steel Joist and Support Girt/Hat Track Backup Wall

Detail 6.2.2 ..... **B.6.10**

Horizontal Insulated Metal Panel Corrugated Slab Intersection with I-beam – Open Web Steel Joist and Steel Stud Backup Wall

Detail 6.3.1 ..... **B.6.11**

Vertical Insulated Metal Panel – Window Glazing Transition with Steel Support Framing

Detail 6.3.2 ..... **B.6.12**

Horizontal Insulated Metal Panel – Window Glazing Transition with Steel Support Framing

Detail 6.4.1 ..... **B.6.13**

Vertical Insulated Metal Panel - Steel Roof Deck with Open Web Steel Joist & Parapet Intersection

Detail 6.4.2 ..... **B.6.14**

Horizontal Insulated Metal Panel - Steel Roof Deck with Open Web Steel Joist & Parapet Intersection

Detail 6.5.1 ..... **B.6.15**

Vertical Insulated Metal Panel - Corner Intersection with Post and Support Girt/Hat Track Backup Wall

Detail 6.5.2 ..... **B.6.16**

Horizontal Insulated Metal Panel – Corner Intersection with Post and Steel Stud Backup Wall

Detail 6.1.1

Vertical Insulated Metal Panel – Clear Wall with Vertical Connection Joint and Support Girt/Hat Track Backup Wall

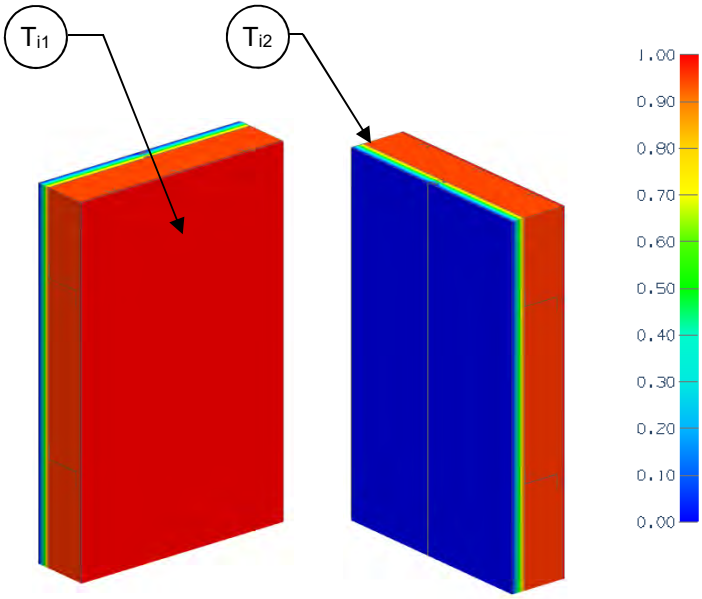

View from Interior View from Exterior

Thermal Performance Indicators

Assembly 1D (Nominal) R-Value	R_{1D}	Nominal thermal resistance value of panel and backup wall
Transmittance / Resistance without anomalies	U_o, R_o	"clear wall" U and R-value
Surface Temperature Index[1]	T_i	0 = exterior temperature 1 = interior temperature
Linear Transmittance	ψ	Incremental increase in transmittance per length of connection joint

[1]Assumptions and limitations for surface temperatures identified in ASHRAE 1365-RP

[2]The linear transmittance of the panel joint can be used with the R_{1D} value to find the clear filed values for any size of panel

Nominal (1D) vs. Assembly Performance Indicators

Insulated Panel 1D R-Value (RSI)	R_{1D} ft²·hr·°F / Btu (m² K / W)	R_o ft²·hr·°F / Btu (m² K / W)	U_o Btu/ft² ·hr ·°F (W/m² K)	ψ^2 Btu/ft ·hr ·°F (W/m K)
R-21.0 (3.70)	R-23.2 (4.09)	R-21.4 (3.80)	0.047 (0.27)	0.013 (0.023)

Temperature Indices

T_{i1}	0.88	Min T on interior panel face, at panel joint and bolts
T_{i2}	0.91	Max T on interior panel face, between joints

Detail 6.1.2

Vertical Insulated Metal Panel - Metal Stack Joint and Support Girt Back/Hat Track Backup Wall

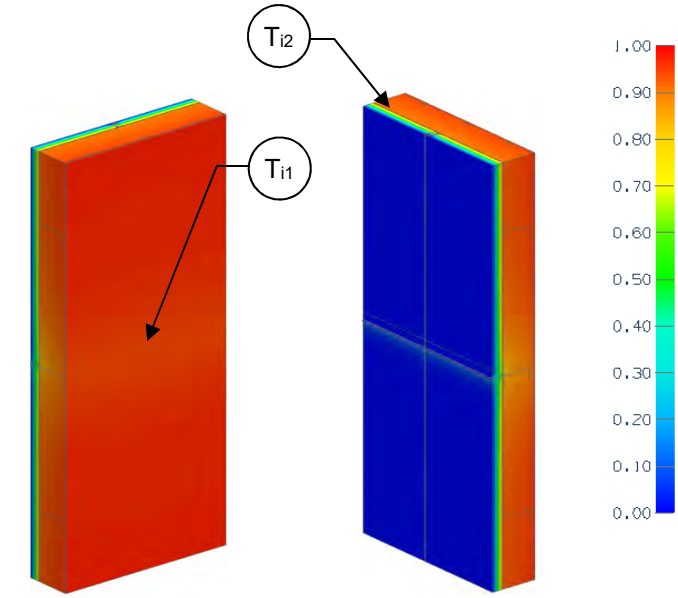

View from Interior View from Exterior

Thermal Performance Indicators

Assembly 1D (Nominal) R-Value	R_{1D}	Nominal thermal resistance value of panel and backup wall
Transmittance / Resistance without anomalies	U_o, R_o	"clear wall" U and R-value
Transmittance / Resistance	U, R	U- and R-values for overall assembly
Surface Temperature Index[1]	T_i	0 = exterior temperature 1 = interior temperature
Linear Transmittance	ψ	Incremental increase in transmittance per length of stack joint

[1]Assumptions and limitations for surface temperatures identified in ASHRAE 1365-RP
[2]The linear transmittance of the panel joint can be used with the R_{1D} value to find the clear filed values for any size of panel

Nominal (1D) vs. Assembly Performance Indicators

Insulated Panel 1D R-Value (RSI)	R_{1D} ft²·hr·°F / Btu (m² K / W)	R_o ft²·hr·°F / Btu (m² K / W)	U_o Btu/ft² ·hr ·°F (W/m² K)	R ft²·hr·°F / Btu (m² K / W)	U Btu/ft² ·hr ·°F (W/m² K)	ψ^2 Btu/ft ·hr ·°F (W/m K)
R-21.0 (3.70)	R-23.2 (4.09)	R-21.4 (3.80)	0.047 (0.27)	R-15.8 (2.78)	0.063 (0.36)	0.154 (0.266)

Temperature Indices

T_{i1}	0.73	Min T on interior panel face, at bolts and stack joint
T_{i2}	0.91	Max T on interior panel face, between stack joint and panel joints

Detail 6.1.3

Horizontal Insulated Metal Panel – Clear Wall with Horizontal Connection Joint and Steel Stud Backup Wall

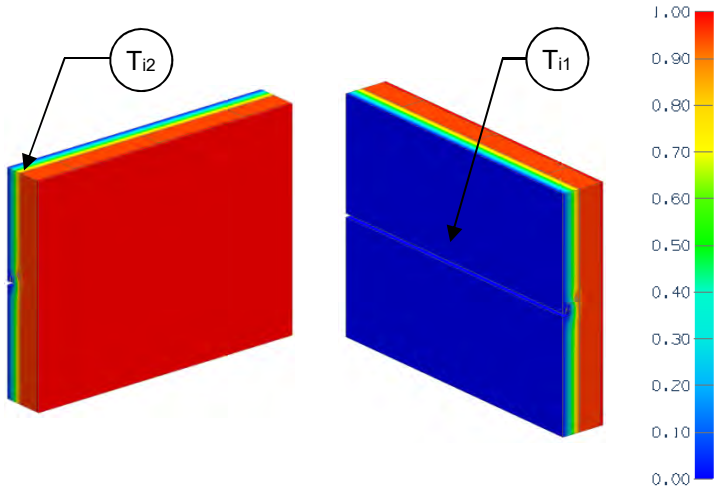

View from Interior View from Exterior

Thermal Performance Indicators

Assembly 1D (Nominal) R-Value	R_{1D}	Nominal thermal resistance value of panel and backup wall
Transmittance / Resistance without anomalies	U_o, R_o	"clear wall" U and R-value
Surface Temperature Index[1]	T_i	0 = exterior temperature 1 = interior temperature
Linear Transmittance	ψ	Incremental increase in transmittance per length of connection joint

[1]Assumptions and limitations for surface temperatures identified in ASHRAE 1365-RP

Nominal (1D) vs. Assembly Performance Indicators

Insulated Panel 1D R-Value (RSI)	R_{1D} ft²·hr·°F / Btu (m² K / W)	R_o ft²·hr·°F / Btu (m² K / W)	U_o Btu/ft² ·hr ·°F (W/m² K)	ψ Btu/ft ·hr ·°F (W/m K)
R-21.0 (3.70)	R-23.2 (4.09)	R-19.5 (3.43)	0.052 (0.29)	0.025 (0.042)

Temperature Indices

T_{i1}	0.89	Min T on interior panel face, at panel joint and bolts
T_{i2}	0.91	Max T on interior panel face, between joints

Detail 6.1.4

Horizontal Insulated Metal Panel – Vertical Gasket Joint with Steel Stud Backup Wall

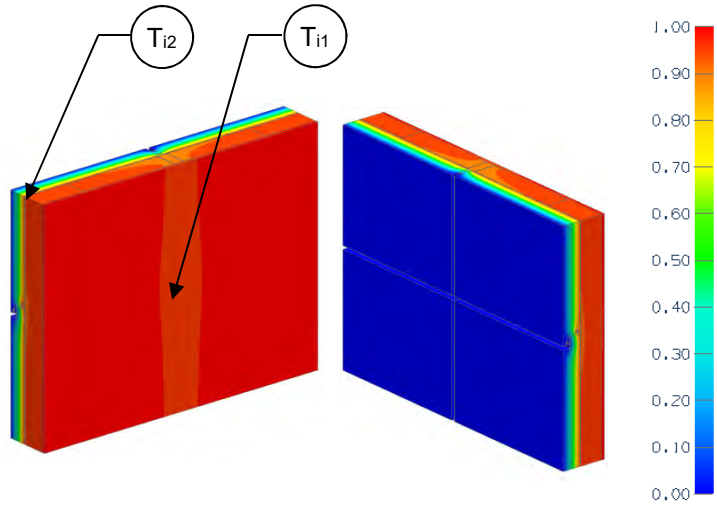

View from Interior View from Exterior

Thermal Performance Indicators

Assembly 1D (Nominal) R-Value	R_{1D}	Nominal thermal resistance value of panel and backup wall
Transmittance / Resistance without anomalies	U_o, R_o	"clear wall" U and R-value
Transmittance / Resistance	U, R	U- and R-values for overall assembly
Surface Temperature Index[1]	T_i	0 = exterior temperature 1 = interior temperature
Linear Transmittance	ψ	Incremental increase in transmittance per length of gasket joint

[1]Assumptions and limitations for surface temperatures identified in ASHRAE 1365-RP

Nominal (1D) vs. Assembly Performance Indicators

Insulated Panel 1D R-Value (RSI)	R_{1D} ft²·hr·°F / Btu (m² K / W)	R_o ft²·hr·°F / Btu (m² K / W)	U_o Btu/ft² ·hr ·°F (W/m² K)	R ft²·hr·°F / Btu (m² K / W)	U Btu/ft² ·hr ·°F (W/m² K)	ψ Btu/ft ·hr ·°F (W/m K)
R-21.0 (3.70)	R-23.2 (4.09)	R-19.5 (3.43)	0.052 (0.29)	R-16.9 (2.97)	0.059 (0.34)	0.032 (0.055)

Temperature Indices

T_{i1}	0.85	Min T on interior panel face, at bolts, at horizontal and vertical joint intersection
T_{i2}	0.91	Max T on interior panel face, between joints

Detail 6.1.5

Structural Sheet Steel Wall with Cladding Supported by Notched Z-Bar – Clear Wall

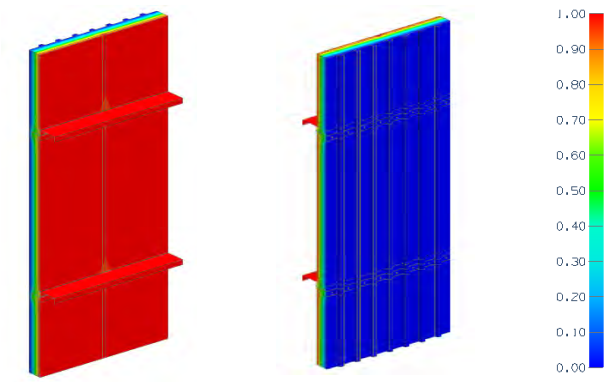

View from Interior View from Exterior

Thermal Performance Indicators

Assembly 1D (Nominal) R-Value	R_{1D}	R-0.9 (0.15 RSI) + exterior insulation
Transmittance / Resistance	U_o, R_o	"Clear wall" U- and R-value

Nominal (1D) vs. Assembly Performance Indicators

Baseline System

Vertical Spacing of Z-bar	Exterior Insulation 1D R-Value (RSI)	R_{1D} ft²·hr·°F / Btu (m² K / W)	R_o ft²·hr·°F / Btu (m² K / W)	U_o Btu/ft² ·hr ·°F (W/m² K)
48	R-25 (4.44)	R-25.9 (4.59)	R-21.8 (3.84)	0.046 (0.260)
60	R-25 (4.44)	R-25.9 (4.59)	R-22.5 (3.96)	0.044 (0.253)
72	R-25 (4.44)	R-25.9 (4.59)	R-23.0 (4.05)	0.044 (0.247)

Sensitivity Analysis – Impact of Steel Liner and Notched Z-Bar Thickness for Vertical Spacing of Z-Bar at 60" o.c.

Steel Thickness	Exterior Insulation 1D R-Value (RSI)	R_{1D} ft²·hr·°F / Btu (m² K / W)	Liner		Z-Bar	
			R_o ft²·hr·°F / Btu (m² K / W)	U_o Btu/ft² ·hr ·°F (W/m² K)	R_o ft²·hr·°F / Btu (m² K / W)	U_o Btu/ft² ·hr ·°F (W/m² K)
24 Ga	R-25 (4.44)	R-25.9 (4.59)	R-22.5 (3.96)	0.044 (0.253)	R-22.9 (4.03)	0.045 (0.256)
18 Ga	R-25 (4.44)	R-25.9 (4.59)	R-22.4 (3.95)	0.045 (0.253)	R-22.5 (3.96)	0.044 (0.253)
12 Ga	R-25 (4.44)	R-25.9 (4.59)	-	-	R-22.2 (3.91)	0.044 (0.248)

Sensitivity Analysis – Impact of PVC Coating on Notched Z-Bar with Vertical Spacing of Z-Bar at 60" o.c

PVC Coating Thickness on Thermal Chairs and Outer Rails (mils)	Exterior Insulation 1D R-Value (RSI)	R_{1D} ft²·hr·°F / Btu (m² K / W)	R_o ft²·hr·°F / Btu (m² K / W)	U_o Btu/ft² ·hr ·°F (W/m² K)
0 Top, 0 Bottom	R-25 (4.44)	R-25.9 (4.59)	R-22.5 (3.96)	0.044 (0.253)
8 Top, 4 Bottom	R-25 (4.44)	R-25.9 (4.59)	R-22.7 (3.99)	0.044 (0.251)

Sensitivity Analysis – Impact of Thermal Tape at Notched Z-Bar with Vertical Spacing of Z-Bar at 60" o.c

Tape Thickness (in)	Tape R-Value (RSI)	Exterior Insulation 1D R-Value (RSI)	R_{1D} ft²·hr·°F / Btu (m² K / W)	R_o ft²·hr·°F / Btu (m² K / W)	U_o Btu/ft² ·hr ·°F (W/m² K)
0	R-0 (0.00)	R-25 (4.44)	R-25.9 (4.59)	R-21.4 (3.78)	0.047 (0.265)
1/8	R-1 (0.23)	R-25 (4.44)	R-25.9 (4.59)	R-22.5 (3.96)	0.044 (0.253)
1/4	R-3 (0.45)	R-25 (4.44)	R-25.9 (4.59)	R-22.8 (4.01)	0.044 (0.249)

Sensitivity Analysis – Impact of Insulation Type for Notched Z-Bar with Vertical Spacing of Z-Bar at 60" o.c

Insulation Thickness (in)	R-4.2/inch insulation			R-5/inch insulation			R-6/inch insulation		
	Exterior Insulation 1D R-Value (RSI)	R_o ft²·hr·°F / Btu (m² K / W)	U_o Btu/ft² ·hr ·°F (W/m² K)	Exterior Insulation 1D R-Value (RSI)	R_o ft²·hr·°F / Btu (m² K / W)	U_o Btu/ft² ·hr ·°F (W/m² K)	Exterior Insulation 1D R-Value (RSI)	R_o ft²·hr·°F / Btu (m² K / W)	U_o Btu/ft² ·hr ·°F (W/m² K)
6	R-25 (4.44)	R-22.5 (3.96)	0.044 (0.253)	R-30 (5.28)	R-26.0 (4.57)	0.039 (0.219)	R-36 (6.34)	R-30.1 (5.31)	0.033 (0.188)
7	R-29 (5.18)	R-25.7 (4.52)	0.039 (0.221)	R-35 (6.16)	R-29.6 (5.21)	0.034 (0.192)	R-42 (7.40)	R-34.2 (6.03)	0.029 (0.166)
8	R-34 (5.92)	R-28.4 (5.01)	0.035 (0.200)	R-40 (7.04)	R-32.7 (5.76)	0.031 (0.173)	R-48 (8.45)	R-37.8 (6.65)	0.026 (0.150)

Detail 6.1.6

Structural Sheet Steel Wall with Cladding Supported by Intermittent Notched Z-Bar – Clear Wall

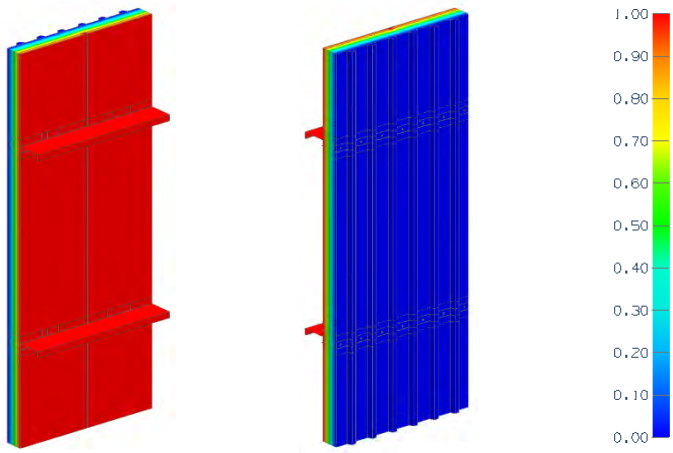

View from Interior View from Exterior

Thermal Performance Indicators

Assembly 1D (Nominal) R-Value	R_{1D}	R-0.9 (0.15 RSI) + exterior insulation
Transmittance / Resistance	U_o, R_o	"Clear wall" U- and R-value

Nominal (1D) vs. Assembly Performance Indicators

Vertical Spacing of Z-bar	Exterior Insulation 1D R-Value (RSI)	R_{1D} ft²·hr·°F / Btu (m² K / W)	R_o ft²·hr·°F / Btu (m² K / W)	U_o Btu/ft² ·hr ·°F (W/m² K)
Continuous z-bar with Thermal Block	R-25 (4.44)	R-25.9 (4.59)	R-22.5 (3.96)	0.044 (0.253)
Intermittent z-bar without Thermal Block	R-25 (4.44)	R-25.9 (4.59)	R-21.1 (3.72)	0.047 (0.269)

Detail 6.1.7

Structural Sheet Steel Wall with Cladding Supported by Thermal Chairs – Clear Wall

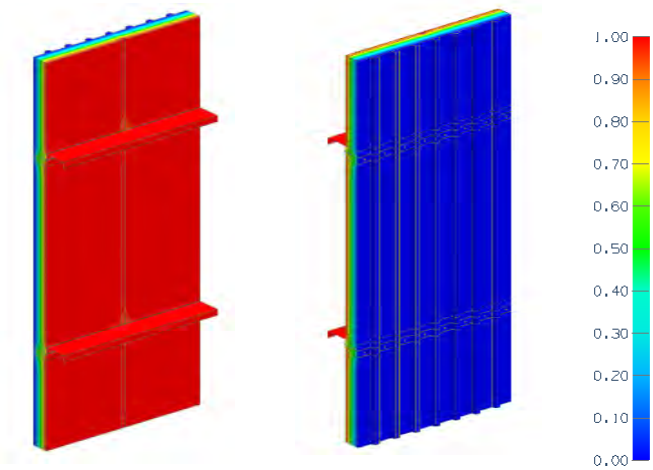

View from Interior View from Exterior

Thermal Performance Indicators

Assembly 1D (Nominal) R-Value	R_{1D}	R-0.9 (0.15 RSI) + exterior insulation
Transmittance / Resistance	U_o, R_o	"Clear wall" U- and R-value

Nominal (1D) vs. Assembly Performance Indicators

Baseline System

Vertical Spacing of Z-Bar (in)	Horizontal Thermal Chair Spacing (in)	Exterior Insulation 1D R-Value (RSI)	R_{1D} ft²·hr·°F / Btu (m² K / W)	R_o ft²·hr·°F / Btu (m² K / W)	U_o Btu/ft² ·hr ·°F (W/m² K)
60	24	R-25 (4.44)	R-25.9 (4.59)	R-24.3 (4.28)	0.041 (0.233)
60	36	R-25 (4.44)	R-25.9 (4.59)	R-24.4 (4.30)	0.041 (0.233)
60	48	R-25 (4.44)	R-25.9 (4.59)	R-24.8 (4.36)	0.040 (0.229)

Sensitivity Analysis – Impact of Steel Chair and Notched U-Channel Thickness for Horizontal Spacing at 24" o.c. and Vertical Spacing of Thermal Chair at 60" o.c.

Steel Thickness	Exterior Insulation 1D R-Value (RSI)	Thermal Chair R_{1D} ft²·hr·°F / Btu (m² K / W)	Thermal Chair		U-Channel	
			R_o ft²·hr·°F / Btu (m² K / W)	U_o Btu/ft² ·hr ·°F (W/m² K)	R_o ft²·hr·°F / Btu (m² K / W)	U_o Btu/ft² ·hr ·°F (W/m² K)
24 Ga	R-25 (4.44)	R-25.9 (4.59)	R-24.4 (4.30)	0.041 (0.233)	R-24.3 (4.28)	0.041 (0.233)
18 Ga	R-25 (4.44)	R-25.9 (4.59)	R-24.3 (4.28)	0.041 (0.233)	R-22.5 (3.96)	0.041 (0.233)
14 Ga	R-25 (4.44)	R-25.9 (4.59)	R-24.2 (4.27)	0.041 (0.234)	R-22.2 (3.91)	0.041 (0.234)

Detail 6.1.8

2 Hour Fire Rated Structural Steel Sheet Wall with Cladding Supported by Notched Z-bar with Ceramic Blanket – Clear Wall

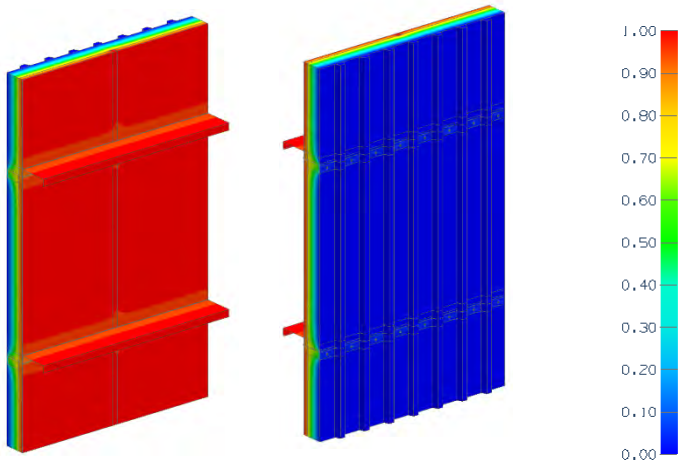

View from Interior View from Exterior

Thermal Performance Indicators

Assembly 1D (Nominal) R-Value	R_{1D}	R-0.9 (0.15 RSI) + exterior insulation
Transmittance / Resistance	U_o, R_o	"Clear wall" U- and R-value

Nominal (1D) vs. Assembly Performance Indicators

Vertical Spacing of Z-bar	Exterior Insulation 1D R-Value (RSI)	R_{1D} $ft^2 \cdot hr \cdot {}^oF$ / Btu (m^2 K / W)	R_o $ft^2 \cdot hr \cdot {}^oF$ / Btu (m^2 K / W)	U_o Btu/ft^2 ·hr ·^oF (W/m^2 K)
60	R-25 (4.44)	R-25.9 (4.59)	R-14.2 (2.51)	0.070 (0.400)

Detail 6.2.1

Vertical Insulated Metal Panel Corrugated Slab Intersection with I-beam – Open Web Steel Joist and Support Girt/Hat Track Backup Wall

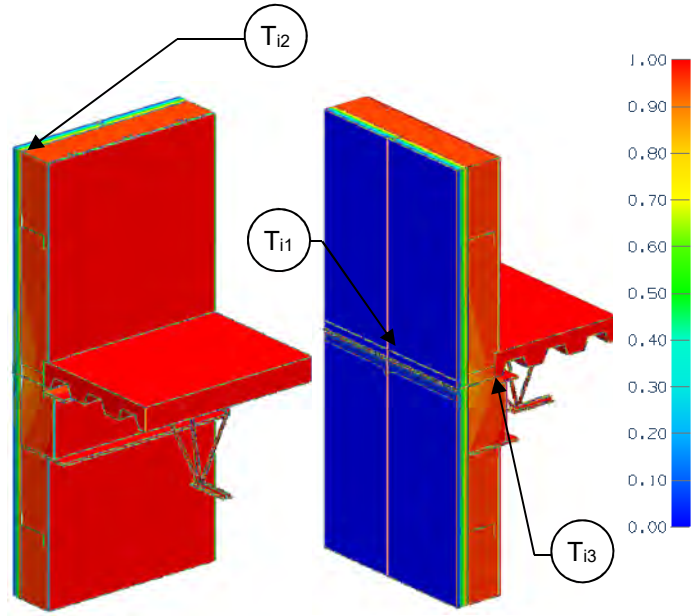

View from Interior **View from Exterior**

Thermal Performance Indicators

Assembly 1D (Nominal) R-Value	R_{1D}	Nominal thermal resistance value of panel and backup wall
Transmittance / Resistance without Anomaly	U_o, R_o	"clear field" U and R-value
Transmittance / Resistance	U, R	U- and R-values for overall assembly
Surface Temperature Index[1]	T_i	0 = exterior temperature 1 = interior temperature
Linear Transmittance	ψ	Incremental increase in transmittance per length of slab

[1]Assumptions and limitations for surface temperatures identified in ASHRAE 1365-RP

Nominal (1D) vs. Assembly Performance Indicators

Insulated Panel 1D R-Value (RSI)	R_{1D} ft²·hr·°F / Btu (m² K / W)	R_o ft²·hr·°F / Btu (m² K / W)	U_o Btu/ft² ·hr ·°F (W/m² K)	R ft²·hr·°F / Btu (m² K / W)	U Btu/ft² ·hr ·°F (W/m² K)	ψ Btu/ft ·hr ·°F (W/m K)
R-21.0 (3.70)	R-23.2 (4.09)	R-21.4 (3.80)	0.047 (0.27)	R-14.9 (2.63)	0.067 (0.38)	0.187 (0.323)

Temperature Indices

T_{i1}	0.73	Min T on interior panel face, at bolts and stack joint
T_{i2}	0.91	Max T on interior panel face, away from slab and joints
T_{i3}	0.90	Min T on interior surfaces, on corrugated slab ceiling

Detail 6.2.2

Horizontal Insulated Metal Panel Corrugated Slab Intersection with I-beam – Open Web Steel Joist and Steel Stud Backup Wall

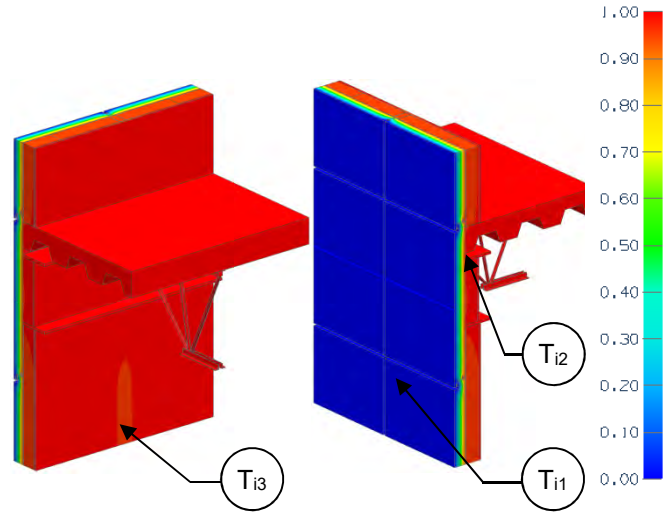

View from Interior View from Exterior

Thermal Performance Indicators

Assembly 1D (Nominal) R-Value	R_{1D}	Nominal thermal resistance value of panel and backup wall
Transmittance / Resistance without anomalies	U_o, R_o	"clear wall" U and R-value
Transmittance / Resistance	U, R	U- and R-values for overall assembly
Surface Temperature Index[1]	T_i	0 = exterior temperature 1 = interior temperature
Linear Transmittance	ψ	Incremental increase in transmittance per length of slab

[1]Assumptions and limitations for surface temperatures identified in ASHRAE 1365-RP

Nominal (1D) vs. Assembly Performance Indicators

Insulated Panel 1D R-Value (RSI)	R_{1D} ft²·hr·°F / Btu (m² K / W)	R_o ft²·hr·°F / Btu (m² K / W)	U_o Btu/ft² ·hr ·°F (W/m² K)	R ft²·hr·°F / Btu (m² K / W)	U Btu/ft² ·hr ·°F (W/m² K)	ψ Btu/ft ·hr ·°F (W/m K)
R-21.0 (3.70)	R-23.2 (4.09)	R-19.5 (3.43)	0.052 (0.29)	R-16.3 (2.87)	0.061 (0.35)	0.016 (0.027)

Temperature Indices

T_{i1}	0.87	Min T on interior panel face, at bolts and joint intersection, away from slab
T_{i2}	0.97	Max T on interior panel face, at I-Beam
T_{i3}	0.95	Min T on interior surfaces, at steel studs, away from I-Beam

Detail 6.3.1

Vertical Insulated Metal Panel – Window Glazing Transition with Steel Support Framing

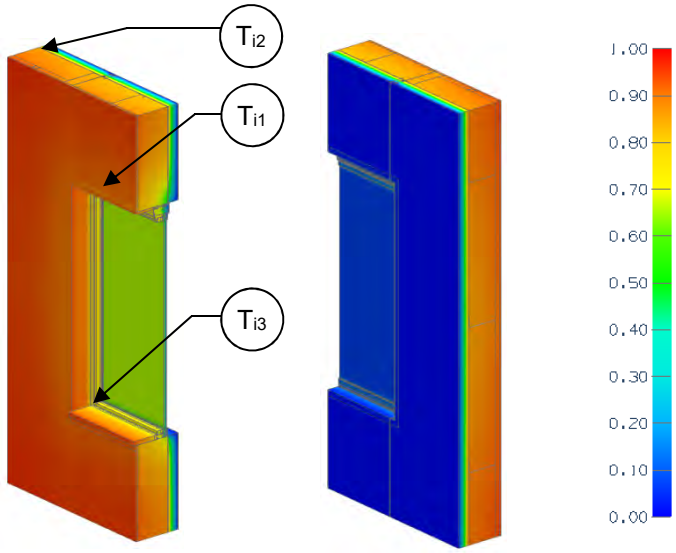

View from Interior View from Exterior

Thermal Performance Indicators

Assembly 1D (Nominal) R-Value	R_{1D}	Nominal thermal resistance value of wall
Transmittance / Resistance without Anomaly	U_o, R_o	"clear wall" U and R-value
Transmittance / Resistance	U, R	U- and R-values for overall assembly
Surface Temperature Index[1]	T_i	0 = exterior temperature 1 = interior temperature
Linear Transmittance	ψ	Incremental increase in transmittance per length of glazing transition

[1]Assumptions and limitations for surface temperatures identified in ASHRAE 1365-RP

Nominal (1D) vs. Assembly Performance Indicators

Base Assembly – Wall

Insulated Panel 1D R-Value (RSI)	R_{1D} ft²·hr·°F / Btu (m² K / W)	R_o ft²·hr·°F / Btu (m² K / W)	U_o Btu/ft² ·hr ·°F (W/m² K)
R-21.0 (3.70)	R-23.2 (4.09)	R-21.4 (3.80)	0.047 (0.27)

Window Transition Transmittance

R ft²·hr·°F / Btu (m² K / W)	U Btu/ft² ·hr ·°F (W/m² K)	ψ Btu/ft ·hr ·°F (W/m K)
R-7.1 (1.25)	0.414 (0.80)	0.292 (0.505)

Temperature Indices

T_{i1}	0.41	Min T on interior panel face, at top track
T_{i2}	0.91	Max T on interior panel face, away from window, between joints
T_{i3}	0.54	Min T on frame, at jamb and sill intersection

Detail 6.3.2

Horizontal Insulated Metal Panel – Window Glazing Transition with Steel Support Framing

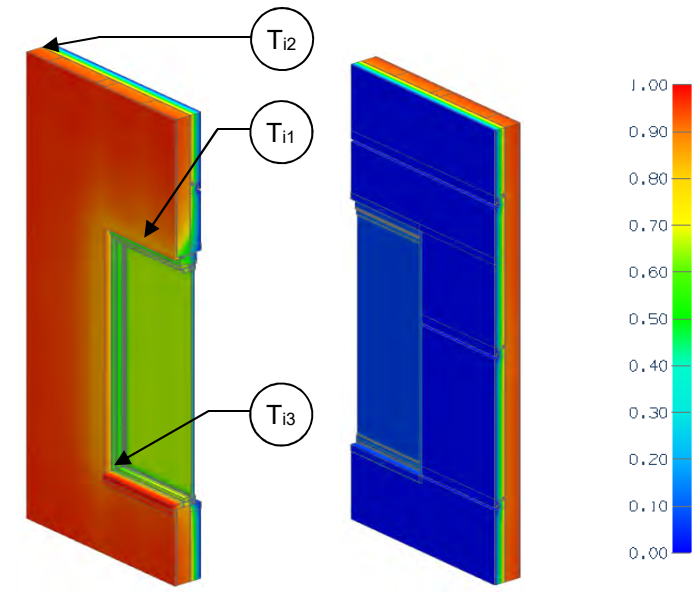

View from Interior **View from Exterior**

Thermal Performance Indicators

Assembly 1D (Nominal) R-Value	R_{1D}	Nominal thermal resistance value of wall
Transmittance / Resistance without Anomaly	U_o, R_o	"clear wall" U and R-value
Transmittance / Resistance	U, R	U- and R-values for overall assembly
Surface Temperature Index[1]	T_i	0 = exterior temperature 1 = interior temperature
Linear Transmittance	ψ	Incremental increase in transmittance per length of glazing transition

[1]Assumptions and limitations for surface temperatures identified in ASHRAE 1365-RP

Nominal (1D) vs. Assembly Performance Indicators

Base Assembly – Wall

Insulated Panel 1D R-Value (RSI)	R_{1D} ft²·hr·°F / Btu (m² K / W)	R_o ft²·hr·°F / Btu (m² K / W)	U_o Btu/ft² ·hr ·°F (W/m² K)
R-21.0 (3.70)	R-23.2 (4.09)	R-19.5 (3.43)	0.052 (0.29)

Window Transition Transmittance

R ft²·hr·°F / Btu (m² K / W)	U Btu/ft² ·hr ·°F (W/m² K)	ψ Btu/ft ·hr ·°F (W/m K)
R-7.5 (1.32)	0.133 (0.75)	0.263 (0.454)

Temperature Indices

T_{i1}	0.45	Min T on interior panel face, at top track
T_{i2}	0.91	Max T on interior panel face, away from window, between joints
T_{i3}	0.54	Min T on frame, at jamb and sill intersection

Detail 6.4.1

Vertical Insulated Metal Panel - Steel Roof Deck with Open Web Steel Joist & Parapet Intersection

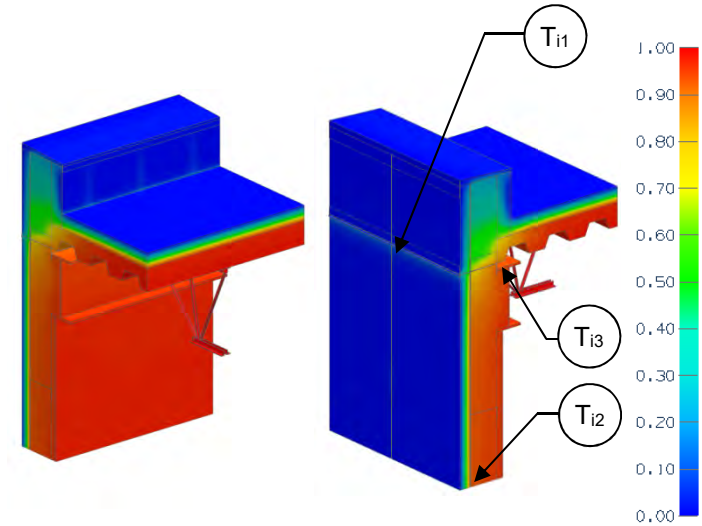

View from Interior View from Exterior

Thermal Performance Indicators

Assembly 1D (Nominal) R-Value	R_{1D}	R-2.2 (0.39 RSI) + exterior insulation
Transmittance / Resistance without anomalies	U_r, R_r, U_w, R_w	"clear field" U- and R-values for: r = insulated roof w = steel stud wall assembly with horizontal z girts
Transmittance / Resistance	U, R	U and R-values for the overall assembly
Surface Temperature Index[1]	T_i	0 = exterior temperature 1 = interior temperature
Linear Transmittance	ψ	Incremental increase in transmittance per length of parapet

[1]Assumptions and limitations for surface temperatures identified in ASHRAE 1365-RP

Nominal (1D) vs. Assembly Performance Indicators

Base Assembly – Wall

Insulated Panel 1D R-Value (RSI)	R_{1D} ft²·hr·°F / Btu (m² K / W)	R_w ft²·hr·°F / Btu (m² K / W)	U_w Btu/ft² ·hr ·°F (W/m² K)
R-21.0 (3.70)	R-23.2 (4.09)	R-21.4 (3.80)	0.047 (0.27)

Base Assembly - Roof

Roof Exterior Insulation 1D R-Value (RSI)	R_r ft²·hr·°F / Btu (m² K / W)	U_r Btu/ft² ·hr ·°F (W/m² K)
R-20 (3.52)	R-21.9 (3.86)	0.046 (0.26)

Parapet Transmittance

Insulated Panel 1D R-Value (RSI)	R ft²·hr·°F / Btu (m² K / W)	U Btu/ft² ·hr ·°F (W/m² K)	ψ Btu/ft ·hr ·°F (W/m K)
R-21.0 (3.70)	R-9.5 (1.68)	0.105 (0.60)	0.283 (0.489)

Temperature Indices

T_{i1}	0.71	Min T on interior panel face, at bolts, underneath support girt and semi-rigid insulation
T_{i2}	0.91	Max T on interior panel face, away from roof and joints
T_{i3}	0.84	Min T on interior surfaces, at roof and joist

Detail 6.4.2

Horizontal Insulated Metal Panel - Steel Roof Deck with Open Web Steel Joist & Parapet Intersection

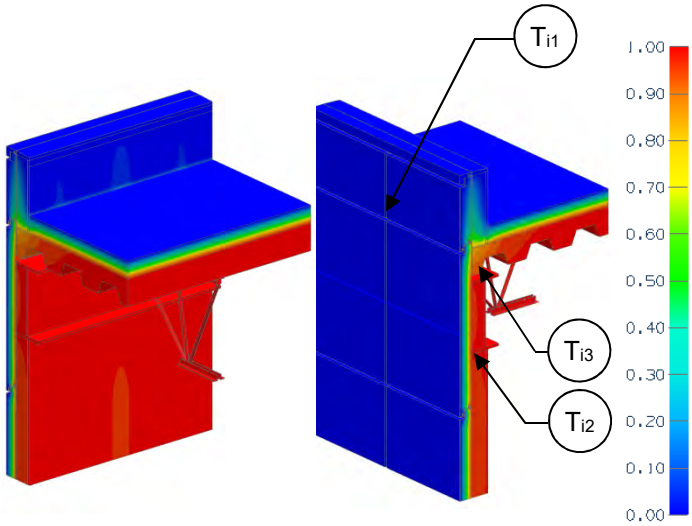

View from Interior View from Exterior

Thermal Performance Indicators

Assembly 1D (Nominal) R-Value	R_{1Dw}	R-2.2 (0.39 RSI) + exterior insulation
Transmittance / Resistance without Anomaly	U_r, R_r, U_w, R_w	"clear field" U- and R-values for: r = insulated roof w = steel stud wall assembly with horizontal z girts
Transmittance / Resistance	U, R	U and R-values for the overall assembly
Surface Temperature Index[1]	T_i	0 = exterior temperature 1 = interior temperature
Linear Transmittance	ψ	Incremental increase in transmittance per length of parapet

[1]Assumptions and limitations for surface temperatures identified in ASHRAE 1365-RP

Nominal (1D) vs. Assembly Performance Indicators

Base Assembly – Wall

Insulated Panel 1D R-Value (RSI)	R_{1D} ft²·hr·°F / Btu (m² K / W)	R_w ft²·hr·°F / Btu (m² K / W)	U_w Btu/ft² ·hr ·°F (W/m² K)
R-21.0 (3.70)	R-23.2 (4.09)	R-19.5 (3.43)	0.052 (0.29)

Base Assembly - Roof

Roof Exterior Insulation 1D R-Value (RSI)	R_r ft²·hr·°F / Btu (m² K / W)	U_r Btu/ft² ·hr ·°F (W/m² K)
R-20 (3.52)	R-21.9 (3.86)	0.046 (0.26)

Parapet Transmittance

Insulated Panel 1D R-Value (RSI)	R ft²·hr·°F / Btu (m² K / W)	U Btu/ft² ·hr ·°F (W/m² K)	ψ Btu/ft ·hr ·°F (W/m K)
R-21.0 (3.70)	R-11.6 (2.04)	0.087 (0.49)	0.237 (0.410)

Temperature Indices

T_{i1}	0.52	Min T on interior panel face, at bolts and slab
T_{i2}	0.95	Max T on interior panel face, at I-Beam
T_{i3}	0.87	Min T on interior surfaces, on corrugated roof, near wall

Detail 6.5.1

Vertical Insulated Metal Panel - Corner Intersection with Post and Support Girt/Hat Track Backup Wall

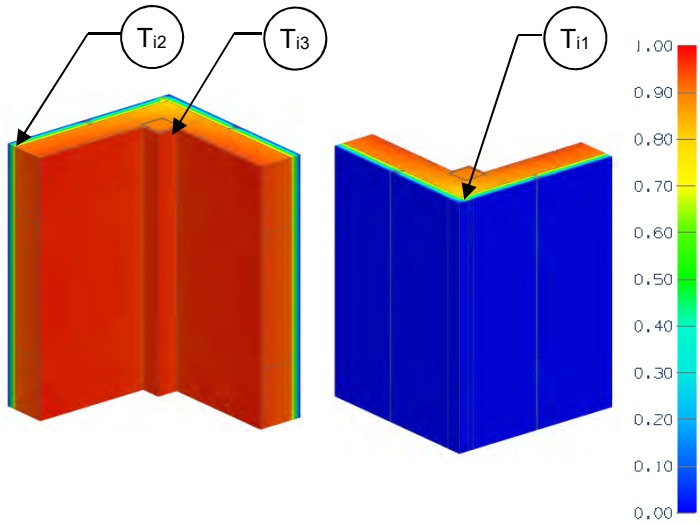

View from Interior View from Exterior

Thermal Performance Indicators

Assembly 1D (Nominal) R-Value	R_{1D}	R-2.2 (0.39 RSI) + exterior insulation
Transmittance / Resistance without Anomaly	U_o, R_o	"clear wall" U- and R-value, without corner
Transmittance / Resistance	U, R	U- and R-values for overall assembly
Surface Temperature Index[1]	T_i	0 = exterior temperature 1 = interior temperature
Linear Transmittance	ψ	Incremental increase in transmittance per length of corner

[1]Assumptions and limitations for surface temperatures identified in ASHRAE 1365-RP

Nominal (1D) vs. Assembly Performance Indicators

Insulated Panel 1D R-Value (RSI)	R_{1D} ft²·hr·°F / Btu (m² K / W)	R_o ft²·hr·°F / Btu (m² K / W)	U_o Btu/ft² ·hr ·°F (W/m² K)	R ft²·hr·°F / Btu (m² K / W)	U Btu/ft² ·hr ·°F (W/m² K)	ψ Btu/ft ·hr ·°F (W/m K)
R-21.0 (3.70)	R-23.2 (4.09)	R-21.4 (3.80)	0.047 (0.27)	R-16.3 (2.88)	0.061 (0.35)	0.090 (0.156)

Temperature Indices

T_{i1}	0.78	Min T on interior panel face, at corner, away from support girts
T_{i2}	0.91	Max T on interior panel face, at support girts. Away from corner
T_{i3}	0.93	Min T on interior surfaces, at interior drywall corner

Detail 6.5.2

Horizontal Insulated Metal Panel – Corner Intersection with Post and Steel Stud Backup Wall

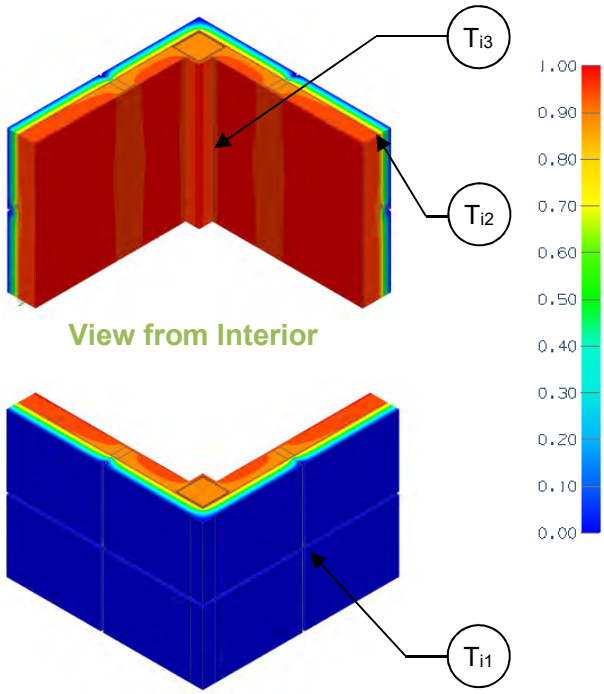

View from Interior

View from Exterior

Thermal Performance Indicators

Assembly 1D (Nominal) R-Value	R_{1D}	R-2.2 (0.39 RSI) + exterior insulation
Transmittance / Resistance without Anomaly	U_o, R_o	"clear field" U and R-value, without corner
Transmittance / Resistance	U, R	U- and R-values for overall assembly
Surface Temperature Index[1]	T_i	0 = exterior temperature 1 = interior temperature
Linear Transmittance	ψ	Incremental increase in transmittance per length of corner

[1]Assumptions and limitations for surface temperatures identified in ASHRAE 1365-RP

Nominal (1D) vs. Assembly Performance Indicators

Insulated Panel 1D R-Value (RSI)	R_{1D} ft²·hr·°F / Btu (m² K / W)	R_o ft²·hr·°F / Btu (m² K / W)	U_o Btu/ft² ·hr ·°F (W/m² K)	R ft²·hr·°F / Btu (m² K / W)	U Btu/ft² ·hr ·°F (W/m² K)	ψ Btu/ft ·hr ·°F (W/m K)
R-21.0 (3.70)	R-23.2 (4.09)	R-19.5 (3.43)	0.052 (0.29)	R-15.2 (2.68)	0.066 (0.37)	0.037 (0.064)

Temperature Indices

T_{i1}	0.85	Min T on interior panel face, at bolts, at joint intersection
T_{i2}	0.91	Max T on interior panel face, between joints away from corner
T_{i3}	0.92	Min T on interior surfaces, at inner drywall corner

7.0 Concrete Construction

Detail 7.1.1 ..... **B.7.1**

Exterior Insulated Concrete Drained EIFS Wall Assembly - Clear Wall

Detail 7.1.3 ..... **B.7.2**

Exterior Insulated Concrete Block Wall with Thermally Broken ISO Clip System with Horizontal Sub-Girt Supporting Cladding – Clear Wall

Detail 7.1.4 ..... **B.7.3**

Exterior Insulated Concrete Assembly with Nvelope – NV1 Clip System Supporting Cladding – Clear Wall

Detail 7.1.5 ..... **B.7.4**

Exterior Insulated Concrete Block Wall Assembly with Nvelope – NV1 Clip System Supporting Cladding – Clear Wall

Detail 7.1.6 ..... **B.7.5**

Exterior Insulated Concrete Mass Wall Assembly with Hohmann & Barnard Masonry Zinc 2-Seal Anchor Supporting Brick Veneer – Clear Wall

Detail 7.1.7 ..... **B.7.6**

Exterior Insulated Concrete Mass Wall Assembly with Hohmann & Barnard Masonry Stainless Steel 2-Seal Thermal Wing Nut Anchor Supporting Brick Veneer – Clear Wall

Detail 7.1.8 ..... **B.7.7**

Precast Sandwich Panel Wall Assembly with Concrete Panel Joints – Clear Wall

Detail 7.1.9 ..... **B.7.8**

Precast Sandwich Panel Wall Assembly with Tigerloc Thermally Broken Panel Joints – Clear Wall

Detail 7.1.10 ..... **B.7.9**

Precast Concrete Sandwich Panel Wall Assembly with FRP Connectors – Clear Wall Detail

Detail 7.1.11 ..... **B.7.10**

Exterior Insulated Concrete Block Wall with Armadillo FRR Horizontal Z-Girts Supporting Cladding – Clear Wall

Detail 7.1.12 ..... **B.7.11**

Exterior Insulated Concrete Block Wall with Vertical Clips Supporting Cladding – Clear Wall

Detail 7.1.13 ..... **B.7.12**

Exterior Insulated Concrete Block Wall Assembly with Brick Ties Supporting Brick Veneer – Clear Wall

Detail 7.1.14 ..... **B.7.13**

Interior Insulated Concrete Mass Wall with 1 5/8” Steel Stud (16” o.c.) Supporting Interior Finish Wall Assembly – Clear Wall

Detail 7.1.15 ..... **B.7.14**

Precast Sandwich Panel Wall Assembly with Steel Connectors and 3 5/8” x 1 5/8” Steel Stud (16” o.c.) – Clear Wall

Detail 7.2.1 ..... B.7.15

Exterior Insulated Concrete Drained EIFS Wall Assembly – Intermediate Floor Intersection

Detail 7.2.2 ..... B.7.16

Interior Insulated Concrete Mass Wall with 1 5/8″ Steel Stud (16″ o.c.) Supporting Interior Finish – Non-Insulated Interior Wall and Non-insulated Intermediate Floor Intersection

Detail 7.2.3 ..... B.7.17

Interior Insulated Concrete Mass Wall with 1 5/8″ Steel Stud (16″ o.c.) Supporting Interior Finish – Insulated Interior Wall and Non-insulated Intermediate Floor Intersection

Detail 7.2.4 ..... B.7.18

Interior Insulated Concrete Mass Wall with 3 5/8” x 1 5/8” Steel Studs (16” o.c.) Supporting Interior Finish – Interior Insulated Wall and Non-Insulated Partition Wall Intersection

Detail 7.2.5 ..... B.7.19

Interior Insulated Concrete Mass Wall with 1 5/8” x 1 5/8” Steel Studs (16” o.c.) Supporting Interior Finish – Continuous Concrete Intermediate Floor Intersection

Detail 7.2.6 ..... B.7.20

Precast Wall Assembly with 3 5/8″ x 1 5/8″ Steel Stud (16″ o.c) and Insulation in Stud Cavity – Intermediate Floor Intersection

Detail 7.2.7 ..... B.7.21

Precast Wall Assembly with 3 5/8″ x 1 5/8″ Steel Stud (16″ o.c) and Rigid Insulation Outboard of Studs – Intermediate Floor Intersection

Detail 7.2.8 ..... B.7.22

Precast Sandwich Panel Wall Assembly with 3 5/8″ x 1 5/8″ Steel Stud (16″ o.c.) – Intermediate Floor Intersection

Detail 7.2.9 ..... B.7.23

Precast Sandwich Panel Wall Assembly with Concrete at Panel Perimeter and Steel Connectors at 24” o.c. – Intermediate Floor Intersection

Detail 7.2.10 ..... B.7.24

Precast Sandwich Panel Wall Assembly with Steel Connectors at 16” o.c. – Intermediate Floor Intersection

Detail 7.2.11 ..... B.7.25

Precast Sandwich Panel Wall Assembly with Steel Connectors at 36” o.c. – Intermediate Floor Intersection

Detail 7.2.12 ..... B.7.26

Precast Sandwich Panel Wall Assembly with Steel Connectors at 48” o.c. – Intermediate Floor Intersection

Detail 7.2.13 ..... B.7.27

Precast Sandwich Panel Wall Assembly with Fiber-Reinforced Composite Connectors at 16” o.c. – Intermediate Floor Intersection

Detail 7.2.14 ..... B.7.28

Exterior Insulated Concrete Block Wall Assembly with Shelf Angle & Brick Ties Supporting Brick Veneer – Intermediate Floor Intersection

Detail 7.2.15 ..... B.7.29

Exterior Insulated Concrete Block Wall Assembly with Stand-Off Shelf Angle & Brick Ties Supporting Brick Veneer – Intermediate Floor Intersection

Detail 7.2.16 ..... B.7.30

Exterior Insulated Concrete Block Wall Assembly with Masonry Ties Supporting Brick Veneer – Intermediate Floor Intersection at Balcony

Detail 7.2.17 ..... B.7.31

Exterior Insulated Concrete Block Wall Assembly with Masonry Ties Supporting Brick Veneer – Angle Supported Slab & Intermediate Floor Intersection

Detail 7.2.18 ..... B.7.32

Exterior Insulated Concrete Block Wall Assembly with Masonry Ties Supporting Brick Veneer – Intermediate Floor Intersection at Balcony

Detail 7.2.19 ..... B.7.33

Exterior Insulated Concrete Block Wall Assembly with Thermally Broken Shelf Angle & Brick Ties Supporting Brick Veneer – Slab Intersection

Detail 7.2.20 ..... B.7.34

Interior Insulated Concrete Mass Wall with 1 5/8” x 1 5/8” Steel Studs (16” o.c.) Supporting Interior Finish – Isokorb Rutherma DF Thermally Broken Concrete Intermediate Floor Intersection

Detail 7.2.21 ..... B.7.35

Highly Insulated Precast Concrete Sandwich Panel Wall Assembly – Intermediate Floor Intersection with Inner Wythe Supported by Concrete Floor

Detail 7.2.22 ..... B.7.36

Owens Corning Exterior Insulated Concrete Block Wall Assembly with Shelf Angle and Heckmann Pos-I-Tie Veneer Anchoring System Supporting Brick Veneer – Intermediate Floor Intersection

Detail 7.2.23 ..... B.7.37

Owens Corning Exterior Insulated Concrete Block Wall Assembly with Stainless Steel Stand-off Shelf Angle and Heckmann Pos-I-Tie Veneer Anchoring System Supporting Brick Veneer – Intermediate Floor Intersection

Detail 7.3.1 ..... B.7.38

Exterior Insulated Concrete Drained EIFS Wall Assembly – Window and Intermediate Floor Intersection

Detail 7.3.2 ..... B.7.39

Interior Insulated Concrete Mass Wall with 1 5/8” x 1 5/8” Steel Studs (16” o.c.) Supporting Interior Finish – Window & Intermediate Floor Intersection

Detail 7.3.3 ..... B.7.40

Interior Insulated Concrete Mass Wall with 1 5/8” x 1 5/8” Steel Studs (16” o.c.) Supporting Interior Finish – Window & Projected Slab Intersection

Detail 7.3.4 ..... B.7.41

Precast Sandwich Panel Wall Assembly with Concrete at Panel Perimeter and Steel Connectors (24” o.c.) - Window Intersection

Detail 7.3.5 ..... B.7.42

Precast Sandwich Panel Wall Assembly with 3 5/8″ Steel Stud (16″ O.C.) – Window Intersection

Detail 7.3.6 ..... B.7.43

Exterior Insulated Concrete Drained EIFS Wall Assembly – Window with Aerogel and Intermediate Floor Intersection

Detail 7.3.7 ..... B.7.44

Interior Insulated Concrete Block or Concrete Wall Assembly with Brick Cladding - Window Intersection

Detail 7.3.8 ..... B.7.45

Interior Insulated Concrete Block or Concrete Wall Assembly with Brick Cladding - Window Intersection Aligned with Insulation

Detail 7.3.9 ..... B.7.46

Interior Insulated Concrete Mass Wall with 1 5/8” x 1 5/8” Steel Studs (16” o.c.) Supporting Interior Finish – Window & Projected Slab Intersection with Plywood and Insulation Liner

Detail 7.3.10 ..... B.7.47

Interior Insulated Concrete Mass Wall with 1 5/8” x 1 5/8” Steel Studs (16” o.c.) Supporting Interior Finish – Window & Projected Slab Intersection with Wall Insulation Wrapped into Opening

Detail 7.3.11 ..... B.7.48

Interior Insulated Concrete Mass Wall with 1 5/8” x 1 5/8” Steel Studs (16” o.c.) Supporting Interior Finish – Window & Projected Slab Intersection – Plywood Liner and Glazing Aligned with Wall Insulation

Detail 7.3.12 ..... B.7.49

Exterior Insulated Concrete Mass Wall with 1 5/8” x 1 5/8” Steel Stud (16” o.c.) and Thermally Isolated Vertical Brackets and Rail System (24” o.c.) Supporting Metal Cladding – Triple Glazed Aluminum Window & Intermediate Floor Intersection with Window Thermal Break Positioned in Concrete Opening

Detail 7.3.13 ..... **B.7.50**

Exterior Insulated Concrete Mass Wall with 1 5/8” x 1 5/8” Steel Stud (16” o.c.) and Thermally Isolated Vertical Brackets and Rail System (24” o.c.) Supporting Metal Cladding – Triple Glazed Aluminum Curtain Wall & Intermediate Floor Intersection with Window Thermal Break Positioned in the Exterior Insulation

Detail 7.3.14 ..... **B.7.51**

Owens Corning Exterior Insulated Concrete Block Wall Assembly with Heckmann Pos-I-Tie Veneer Anchoring System Supporting Brick Veneer with Insulation Interrupted at Window Perimeter – Double Glazed Aluminum Window and Intermediate Floor Intersection

Detail 7.3.15 ..... **B.7.52**

Owens Corning Exterior Insulated Concrete Block Wall Assembly with Heckmann Pos-I-Tie Veneer Anchoring System Supporting Brick Veneer with Reduced Insulation at Jambs – Triple Glazed Aluminum High Performance Window and Intermediate Floor Intersection

Detail 7.4.1 ..... **B.7.53**

Exterior Insulated Concrete Drained EIFS Wall Assembly – Conventional Curtain Wall Transition

Detail 7.4.2 ..... **B.7.54**

Precast Sandwich Panel Wall Assembly with 3 5/8″ Steel Stud (16″ o.c.) – Curtain Wall Spandrel Transition

Detail 7.4.3 ..... **B.7.55**

Interior Insulated Concrete Mass Wall – Conventional Curtain Wall Transition

Detail 7.4.4 ..... **B.7.56**

Interior Insulated Concrete Mass Wall – Thermally Broken Curtain Wall Transition

Detail 7.4.5 ..... **B.7.57**

Precast Sandwich Panel Wall Assembly – Tigerloc Thermally Broken Curtain Wall Transition

Detail 7.4.6 ..... **B.7.58**

Highly Insulated Precast Concrete Sandwich Panel Wall Assembly – High Performance Aluminum Window Sill Detail

Detail 7.4.7 ..... **B.7.59**

Highly Insulated Precast Concrete Sandwich Panel Wall Assembly – High Performance Aluminum Window Head Detail

Detail 7.5.1 ..... **B.7.60**

Exterior Insulated Concrete Drained EIFS Wall Assembly – Concrete Parapet & Slab Intersection

Detail 7.5.2 ..... **B.7.61**

Exterior Insulated Concrete Drained EIFS Wall Assembly – Insulated Concrete Parapet & Slab Intersection

Detail 7.5.3 ..... **B.7.62**

Interior Insulated Concrete Mass Wall with 1 5/8″ Steel Stud (16″ o.c) Supporting Interior Finish – Concrete Parapet & Roof Intersection

Detail 7.5.4 ..... **B.7.63**

Precast Sandwich Panel Wall Assembly with 3 5/8″ Steel Stud (16″ o.c.) – Steel Roof Deck with Open Web Steel Joist & Parapet Intersection

Detail 7.5.5 ..... **B.7.64**

Precast Sandwich Panel – Steel Roof Deck with Open Web Steel Joist & Parapet Intersection

Detail 7.5.6 ..... **B.7.65**

Precast Wall Assembly with 3 5/8″ x 1 5/8″ Steel Stud (16″ o.c) and Rigid Insulation Outboard of Studs – Parapet & Roof Intersection

Detail 7.5.7 ..... **B.7.66**

Precast Wall Assembly with 3 5/8″ x 1 5/8″ Steel Stud (16″ o.c) and Rigid Insulation Outboard of Studs – Parapet & Roof Intersection with Thermal Break under Parapet Stud Cavity and At Anchors

Detail 7.5.8 ..... **B.7.67**

Exterior Insulated Concrete Block Wall Assembly with Masonry Ties Supporting Brick Veneer – Parapet & Roof Intersection

Detail 7.5.9 ..... **B.7.68**

Precast Sandwich Panel – Steel Roof Deck with Open Web Steel Joist & Paraloc Thermally Broken Parapet Intersection

Detail 7.5.10 ..... **B.7.69**

Highly Insulated Precast Concrete Sandwich Panel Wall Assembly – Roof to Wall Intersection with Wood-Framed Parapet

Detail 7.5.11 ..... **B.7.70**

Owens Corning Exterior Insulated Concrete Block Wall Assembly with Heckmann Pos-I-Tie Veneer Anchoring System Supporting Brick Veneer – Roof to Wall Intersection with Uninsulated Parapet

Detail 7.5.12 ..... **B.7.71**

Owens Corning Exterior Insulated Concrete Block Wall Assembly with Heckmann Pos-I-Tie Veneer Anchoring System Supporting Brick Veneer – Roof to Wall Intersection with Insulation Wrapped Around Parapet

Detail 7.6.1 ..... **B.7.72**

Exterior Insulated Concrete Drained EIFS Wall Assembly – Corner Intersection

Detail 7.6.2 ..... **B.7.73**

Highly Insulated Precast Concrete Sandwich Panel Wall Assembly – Outside Corner

Detail 7.7.1 ..... **B.7.74**

Interior Insulated Concrete Mass Wall with 3 5/8” x 1 5/8” Steel Studs (16” o.c.) Supporting Interior Finish – Intermediate Floor Intersection above Parking Garage

Detail 7.7.2 ..... **B.7.75**

Insulated Concrete Floor Slab – Concrete Column Intersection

Detail 7.7.3 ..... **B.7.76**

Precast Sandwich Panel with 3 5/8” Steel Stud (16” o.c.) – Concrete Slab and Foundation Intersection

Detail 7.7.4 ..... **B.7.77**

Precast Sandwich Panel with 3 5/8” Steel Stud (16” o.c.) - Concrete Slab and Foundation Wall Intersection

Detail 7.7.5 ..... **B.7.78**

Precast Sandwich Panel with 3 5/8” Steel Stud (16” o.c.) – Thermally Broken Concrete Slab and Foundation Intersection

Detail 7.7.6 ..... **B.7.79**

Insulated Slab on Grade – Steel Column

Detail 7.7.7 ..... **B.7.80**

Insulated Slab on Grade – Armatherm 500 Thermal Break under Column

Detail 7.7.8 ..... **B.7.81**

Highly Insulated Precast Concrete Sandwich Panel Wall Assembly – Base of Wall at Foundation with Insulation Skirt

Detail 7.7.9 ..... **B.7.82**

Owens Corning Exterior Insulated Concrete Block Wall Assembly with Steel Shelf Angle and Heckmann Pos-I-Tie Veneer Anchoring System Supporting Brick Veneer and Insulation Below Floor – Slab on Grade and Foundation Intersection

Detail 7.7.10 ..... **B.7.83**

Owens Corning Exterior Insulated Concrete Block Wall Assembly with Stainless Steel Shelf Angle and Heckmann Pos-I-Tie Veneer Anchoring System Supporting Brick Veneer and Insulation Below Floor – Slab on Grade and Foundation Intersection

Detail 7.8.1 ..... **B.7.84**

Precast Sandwich Panel Wall Assembly – Emloc Thermally Broken Embedment Detail

Detail 7.1.1

Exterior Insulated Concrete Drained EIFS Wall Assembly - Clear Wall

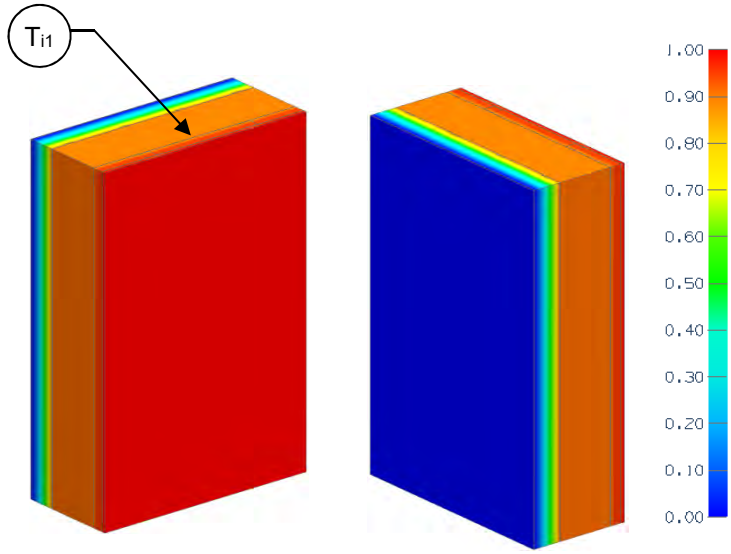

View from Interior View from Exterior

Thermal Performance Indicators

Assembly 1D (Nominal) R-Value	R_{1D}	R-3.0 (0.53 RSI) + exterior insulation
Transmittance / Resistance	U_o, R_o	"clear wall" U- and R-value
Surface Temperature Index[1]	T_i	0 = exterior temperature 1 = interior temperature

[1]Assumptions and limitations for surface temperatures identified in ASHRAE 1365-RP

Nominal (1D) vs. Assembly Performance Indicators

Exterior Insulation 1D R-Value (RSI)	R_{1D} ft²·hr·°F / Btu (m² K / W)	R_o ft²·hr·°F / Btu (m² K / W)	U_o Btu/ft² ·hr ·°F (W/m² K)
R-15 (2.64)	R-18.0 (3.17)	R-17.6 (3.10)	0.057 (0.32)

Temperature Indices

T_{i1}	0.89	Consistent temperature along interior concrete surface

Detail 7.1.3

Exterior Insulated Concrete Block Wall with Thermally Broken ISO Clip System with Horizontal Sub-Girt Supporting Cladding – Clear Wall

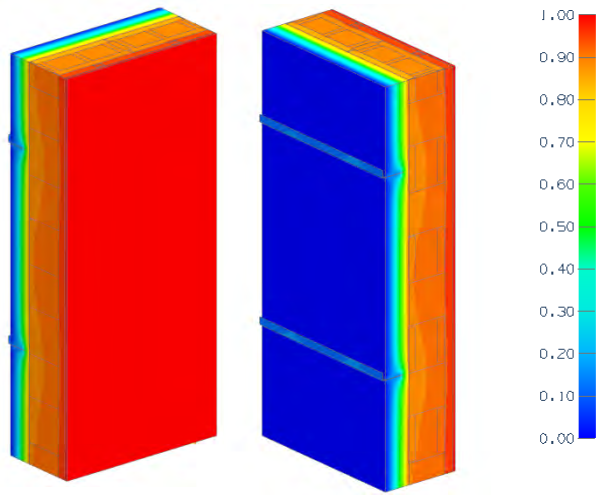

View from Interior View from Exterior

Thermal Performance Indicators

Assembly 1D (Nominal) R-Value	R_{1D}	R-4.2 (0.74 RSI) + exterior insulation
Transmittance / Resistance	U_o, R_o	"Clear wall" U- and R-value

Nominal (1D) vs. Assembly Performance Indicators

Horizontal Clip Spacing	Exterior Insulation 1D R-Value (RSI)	R_{1D} ft²·hr·°F / Btu (m² K / W)	24" Vertical Clip Spacing		36" Vertical Clip Spacing		48" Vertical Clip Spacing		60" Vertical Clip Spacing	
			R_o ft²·hr·°F / Btu (m² K / W)	U_o Btu/ft² ·hr ·°F (W/m² K)	R_o ft²·hr·°F / Btu (m² K / W)	U_o Btu/ft² ·hr ·°F (W/m² K)	R_o ft²·hr·°F / Btu (m² K / W)	U_o Btu/ft² ·hr ·°F (W/m² K)	R_o ft²·hr·°F / Btu (m² K / W)	U_o Btu/ft² ·hr ·°F (W/m² K)
16" o.c.	16.8 (2.96)	21 (3.70)	R-15.2 (2.68)	0.066 (0.374)	R-16.4 (2.89)	0.061 (0.345)	R-17.3 (3.04)	0.058 (0.329)	R-17.9 (3.15)	0.056 (0.318)
	21.0 (3.70)	25.2 (4.44)	R-16.9 (2.98)	0.059 (0.336)	R-18.6 (3.28)	0.054 (0.305)	R-19.8 (3.49)	0.050 (0.286)	R-20.7 (3.65)	0.048 (0.274)
	25.2 (4.44)	29.4 (5.18)	R-18.4 (3.24)	0.054 (0.309)	R-20.6 (3.63)	0.049 (0.276)	R-22.2 (3.91)	0.045 (0.256)	R-23.4 (4.12)	0.043 (0.243)
24" o.c.	16.8 (2.96)	21 (3.70)	R-16.1 (2.83)	0.062 (0.353)	R-17.2 (3.03)	0.058 (0.33)	R-18.0 (3.16)	0.056 (0.316)	R-18.5 (3.26)	0.054 (0.307)
	21.0 (3.70)	25.2 (4.44)	R-18.0 (3.17)	0.056 (0.316)	R-19.7 (3.46)	0.051 (0.289)	R-20.7 (3.65)	0.048 (0.274)	R-21.5 (3.78)	0.047 (0.264)
	25.2 (4.44)	29.4 (5.18)	R-19.6 (3.46)	0.051 (0.289)	R-21.8 (3.84)	0.046 (0.26)	R-23.2 (4.09)	0.043 (0.244)	R-24.3 (4.28)	0.041 (0.234)
32" o.c.	16.8 (2.96)	21 (3.70)	R-16.8 (2.95)	0.060 (0.339)	R-17.8 (3.14)	0.056 (0.319)	R-18.4 (3.25)	0.054 (0.308)	R-18.9 (3.33)	0.053 (0.300)
	21.0 (3.70)	25.2 (4.44)	R-18.8 (3.32)	0.053 (0.301)	R-20.4 (3.59)	0.049 (0.279)	R-21.3 (3.76)	0.047 (0.266)	R-22.0 (3.88)	0.045 (0.258)
	25.2 (4.44)	29.4 (5.18)	R-20.6 (3.63)	0.048 (0.275)	R-22.7 (4.00)	0.044 (0.250)	R-24.0 (4.22)	0.042 (0.237)	R-24.9 (4.39)	0.040 (0.228)

Detail 7.1.4

Exterior Insulated Concrete Assembly with Nvelope – NV1 Clip System Supporting Cladding – Clear Wall

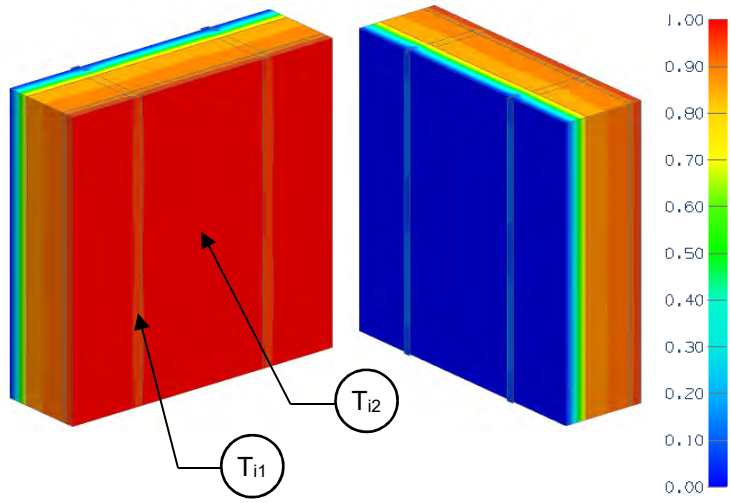

View from Interior View from Exterior

Thermal Performance Indicators

Assembly 1D (Nominal) R-Value	R_{1D}	R-3.4 (0.59 RSI) + exterior insulation
Transmittance / Resistance	U_o, R_o	"clear wall" U- and R-value
Surface Temperature Index[1]	T_i	0 = exterior temperature 1 = interior temperature

[1]Assumptions and limitations for surface temperatures identified in ASHRAE 1365-RP

Nominal (1D) vs. Assembly Performance Indicators

Exterior Insulation 1D R-Value (RSI)	R_{1D} ft²·hr·°F / Btu (m² K / W)	24" Vertical Spacing		36" Vertical Spacing		48" Vertical Spacing	
		R_o ft²·hr·°F / Btu (m² K / W)	U_o Btu/ft² ·hr ·°F (W/m² K)	R_o ft²·hr·°F / Btu (m² K / W)	U_o Btu/ft² ·hr ·°F (W/m² K)	R_o ft²·hr·°F / Btu (m² K / W)	U_o Btu/ft² ·hr ·°F (W/m² K)
R-8.4 (1.48)	R-11.8 (2.07)	R-10.2 (1.79)	0.098 (0.56)	R-10.5 (1.85)	0.095 (0.54)	R-10.7 (1.88)	0.094 (0.53)
R-12.6 (2.22)	R-16.0 (2.81)	R-12.8 (2.26)	0.078 (0.44)	R-13.4 (2.36)	0.075 (0.42)	R-13.8 (2.43)	0.073 (0.41)
R-16.8 (2.96)	R-20.2 (3.55)	R-15.3 (2.70)	0.065 (0.37)	R-16.4 (2.88)	0.061 (0.35)	R-17.0 (2.99)	0.059 (0.34)
R-21.0 (3.7)	R-24.4 (4.29)	R-17.4 (3.07)	0.057 (0.33)	R-18.9 (3.33)	0.053 (0.30)	R-19.9 (3.50)	0.050 (0.29)
R-25.2 (4.44)	R-28.6 (5.03)	R-19.3 (3.40)	0.052 (0.29)	R-21.3 (3.75)	0.047 (0.27)	R-22.5 (3.97)	0.044 (0.25)

Temperature Indices

	R8.4	R12.6	R16.8	R21	R25.1	
T_{i1}	0.80	0.84	0.86	0.88	0.89	Min T on interior concrete surface, at clip
T_{i2}	0.81	0.85	0.87	0.89	0.90	Max T on interior concrete surface, away from clips

Detail 7.1.5

Exterior Insulated Concrete Block Wall Assembly with Nvelope – NV1 Clip System Supporting Cladding – Clear Wall

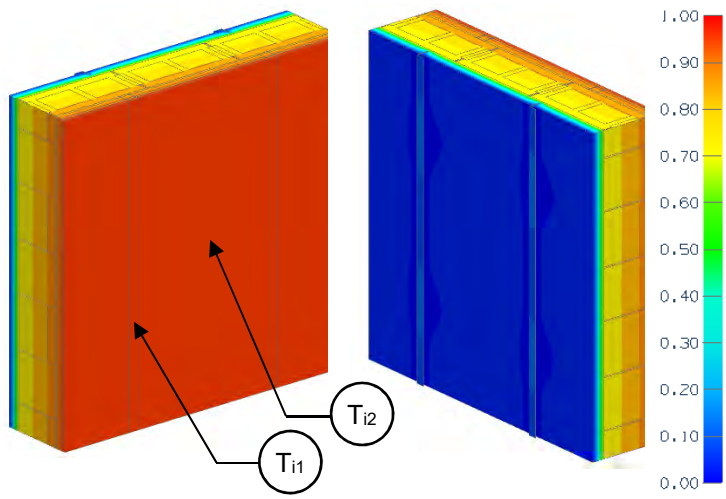

View from Interior View from Exterior

Thermal Performance Indicators

Assembly 1D (Nominal) R-Value	R_{1D}	R-3.9 (0.69 RSI) + exterior insulation
Transmittance / Resistance	U_o, R_o	"clear wall" U- and R-value
Surface Temperature Index[1]	T_i	0 = exterior temperature 1 = interior temperature

[1]Assumptions and limitations for surface temperatures identified in ASHRAE 1365-RP

Nominal (1D) vs. Assembly Performance Indicators

Exterior Insulation 1D R-Value (RSI)	R_{1D} ft²·hr·°F / Btu (m² K / W)	24" Vertical Spacing		36" Vertical Spacing		48" Vertical Spacing	
		R_o ft²·hr·°F / Btu (m² K / W)	U_o Btu/ft² ·hr ·°F (W/m² K)	R_o ft²·hr·°F / Btu (m² K / W)	U_o Btu/ft² ·hr ·°F (W/m² K)	R_o ft²·hr·°F / Btu (m² K / W)	U_o Btu/ft² ·hr ·°F (W/m² K)
R-8.4 (1.48)	R-12.3 (2.17)	R-10.8 (1.91)	0.092 (0.52)	R-11.2 (1.96)	0.090 (0.51)	R-11.3 (1.99)	0.088 (0.50)
R-12.6 (2.22)	R-16.5 (2.91)	R-13.5 (2.38)	0.074 (0.42)	R-14.1 (2.49)	0.071 (0.40)	R-14.4 (2.54)	0.069 (0.39)
R-16.8 (2.96)	R-20.7 (3.65)	R-16.1 (2.83)	0.062 (0.35)	R-17.1 (3.01)	0.058 (0.33)	R-17.7 (3.12)	0.057 (0.32)
R-21.0 (3.70)	R-24.9 (4.39)	R-18.3 (3.22)	0.055 (0.31)	R-19.7 (3.48)	0.051 (0.29)	R-20.6 (3.63)	0.048 (0.28)
R-25.2 (4.44)	R-29.1 (5.13)	R-20.2 (3.56)	0.049 (0.28)	R-22.2 (3.91)	0.045 (0.26)	R-23.4 (4.12)	0.043 (0.24)

Temperature Indices

	R8.4	R12.6	R16.8	R21	R25.1	
T_{i1}	0.81	0.85	0.87	0.88	0.89	Min T on interior concrete surface, at clip
T_{i2}	0.82	0.86	0.88	0.89	0.90	Max T on interior concrete surface, away from clips

Detail 7.1.6

Exterior Insulated Concrete Mass Wall Assembly with Hohmann & Barnard Masonry Zinc 2-Seal Anchor Supporting Brick Veneer – Clear Wall

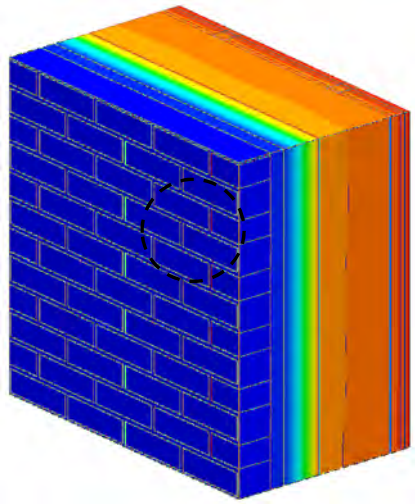

View of Exterior

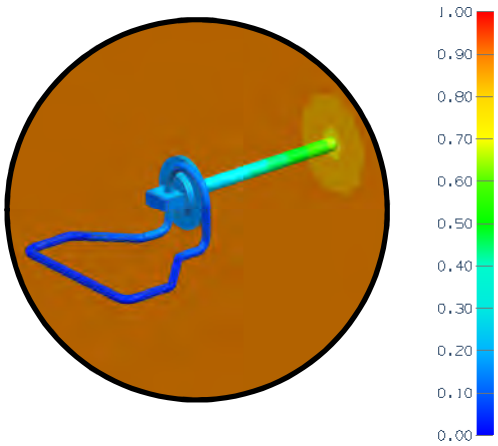

View of Anchoring Tie

Thermal Performance Indicators

Assembly 1D (Nominal) R-Value	R_{1D}	R-4.3 (0.76 RSI) + exterior insulation
Transmittance / Resistance	U_o, R_o	"Clear wall" U- and R-value: a = without batt insulation

Nominal (1D) vs. Assembly Performance Indicators

Exterior Insulation 1D R-Value (RSI)	R_{1D} ft²·hr·°F / Btu (m² K / W)	8" Vertical Clip Spacing		16" Vertical Clip Spacing		24" Vertical Clip Spacing	
		R_o ft²·hr·°F / Btu (m² K / W)	U_o Btu/ft² ·hr ·°F (W/m² K)	R_o ft²·hr·°F / Btu (m² K / W)	U_o Btu/ft² ·hr ·°F (W/m² K)	R_o ft²·hr·°F / Btu (m² K / W)	U_o Btu/ft² ·hr ·°F (W/m² K)
R-4.2 (0.74)	R-8.5 (1.50)	R-7.1 (1.25)	0.141 (0.800)	R-7.6 (1.33)	0.132 (0.750)	R-7.8 (1.37)	0.129 (0.730)
R-8.4 (1.48)	R-12.7 (2.24)	R-9.4 (1.66)	0.106 (0.604)	R-10.6 (1.87)	0.094 (0.535)	R-11.1 (1.96)	0.090 (0.509)
R-12.6 (2.22)	R-16.9 (2.98)	R-11.4 (2.01)	0.088 (0.497)	R-13.4 (2.36)	0.075 (0.424)	R-14.3 (2.52)	0.070 (0.397)
R-16.8 (2.96)	R-21.1 (3.72)	R-13.3 (2.35)	0.075 (0.426)	R-16.0 (2.82)	0.062 (0.355)	R-17.4 (3.06)	0.058 (0.327)

Detail 7.1.7

Exterior Insulated Concrete Mass Wall Assembly with Hohmann & Barnard Masonry Stainless Steel 2-Seal Thermal Wing Nut Anchor Supporting Brick Veneer – Clear Wall

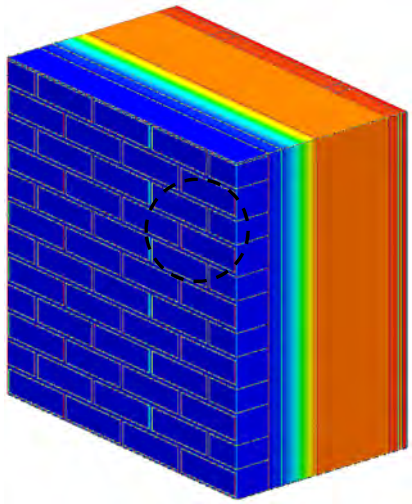

View of Exterior

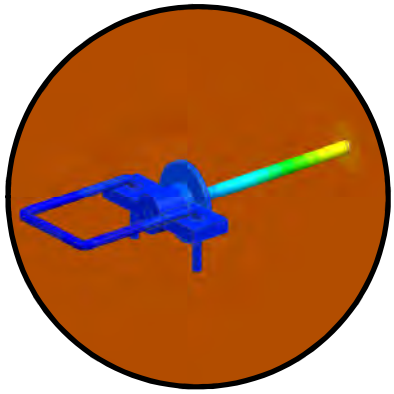

View of Anchoring Tie

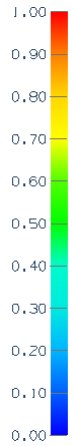

Thermal Performance Indicators

Assembly 1D (Nominal) R-Value	R_{1D}	R-4.4 (0.76 RSI) + exterior insulation
Transmittance / Resistance	U_o, R_o	"Clear wall" U- and R-value

Nominal (1D) vs. Assembly Performance Indicators

Exterior Insulation 1D R-Value (RSI)	R_{1D} ft²·hr·°F / Btu (m² K / W)	8" Vertical Clip Spacing		16" Vertical Clip Spacing		24" Vertical Clip Spacing	
		R_o ft²·hr·°F / Btu (m² K / W)	U_o Btu/ft² ·hr ·°F (W/m² K)	R_o ft²·hr·°F / Btu (m² K / W)	U_o Btu/ft² ·hr ·°F (W/m² K)	R_o ft²·hr·°F / Btu (m² K / W)	U_o Btu/ft² ·hr ·°F (W/m² K)
R-4.2 (0.74)	R-8.6 (1.51)	R-7.7 (1.36)	0.129 (0.733)	R-7.9 (1.40)	0.126 (0.714)	R-8.0 (1.41)	0.125 (0.710)
R-8.4 (1.48)	R-12.8 (2.25)	R-11.4 (2.00)	0.088 (0.499)	R-11.8 (2.08)	0.084 (0.480)	R-12.0 (2.11)	0.083 (0.473)
R-12.6 (2.22)	R-17.0 (2.99)	R-14.9 (2.63)	0.067 (0.380)	R-15.7 (2.76)	0.064 (0.362)	R-16.0 (2.81)	0.063 (0.356)
R-16.8 (2.96)	R-21.2 (3.73)	R-18.5 (3.26)	0.054 (0.307)	R-19.6 (3.45)	0.051 (0.290)	R-19.9 (3.50)	0.050 (0.286)

Detail 7.1.8

Precast Sandwich Panel Wall Assembly with Concrete Panel Joints – Clear Wall

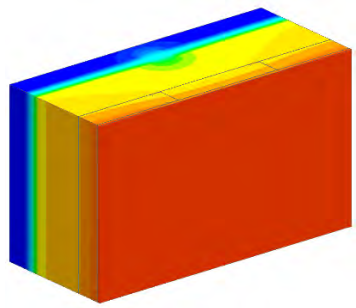

View from Interior

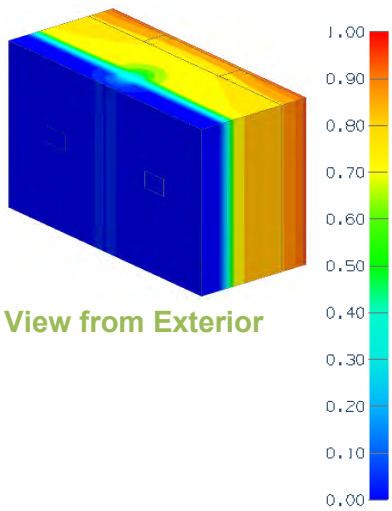

View from Exterior

Thermal Performance Indicators

Assembly 1D (Nominal) R-Value	R_{1D}	R-3.1 (0.55 RSI) + sandwich panel insulation
Transmittance / Resistance without Anomaly	U_o, R_o	"clear field" U- and R-values, without panel joint
Transmittance / Resistance	U, R	U- and R-values for overall assembly
Surface Temperature Index[1]	T_i	0 = exterior temperature 1 = interior temperature
Linear Transmittance	ψ	Incremental increase in transmittance per linear length of transition joint

[1]Assumptions and limitations for surface temperatures identified in ASHRAE 1365-RP

Nominal (1D) vs. Assembly Performance Indicators

Base Assembly – Wall

Sandwich Panel Insulation 1D R-value (RSI)	R_{1Dw} ft²·hr·°F / Btu (m² K / W)	R_o ft²·hr·°F / Btu (m² K / W)	U_o Btu/ft² ·hr ·°F (W/m² K)
R-10 (1.76)	R-13.1 (2.31)	R-12.8 (2.26)	0.078 (0.44)
R-15 (2.64)	R-18.1 (3.19)	R-17.7 (3.12)	0.056 (0.32)
R-20 (3.52)	R-23.1 (4.07)	R-22.6 (3.98)	0.044 (0.25)

Panel Joint Linear Transmittance

Sandwich Panel Insulation 1D R-value (RSI)	R ft²·hr·°F / Btu (m² K / W)	U Btu/ft² ·hr ·°F (W/m² K)	ψ Btu/ft ·hr ·°F (W/m K)
R-10 (1.76)	R-7.1 (1.26)	0.140 (0.79)	0.211 (0.37)
R-15 (2.64)	R-8.4 (1.48)	0.119 (0.68)	0.214 (0.37)
R-20 (3.52)	R-9.5 (1.68)	0.105 (0.60)	0.207 (0.36)

Detail 7.1.9

Precast Sandwich Panel Wall Assembly with Tigerloc Thermally Broken Panel Joints – Clear Wall

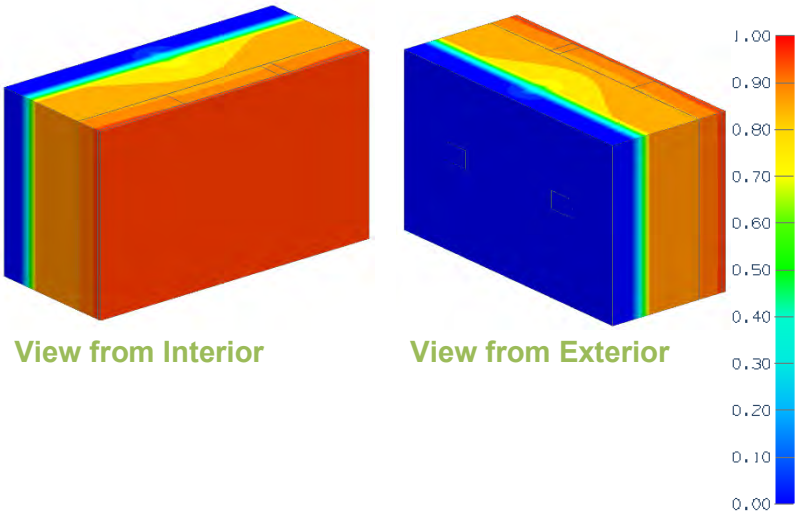

View from Interior

View from Exterior

Thermal Performance Indicators

Assembly 1D (Nominal) R-Value	R_{1D}	R-3.1 (0.55 RSI) + sandwich panel insulation
Transmittance / Resistance without Anomaly	U_o, R_o	"clear field" U- and R-values, without panel joint
Transmittance / Resistance	U, R	U- and R-values for overall assembly
Surface Temperature Index[1]	T_i	0 = exterior temperature 1 = interior temperature
Linear Transmittance	ψ	Incremental increase in transmittance per linear length of transition joint

[1]Assumptions and limitations for surface temperatures identified in ASHRAE 1365-RP

Nominal (1D) vs. Assembly Performance Indicators

Base Assembly – Wall

Sandwich Panel Insulation 1D R-value (RSI)	R_{1Dw} ft²·hr·°F / Btu (m² K / W)	R_o ft²·hr·°F / Btu (m² K / W)	U_o Btu/ft² ·hr ·°F (W/m² K)
R-10 (1.76)	R-13.1 (2.31)	R-12.8 (2.26)	0.078 (0.44)
R-15 (2.64)	R-18.1 (3.19)	R-17.7 (3.12)	0.056 (0.32)
R-20 (3.52)	R-23.1 (4.07)	R-22.6 (3.98)	0.044 (0.25)

Panel Joint Linear Transmittance

Sandwich Panel Insulation 1D R-value (RSI)	R ft²·hr·°F / Btu (m² K / W)	U Btu/ft² ·hr ·°F (W/m² K)	ψ Btu/ft ·hr ·°F (W/m K)
R-10 (1.76)	R-9.3 (1.65)	0.107 (0.61)	0.099 (0.17)
R-15 (2.64)	R-12.0 (2.11)	0.084 (0.47)	0.092 (0.16)
R-20 (3.52)	R-14.5 (2.56)	0.069 (0.39)	0.084 (0.15)

Detail 7.1.10

Precast Concrete Sandwich Panel Wall Assembly with FRP Connectors – Clear Wall Detail

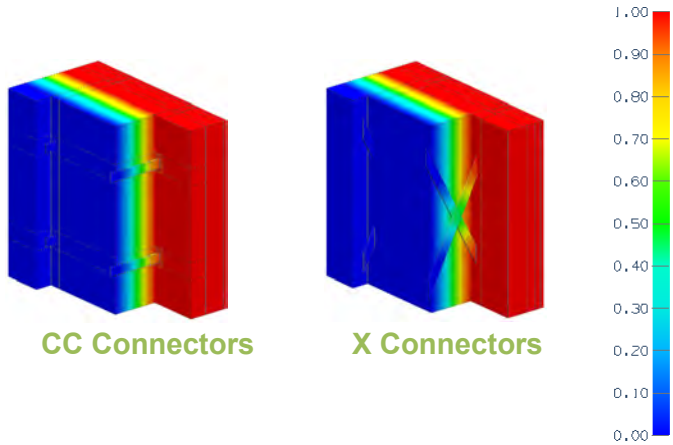

CC Connectors X Connectors

Thermal Performance Indicators

Assembly 1D (Nominal) R-Value	R_{1D}	R-2.76 (0.49 RSI) + insulation
Transmittance / Resistance without Anomaly	U_o, R_o	"clear field" U- and R-value, without connectors or joint
Transmittance / Resistance	U, R	U- and R-values for the overall assembly
Linear Transmittance	Ψ	Incremental increase in transmittance for vertical joints
Point Transmittance	χ	Incremental increase in transmittance for connector

Scenarios

Scenario	Connector Arrangement
A	CC Connectors, 16" x 16" spacing
B	X Connectors, 16" x 32" spacing

Nominal (1D) vs. Assembly Performance Indicators

Base Assembly – Wall

Wall Insulation R-Value/in	Wall Insulation 1D R-Value (RSI)	R_{1D} ft²·hr·°F / Btu (m² K / W)	R_o ft²·hr·°F / Btu (m² K / W)	U_o Btu/ft² ·hr ·°F (W/m² K)
5	R-40 (7.04)	R-42.8 (7.53)	R-42.3 (7.45)	0.024 (0.13)
6	R-48 (8.45)	R-50.8 (8.94)	R-50.3 (8.86)	0.020 (0.11)
7	R-56 (9.86)	R-58.8 (10.35)	R-58.3 (10.27)	0.017 (0.10)

Connector Point Transmittance

Scenario	Wall Insulation R-Value/in	R ft²·hr·°F / Btu (m² K / W)	U Btu/ft² ·hr ·°F (W/m² K)	χ Btu/hr·°F (W/K)
A	5	R-39.5 (6.96)	0.025 (0.14)	0.0008 (0.0016)
	6	R-46.3 (8.16)	0.022 (0.12)	0.0008 (0.0016)
	7	R-53.0 (9.33)	0.019 (0.11)	0.0009 (0.0016)
B	5	R-40.1 (7.07)	0.025 (0.14)	0.0013 (0.0024)
	6	R-47.3 (8.33)	0.021 (0.12)	0.0012 (0.0023)
	7	R-54.4 (9.58)	0.018 (0.10)	0.0012 (0.0023)

Vertical Joint Linear Transmittance

Wall Insulation R-Value/in	R ft²·hr·°F / Btu (m² K / W)	U Btu/ft² ·hr ·°F (W/m² K)	Ψ Btu/ft·hr·°F (W/mK)
5	R-39.4 (6.94)	0.025 (0.14)	0.0001 (0.0002)
6	R-46.0 (8.10)	0.022 (0.12)	0.0004 (0.0007)
7	R-52.4 (9.22)	0.019 (0.11)	0.0006 (0.0010)

Detail 7.1.11

Exterior Insulated Concrete Block Wall with Armadillo FRR Horizontal Z-Girts Supporting Cladding – Clear Wall

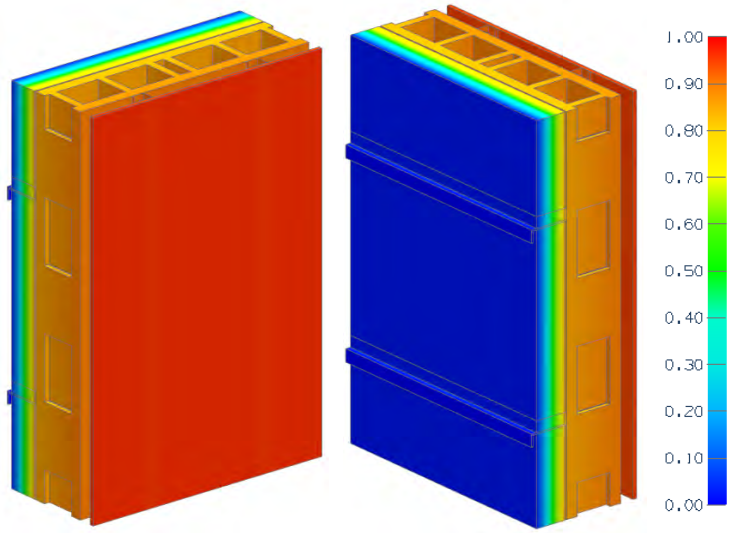

View from Interior View from Exterior

Thermal Performance Indicators

Assembly 1D (Nominal) R-Value	R_{1D}	R-5.6 (0.98 RSI) + exterior insulation
Transmittance / Resistance	U_o, R_o	"clear wall" U- and R-value

[1]Assumptions and limitations for surface temperatures identified in ASHRAE 1365-RP

Nominal (1D) vs. Assembly Performance Indicators

Exterior Insulation 1D R-Value (RSI)	R_{1D} ft²·hr·°F / Btu (m² K / W)	R_o ft²·hr·°F / Btu (m² K / W)	U_o Btu/ft² ·hr ·°F (W/m² K)
R-10.0 (1.76)	R-15.6 (2.74)	R-13.5 (2.37)	0.074 (0.42)
R-15.0 (2.64)	R-20.6 (3.62)	R-18.2 (3.20)	0.055 (0.31)
R-20.0 (3.52)	R-25.6 (4.50)	R-22.9 (4.04)	0.044 (0.25)
R-25.0 (4.40)	R-30.6 (5.38)	R-27.6 (4.86)	0.036 (0.21)

Detail 7.1.12

Exterior Insulated Concrete Block Wall with Vertical Clips Supporting Cladding – Clear Wall

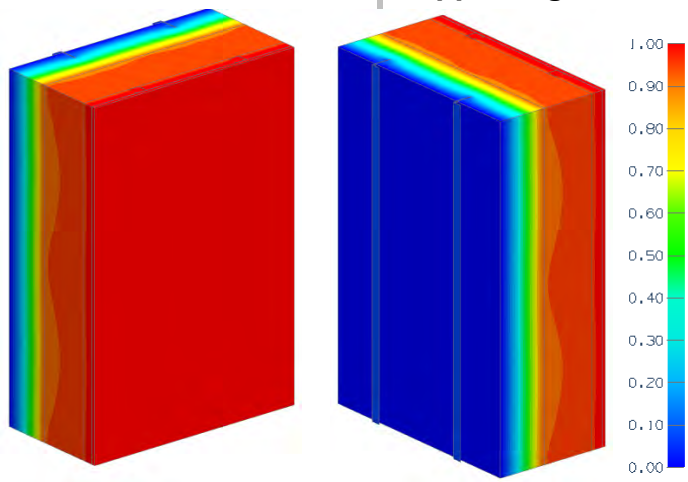

View from Interior View from Exterior

Thermal Performance Indicators

Assembly 1D (Nominal) R-Value	R_{1D}	R-3.9 (0.69) + insulation
Transmittance / Resistance without Anomaly	U_o, R_o	"clear field" U- and R-value, without connectors or joint

Nominal (1D) vs. Assembly Performance Indicators

Exterior Insulation 1D R-Value (RSI)	R_{1D} ft²·hr·°F / Btu (m² K / W)	R_o ft²·hr·°F / Btu (m² K / W)	U_o Btu/ft² ·hr ·°F (W/m² K)
R-8.4 (1.48)	R-12.3 (2.17)	R-10.2 (1.79)	0.098 (0.56)
R-12.6 (2.22)	R-16.5 (2.91)	R-12.2 (2.14)	0.082 (0.47)
R-16.8 (2.96)	R-20.7 (3.65)	R-14.4 (2.53)	0.070 (0.40)
R-21.0 (3.70)	R-24.9 (4.39)	R-16.2 (2.85)	0.062 (0.35)
R-25.2 (4.44)	R-29.1 (5.13)	R-17.9 (3.16)	0.056 (0.32)
R-29.4 (5.18)	R-33.3 (5.87)	R-19.6 (3.45)	0.051 (0.29)

Detail 7.1.13

Exterior Insulated Concrete Block Wall Assembly with Brick Ties Supporting Brick Veneer – Clear Wall

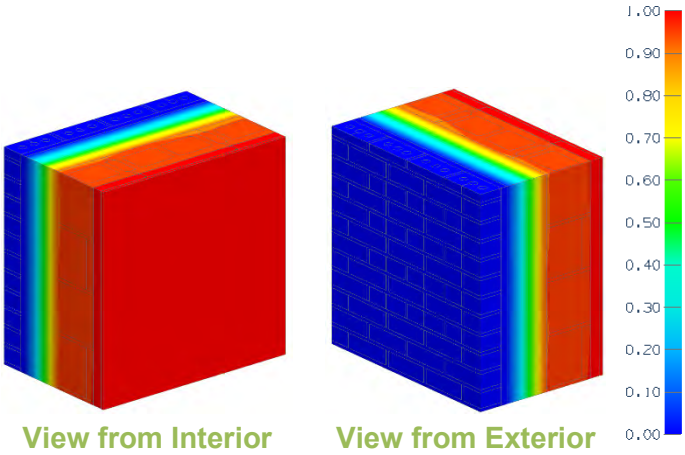

Thermal Performance Indicators

Assembly 1D (Nominal) R-Value	R_{1D}	R-5.6 (0.99) + insulation
Transmittance / Resistance without Anomaly	U_o, R_o	"clear field" U- and R-value, without connectors or joint
Surface Temperature Index[1]	T_i	0 = exterior temperature 1 = interior temperature

Nominal (1D) vs. Assembly Performance Indicators

Exterior Insulation 1D R-Value (RSI)	R_{1D} ft²·hr·°F / Btu (m² K / W)	R_o ft²·hr·°F / Btu (m² K / W)	U_o Btu/ft² ·hr ·°F (W/m² K)
R-5.0 (0.88)	R-10.6 (1.87)	R-10.4 (1.83)	0.096 (0.55)
R-10.0 (1.76)	R-15.6 (2.75)	R-14.2 (2.50)	0.070 (0.40)
R-15.0 (2.64)	R-20.6 (3.63)	R-17.8 (3.13)	0.056 (0.32)
R-20.0 (3.52)	R-25.6 (4.51)	R-20.8 (3.66)	0.048 (0.27)
R-25.0 (4.40)	R-30.6 (5.39)	R-23.7 (4.17)	0.042 (0.24)
R-30.0 (5.28)	R-35.6 (6.27)	R-26.8 (4.71)	0.037 (0.21)
R-35.0 (6.16)	R-40.6 (7.15)	R-29.4 (5.17)	0.034 (0.19)
R-40.0 (7.04)	R-45.6 (8.04)	R-31.9 (5.61)	0.031 (0.18)

Detail 7.1.14

Interior Insulated Concrete Mass Wall with 1 5/8" Steel Stud (16" o.c.) Supporting Interior Finish Wall Assembly – Clear Wall

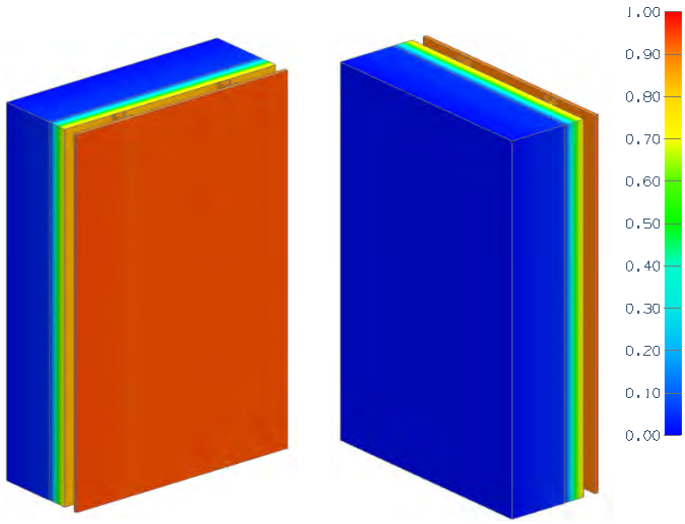

View from Interior View from Exterior

Thermal Performance Indicators

Assembly 1D (Nominal) R-Value	R_{1D}	R-2.9 (0.51 RSI) + interior insulation
Transmittance / Resistance	U_o, R_o	"clear wall" U- and R-value

Nominal (1D) vs. Assembly Performance Indicators

Interior Insulation 1D R-value (RSI)	R_{1D} ft²·hr·°F / Btu (m² K / W)	R_o ft²·hr·°F / Btu (m² K / W)	U_o Btu/ft² ·hr ·°F (W/m² K)
R-10 (1.76)	R-12.9 (2.27)	R-12.9 (2.26)	0.078 (0.44)
R-12.5 (2.20)	R-15.4 (2.71)	R-15.4 (2.70)	0.065 (0.37)
R-15 (2.64)	R-17.9 (3.15)	R-17.9 (3.14)	0.056 (0.32)

Detail 7.1.15

Precast Sandwich Panel Wall Assembly with Steel Connectors and 3 5/8" x 1 5/8" Steel Stud (16" o.c.) – Clear Wall

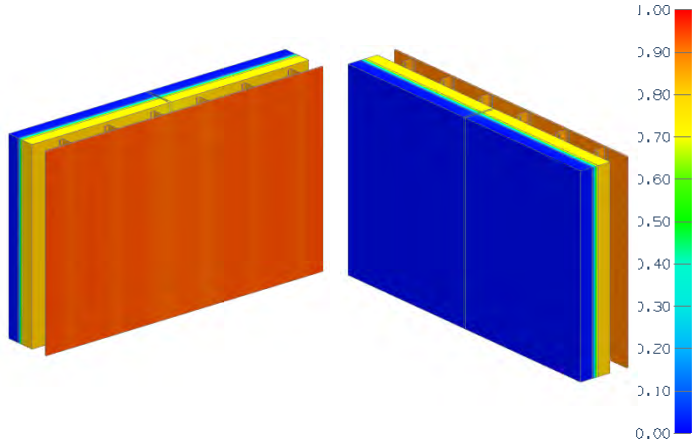

View from Interior View from Exterior

Thermal Performance Indicators

Assembly 1D (Nominal) R-Value	R_{1D}	R-3.9 (0.69 RSI) + sandwich panel insulation
Transmittance / Resistance without Anomaly	U_o, R_o	"clear wall" U- and R-value without panel joints
Transmittance / Resistance	U_j, R_j	U and R values for: j = panel joint
Linear Transmittance	ψ_j	Incremental increase in transmittance per linear length of: j = panel joint

Nominal (1D) vs. Assembly Performance Indicators

Base Assembly – Panel without Joints

Steel Connector Spacing in (mm)	Sandwich Panel Insulation 1D R-value (RSI)	R_{1D} ft²·hr·°F / Btu (m² K / W)	R_o ft²·hr·°F / Btu (m² K / W)	U_o Btu/ft² ·hr ·°F (W/m² K)
16 (406)	R-10 (1.76)	R-13.9 (2.45)	R-12.0 (2.11)	0.083 (0.47)
24 (610)	R-10 (1.76)	R-13.9 (2.45)	R-12.6 (2.22)	0.079 (0.45)
36 (914)	R-10 (1.76)	R-13.9 (2.45)	R-12.6 (2.22)	0.079 (0.45)
48 (1220)	R-10 (1.76)	R-13.9 (2.45)	R-12.6 (2.22)	0.079 (0.45)

Panel Joint Linear Transmittances

Panel Perimeter	Steel Connector Spacing in (mm)	R_j ft²·hr·°F / Btu (m² K / W)	U_j Btu/ft² ·hr ·°F (W/m² K)	ψ_j Btu/ft² ·hr ·°F (W/m² K)
Concrete	24 (610)	R-6.2 (1.10)	0.160 (0.91)	0.653 (1.130)
Insulation	16 (406)	R-11.6 (2.03)	0.087 (0.49)	0.026 (0.046)
	24 (610)	R-11.7 (2.05)	0.086 (0.49)	0.026 (0.046)
	36 (914)	R-12.0 (2.11)	0.084 (0.48)	0.036 (0.062)
	48 (1220)	R-12.1 (2.12)	0.083 (0.47)	0.030 (0.052)

Detail 7.2.1

Exterior Insulated Concrete Drained EIFS Wall Assembly – Intermediate Floor Intersection

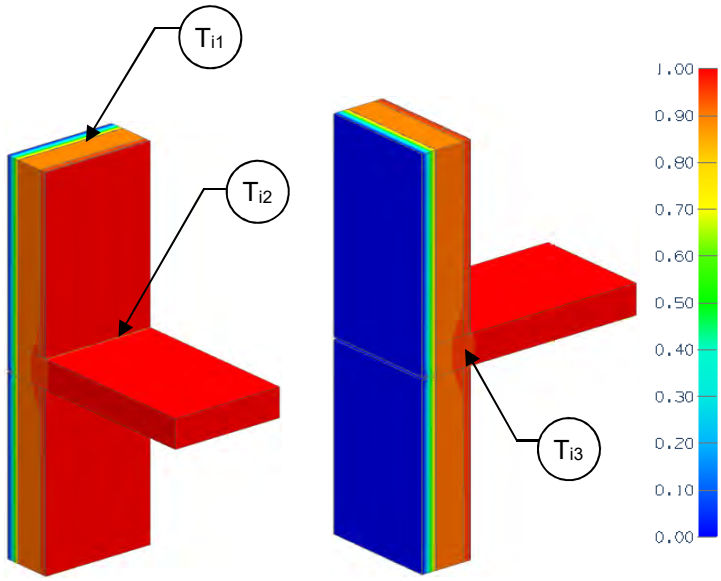

View from Interior View from Exterior

Thermal Performance Indicators

Assembly 1D (Nominal) R-Value	R_{1D}	R-3.0 (0.53 RSI) + exterior insulation
Transmittance / Resistance without Anomaly	U_o, R_o	"clear wall" U- and R-value without slab
Transmittance / Resistance	U, R	U- and R-values for overall assembly
Surface Temperature Index[1]	T_i	0 = exterior temperature 1 = interior temperature
Linear Transmittance	ψ	Incremental increase in transmittance per linear length of slab

[1]Assumptions and limitations for surface temperatures identified in ASHRAE 1365-RP

Nominal (1D) vs. Assembly Performance Indicators

Exterior Insulation 1D R-Value (RSI)	R_{1D} ft²·hr·°F / Btu (m² K / W)	R_o ft²·hr·°F / Btu (m² K / W)	U_o Btu/ft² ·hr ·°F (W/m² K)	R ft²·hr·°F / Btu (m² K / W)	U Btu/ft² ·hr ·°F (W/m² K)	ψ Btu/ft ·hr ·°F (W/m K)
R-15 (2.64)	R-18.0 (3.17)	R-17.6 (3.10)	0.057 (0.32)	R-17.1 (3.02)	0.058 (0.33)	0.013 (0.023)

Temperature Indices

T_{i1}	0.89	Min T on concrete wall, between studs away from floor slab
T_{i2}	0.92	Max T on concrete, along steel track of floor slab
T_{i3}	0.94	Min T on slab, at edge interior drywall, exposed to interior air

Detail 7.2.2

Interior Insulated Concrete Mass Wall with 1 5/8″ Steel Stud (16″ o.c.) Supporting Interior Finish – Non-Insulated Interior Wall and Non-insulated Intermediate Floor Intersection

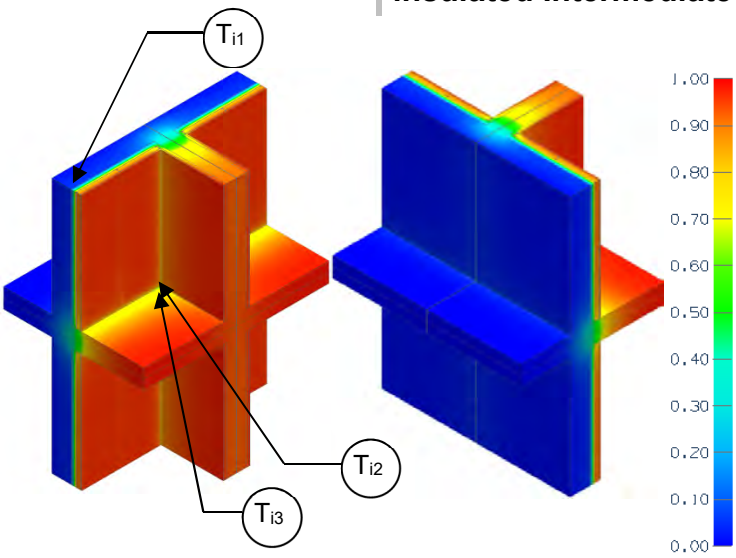

View from Interior View from Exterior

Thermal Performance Indicators

Assembly 1D (Nominal) R-Value	R_{1D}	Nominal thermal resistance of exterior wall
Transmittance / Resistance without Anomaly	U_o, R_o	"clear wall" U- and R-value of just concrete wall and steel stud assembly
Transmittance / Resistance	U_s, R_s, U_i, R_i	U and R-values for: s = concrete wall + slab i = concrete wall + interior wall
Transmittance / Resistance	U, R	U- and R-values for overall assembly
Surface Temperature Index[1]	T_i	0 = exterior temperature 1 = interior temperature
Linear Transmittance	ψ_s, ψ_i	Incremental increase in transmittance per linear length of: s = slab i = interior wall
Point Transmittance	χ	Incremental increase in transmittance for inner wall and slab intersection

[1]Assumptions and limitations for surface temperatures identified in ASHRAE 1365-RP

Nominal (1D) vs. Assembly Performance Indicators

Base Assembly – Wall

R_{1D} ft²·hr·°F / Btu (m² K / W)	R_o ft²·hr·°F / Btu (m² K / W)	U_o Btu/ft² ·hr ·°F (W/m² K)
R-13.9 (2.44)	R-13.5 (2.37)	0.074 (0.42)

Slab Linear Transmittance

R_s ft²·hr·°F / Btu (m² K / W)	U_s Btu/ft² ·hr ·°F (W/m² K)	ψ_s Btu/ft hr °F (W/m K)
R-7.0 (1.22)	0.144 (0.82)	0.465 (0.805)

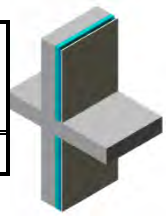

Interior Linear Transmittance

R_i ft²·hr·°F / Btu (m² K / W)	U_i Btu/ft² ·hr ·°F (W/m² K)	ψ_i Btu/ft hr °F (W/m K)
R-7.4 (1.30)	0.135 (0.77)	0.385 (0.666)

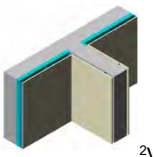

Intersection Point Transmittance

R ft²·hr·°F / Btu (m² K / W)	U Btu/ft² ·hr ·°F (W/m² K)	χ[2] Btu/ft hr °F (W/K)
R-4.4 (0.77)	0.228 (1.30)	-0.48 (-0.25)

[2]Values are negative for a correction factor. See section 6 in ASHRAE 1365-RP for clarification.

Temperature Indices

T_{i1}	0.06	Min T on concrete wall, between studs, away from wall and slab
T_{i2}	0.35	Max T on concrete wall, at corner intersection
T_{i3}	0.59	Min T on interior surface, at corner intersection

Detail 7.2.3

Interior Insulated Concrete Mass Wall with 1 5/8″ Steel Stud (16″ o.c.) Supporting Interior Finish – Insulated Interior Wall and Non-insulated Intermediate Floor Intersection

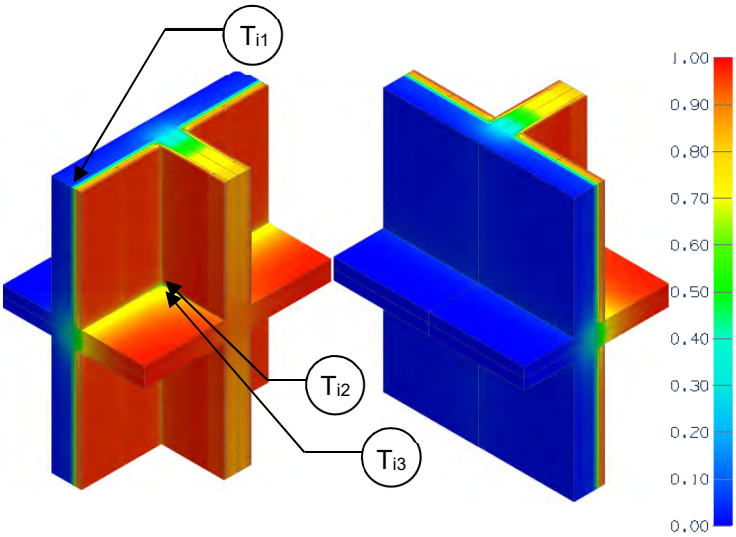

View from Interior View from Exterior

Thermal Performance Indicators

Assembly 1D (Nominal) R-Value	R_{1D}	Nominal thermal resistance of exterior wall
Transmittance / Resistance without Anomaly	U_o, R_o	"clear wall" U- and R-value of just concrete wall and steel stud assembly
Transmittance / Resistance	U_s, R_s, U_i, R_i	U and R values for: s = concrete wall + slab i = concrete wall + interior wall
Transmittance / Resistance	U, R	U- and R-values for overall assembly
Surface Temperature Index[1]	T_i	0 = exterior temperature 1 = interior temperature
Linear Transmittance	ψ_s, ψ_i	Incremental increase in transmittance per linear length of: s = slab i = interior wall
Point Transmittance	χ	Incremental increase in transmittance for inner wall and slab intersection

[1]Assumptions and limitations for surface temperatures identified in ASHRAE 1365-RP

Nominal (1D) vs. Assembly Performance Indicators

Base Assembly – Wall

R_{1D} ft²·hr·°F / Btu (m² K / W)	R_o ft²·hr·°F / Btu (m² K / W)	U_o Btu/ft² ·hr ·°F (W/m² K)
R-13.9 (2.44)	R-13.5 (2.37)	0.074 (0.42)

Slab Linear Transmittance

R_s ft²·hr·°F / Btu (m² K / W)	U_s Btu/ft² ·hr ·°F (W/m² K)	ψ_s Btu/ft hr °F (W/m K)
R-7.0 (1.22)	0.144 (0.82)	0.465 (0.805)

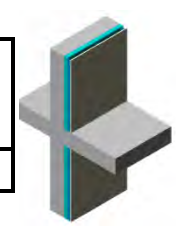

Interior Wall Linear Transmittance

R_i ft²·hr·°F / Btu (m² K / W)	U_i Btu/ft² ·hr ·°F (W/m² K)	ψ_i Btu/ft hr °F (W/m K)
R-8.6 (1.52)	0.116 (0.66)	0.262 (0.454)

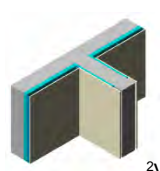

Intersection Point Transmittance

R ft²·hr·°F / Btu (m² K / W)	U Btu/ft² ·hr ·°F (W/m² K)	χ[2] Btu/ft hr °F (W/K)
R-6.1 (1.07)	0.164 (0.93)	-0.29 (-0.16)

[2]Values are negative for a correction factor. See section 6 in ASHRAE-1365 RP for clarification.

Temperature Indices

Ti1	0.06	Min T on concrete wall between studs, away from wall and slab
Ti2	0.34	Max T on concrete wall, at corner intersection
Ti3	0.57	Min T on interior surface, at corner intersection

Detail 7.2.4

Interior Insulated Concrete Mass Wall with 3 5/8" x 1 5/8" Steel Studs (16" o.c.) Supporting Interior Finish – Interior Insulated Wall and Non-Insulated Partition Wall Intersection

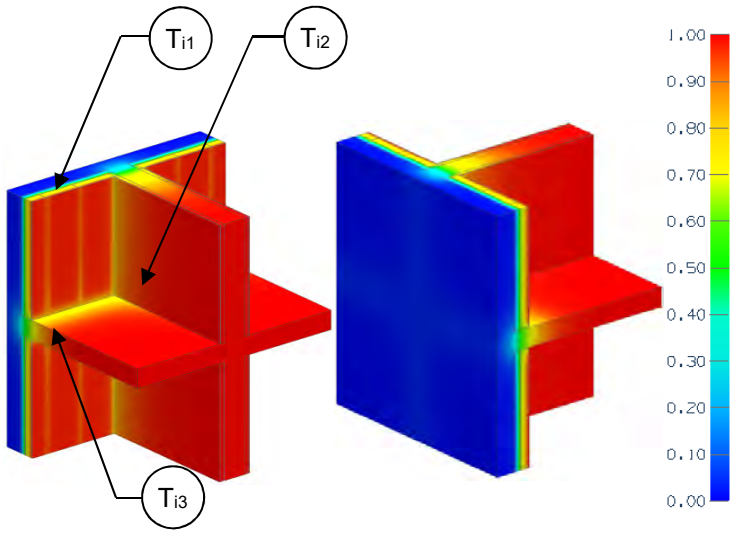

View from Interior View from Exterior

Thermal Performance Indicators

Assembly 1D (Nominal) R-Value	R_{1D}	R-14 (2.47 RSI) + interior insulation
Transmittance / Resistance without Anomaly	U_o, R_o	"clear wall" U- and R-value of just concrete wall and steel stud assembly
Transmittance / Resistance	U_s, R_s, U_i, R_i, U_t, R_t	U and R values for: s = concrete wall + slab i = concrete wall + interior wall t = combined concrete wall + slab + interior wall
Surface Temperature Index[1]	T_i	0 = exterior temperature 1 = interior temperature
Linear Transmittance	ψ_s, ψ_i	Incremental increase in transmittance per linear length of: s = slab i = interior wall
Point Transmittance	χ	Incremental increase in transmittance for inner wall and slab intersection

[1]Assumptions and limitations for surface temperatures identified in ASHRAE 1365-RP

Nominal (1D) vs. Assembly Performance Indicators

Base Assembly – Wall

Interior Insulation 1D R-Value (RSI)	R_{1D} ft²·hr·°F / Btu (m² K / W)	R_o ft²·hr·°F / Btu (m² K / W)	U_o Btu/ft² ·hr ·°F (W/m² K)
R-10 (1.76)	R-24.0 (4.23)	R-19.8 (3.49)	0.050 (0.29)
R-15 (2.64)	R-29.0 (5.11)	R-24.9 (4.38)	0.040 (0.23)

Slab Linear Transmittance

R_s ft²·hr·°F / Btu (m² K / W)	U_s Btu/ft² ·hr ·°F (W/m² K)	ψ_s Btu/ft ·hr·°F (W/m K)
R-9.5 (1.67)	0.105 (0.60)	0.476 (0.824)
R-10.7 (1.89)	0.093 (0.53)	0.460 (0.797)

Interior Wall Linear Transmittance

Interior Insulation 1D R-Value (RSI)	R_i ft²·hr·°F / Btu (m² K / W)	U_i Btu/ft² ·hr ·°F (W/m² K)	ψ_i Btu/ft ·hr·°F (W/m K)
R-10 (1.76)	R-10.4 (1.83)	0.097 (0.55)	0.360 (0.622)
R-15 (2.64)	R-10.8 (1.90)	0.093 (0.53)	0.410 (0.710)

Intersection Point Transmittance

R_t ft²·hr·°F / Btu (m² K / W)	U_t Btu/ft² ·hr ·°F (W/m² K)	χ[2] Btu/ft ·hr·°F (W/K)
R-6.7 (1.19)	0.149 (0.84)	-0.184 (-0.098)
R-7.4 (1.30)	0.136 (0.77)	-0.670 (-0.353)

[2]Values are negative for a correction factor. See section 6 in ASHRAE-1365 RP for clarification.

Temperature Indices

	R10	R15	
T_{i1}	0.04	0.03	Min T on concrete wall, between studs, away from wall and slab
T_{i2}	0.29	0.27	Max T on concrete wall, at corner intersection
T_{i3}	0.27	0.27	Min T on slab, at exterior wall away from intersection

Detail 7.2.5

Interior Insulated Concrete Mass Wall with 1 5/8" x 1 5/8" Steel Studs (16" o.c.) Supporting Interior Finish – Continuous Concrete Intermediate Floor Intersection

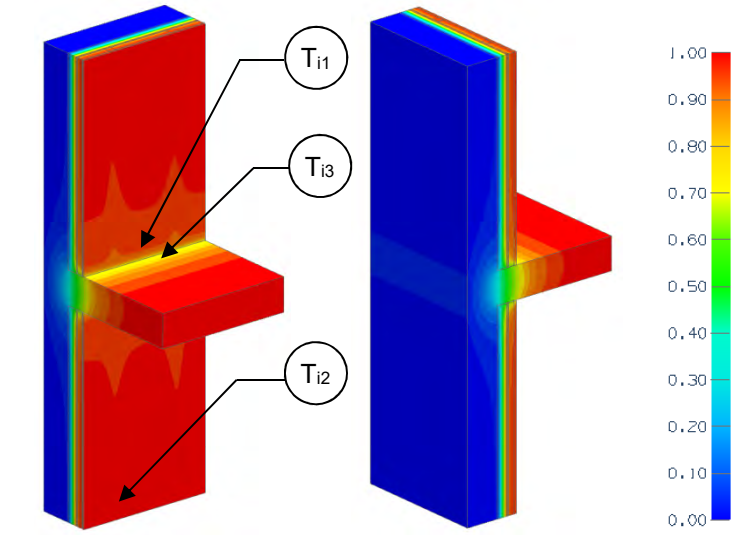

View from Interior View from Exterior

Thermal Performance Indicators

Assembly 1D (Nominal) R-Value	R_{1D}	R-2.9 (0.51 RSI) + interior insulation
Transmittance / Resistance without Anomaly	U_o, R_o	"clear wall" U- and R-value, without slab
Transmittance / Resistance	U, R	U and R-values for the assembly
Surface Temperature Index[1]	T_i	0 = exterior temperature 1 = interior temperature
Linear Transmittance	ψ	Incremental increase in transmittance per linear length of slab

[1]Assumptions and limitations for surface temperatures identified in ASHRAE 1365-RP

Nominal (1D) vs. Assembly Performance Indicators

Exterior Insulation 1D R-Value (RSI)	R_{1D} ft²·hr·°F / Btu (m² K / W)	R_o ft²·hr·°F / Btu (m² K / W)	U_o Btu/ft² ·hr ·°F (W/m² K)	R ft²·hr·°F / Btu (m² K / W)	U Btu/ft² ·hr ·°F (W/m² K)	ψ Btu/ft hr °F (W/m K)
R-12.5 (2.20)	R-15.4 (2.71)	R-15.4 (2.70)	0.065 (0.37)	R-8.1 (1.43)	0.123 (0.70)	0.500 (0.865)

Temperature Indices

T_{i1}	0.85	Min T on insulation away from slab, between studs
T_{i2}	0.87	Max T on insulation away from slab, at studs
T_{i3}	0.58	Min T on slab exposed to interior air, at insulation between studs

Detail 7.2.6

Precast Wall Assembly with 3 5/8″ x 1 5/8″ Steel Stud (16″ o.c) and Insulation in Stud Cavity – Intermediate Floor Intersection

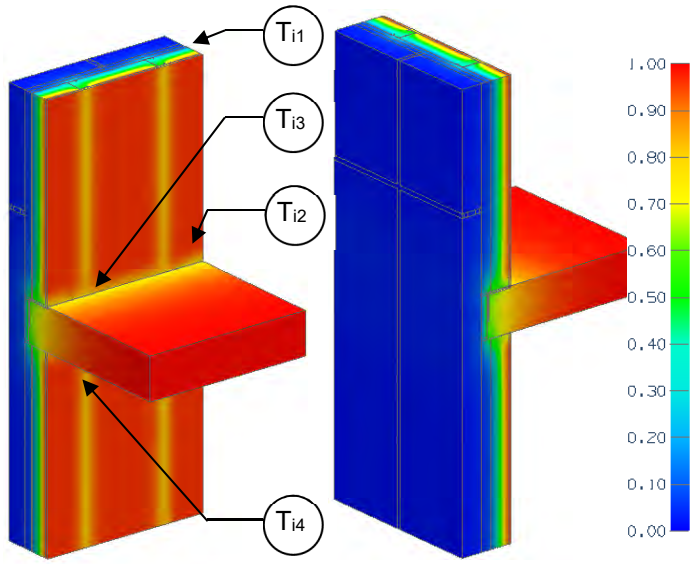

View from Interior View from Exterior

Thermal Performance Indicators

Assembly 1D (Nominal) R-Value	R_{1D}	Nominal thermal resistance of wall
Transmittance / Resistance without Anomaly	U_o, R_o	"clear wall" U- and R-value, without slab and anchor connections
Transmittance / Resistance	U, R	U- and R-values for overall assembly
Surface Temperature Index[1]	T_i	0 = exterior temperature 1 = interior temperature
Linear Transmittance	ψ	Incremental increase in transmittance per linear length of slab

[1]Assumptions and limitations for surface temperatures identified in ASHRAE 1365-RP

Nominal (1D) vs. Assembly Performance Indicators

Base Assembly – Wall

R_{1D} ft²·hr·°F / Btu (m² K / W)	R_o ft²·hr·°F / Btu (m² K / W)	U_o Btu/ft² ·hr ·°F (W/m² K)
R-14.5 (2.55)	R-8.5 (1.49)	0.118 (0.67)

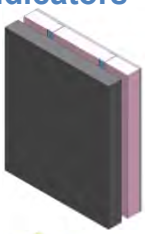

Slab Linear Transmittance[2]

R ft²·hr·°F / Btu (m² K / W)	U Btu/ft² ·hr ·°F (W/m² K)	ψ Btu/ft hr °F (W/m K)
R-6.2 (1.09)	0.161 (0.91)	0.286 (0.495)

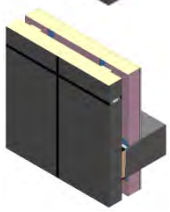

[2] Panel edges (caulked joints between panels) had negligible linear transmittance effects so values not presented

Temperature Indices

T_{i1}	0.05	Min T on concrete wall, between studs, away from slab
T_{i2}	0.23	Max T on concrete wall, at slot anchor
T_{i3}	0.73	Min T on floor, at gypsum and studs
T_{i4}	0.75	Min T on ceiling, at gypsum and studs

Detail 7.2.7

Precast Wall Assembly with 3 5/8″ x 1 5/8″ Steel Stud (16″ o.c) and Rigid Insulation Outboard of Studs – Intermediate Floor Intersection

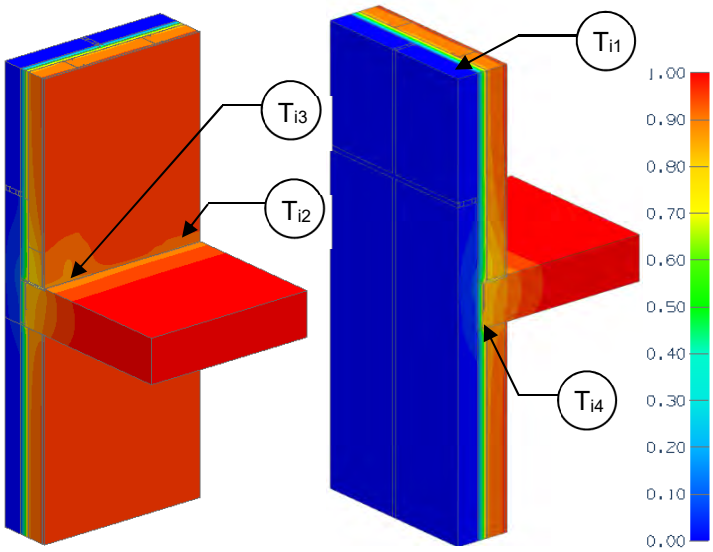

View from Interior View from Exterior

Thermal Performance Indicators

Assembly 1D (Nominal) R-Value	R_{1D}	Nominal thermal resistance of wall
Transmittance / Resistance without Anomaly	U_o, R_o	"clear wall" U- and R-value, without slab and anchor connections
Transmittance / Resistance	U, R	U- and R-values for overall assembly
Surface Temperature Index[1]	T_i	0 = exterior temperature 1 = interior temperature
Linear Transmittance	ψ	Incremental increase in transmittance per linear length of slab

[1]Assumptions and limitations for surface temperatures identified in ASHRAE 1365-RP

Nominal (1D) vs. Assembly Performance Indicators

Base Assembly – Wall

R_{1D} ft²·hr·°F / Btu (m² K / W)	R_o ft²·hr·°F / Btu (m² K / W)	U_o Btu/ft² ·hr ·°F (W/m² K)
R-13.0 (2.29)	R-12.9 (2.26)	0.078 (0.44)

Slab Linear Transmittance[2]

R ft²·hr·°F / Btu (m² K / W)	U Btu/ft² ·hr ·°F (W/m² K)	ψ Btu/ft hr °F (W/m K)
R-9.1 (1.60)	0.110 (0.63)	0.218 (0.377)

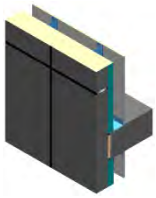

[2] Panel edges (caulked joints between panels) had negligible linear transmittance effects so values not presented

Temperature Indices

T_{i1}	0.04	Min T on concrete wall, between studs, away from slab
T_{i2}	0.31	Max T on concrete wall, at slot anchor connection
T_{i3}	0.80	Min T on floor, at gypsum and gravity anchor
T_{i4}	0.87	Min T on ceiling, at gypsum and studs

Detail 7.2.8

Precast Sandwich Panel Wall Assembly with 3 5/8″ x 1 5/8″ Steel Stud (16″ o.c.) – Intermediate Floor Intersection

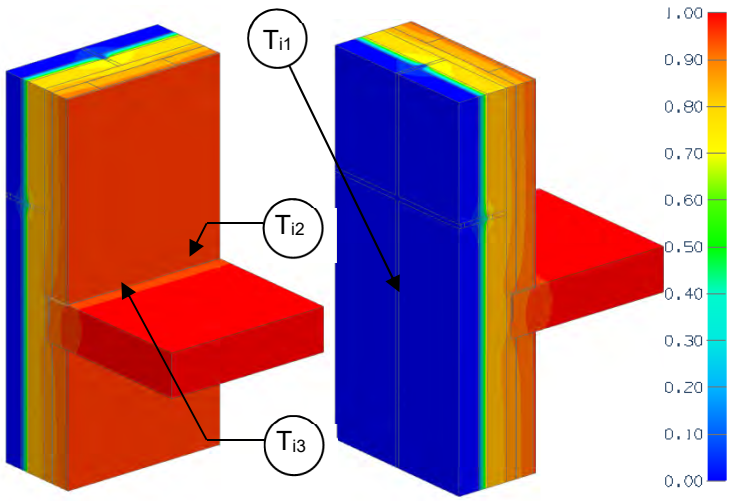

View from Interior View from Exterior

Thermal Performance Indicators

Assembly 1D (Nominal) R-Value	R_{1D}	R-3.9 (0.69 RSI) + sandwich panel insulation
Transmittance / Resistance without Anomaly	U_o, R_o	"clear wall" U- and R-value without concrete slab
Transmittance / Resistance	U_j, R_j, U_s, R_s	U and R values for: j = concrete wall with panel joint f = concrete wall panel joint + concrete slab
Surface Temperature Index[1]	T_i	0 = exterior temperature 1 = interior temperature
Linear Transmittance	ψ_j, ψ_s	Incremental increase in transmittance per linear length of: j = panel joint s = concrete slab

[1]Assumptions and limitations for surface temperatures identified in ASHRAE 1365-RP

Nominal (1D) vs. Assembly Performance Indicators

Base Assembly – Wall

R_{1D} ft²·hr·°F / Btu (m² K / W)	R_o ft²·hr·°F / Btu (m² K / W)	U_o Btu/ft² ·hr ·°F (W/m² K)
R-13.9 (2.45)	R-12.6 (2.22)	0.079 (0.45)

Panel Joint Linear Transmittance

R_j ft²·hr·°F / Btu (m² K / W)	U_j Btu/ft² ·hr ·°F (W/m² K)	ψ_j Btu/ft hr °F (W/m K)
R-11.7 (2.05)	0.086 (0.49)	0.026 (0.046)

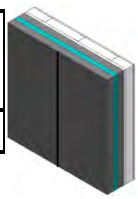

Slab Linear Transmittance

R_s ft²·hr·°F / Btu (m² K / W)	U_s Btu/ft² ·hr ·°F (W/m² K)	ψ_s Btu/ft hr °F (W/m K)
R-8.8 (1.54)	0.114 (0.65)	0.118 (0.205)

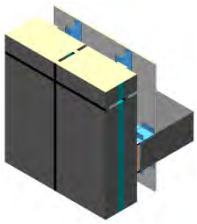

Temperature Indices

T_{i1}	0.73	Min T on interior concrete wall, at panel joints, at slab
T_{i2}	0.82	Max T on concrete wall, at slot anchor
T_{i3}	0.92	Min T in interior surface, at floor/gypsum intersection and anchor

Detail 7.2.9

Precast Sandwich Panel Wall Assembly with Concrete at Panel Perimeter and Steel Connectors at 24" o.c. – Intermediate Floor Intersection

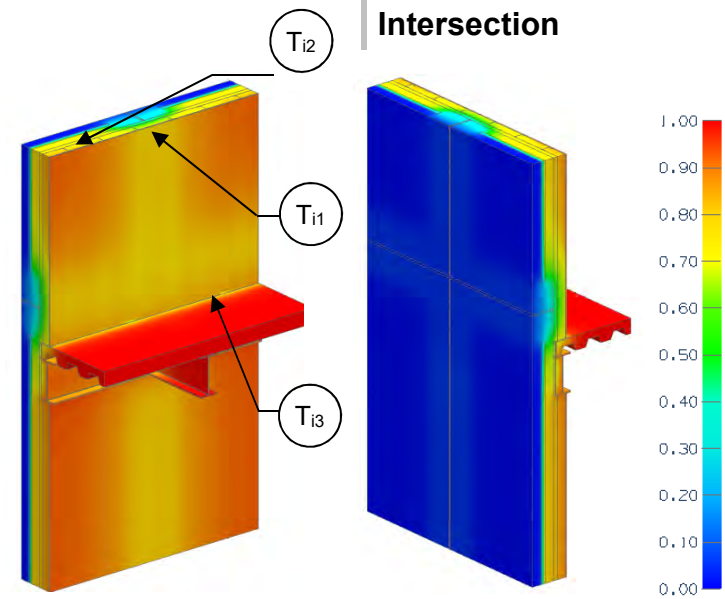

View from Interior View from Exterior

Thermal Performance Indicators

Assembly 1D (Nominal) R-Value	R_{1D}	R-3.9 (0.69 RSI) + sandwich panel insulation
Transmittance / Resistance without Anomaly	U_o, R_o	"clear wall" U- and R-value, without floor
Transmittance / Resistance	U_j, R_j, U_f, R_f	U and R values for: j = wall with panel joint f = concrete wall panel joint + floor
Surface Temperature Index[1]	T_i	0 = exterior temperature 1 = interior temperature
Linear Transmittance	ψ_j, ψ_f	Incremental increase in transmittance per linear length of: j = panel joint f = floor

[1]Assumptions and limitations for surface temperatures identified in ASHRAE 1365-RP

Nominal (1D) vs. Assembly Performance Indicators

Base Assembly - Wall

Sandwich Panel Insulation 1D R-Value (RSI)	R_{1D} ft²·hr·°F / Btu (m² K / W)	R_o ft²·hr·°F / Btu (m² K / W)	U_o Btu/ft² ·hr ·°F (W/m² K)
R-10 (1.76)	R-13.9 (2.45)	R-12.0 (2.11)	0.083 (0.47)

Panel Joint Linear Transmittance

R_j ft²·hr·°F / Btu (m² K / W)	U_j Btu/ft² ·hr ·°F (W/m² K)	ψ_j Btu/ft ·hr·°F (W/m K)
R-6.2 (1.10)	0.160 (0.91)	0.635 (1.130)

Floor Linear Transmittance

Sandwich Panel Insulation 1D R-Value (RSI)	R_f ft²·hr·°F / Btu (m² K / W)	U_f Btu/ft² ·hr ·°F (W/m² K)	ψ_f Btu/ft ·hr·°F (W/m K)
R-10 (1.76)	R-4.7 (0.83)	0.213 (1.21)	0.738 (1.277)

Temperature Indices

T_{i1}	0.31	Min T on sandwich panel, at intersection of concrete edges
T_{i2}	0.83	Max T on sandwich panel, at centre of panel away from concrete edges
T_{i3}	0.77	Min T on slab, at drywall intersection near slab angle

Detail 7.2.10

Precast Sandwich Panel Wall Assembly with Steel Connectors at 16" o.c. – Intermediate Floor Intersection

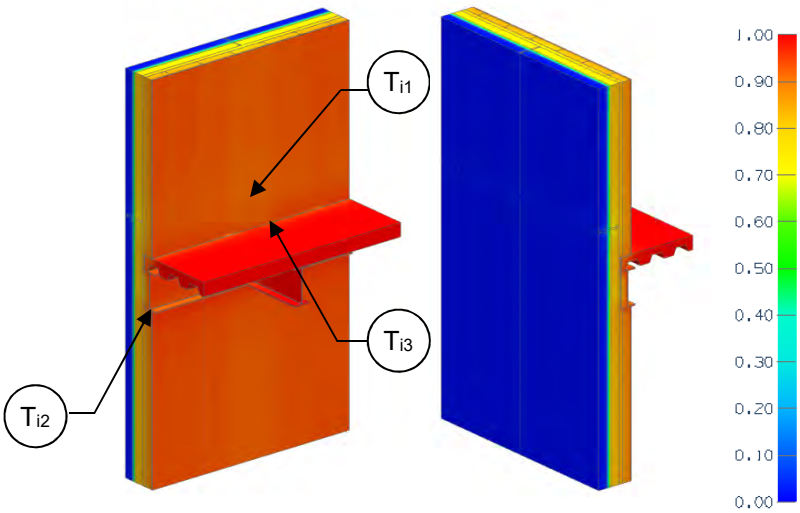

View from Interior View from Exterior

Thermal Performance Indicators

Assembly 1D (Nominal) R-Value	R_{1D}	R-3.9 (0.69 RSI) + sandwich panel insulation
Transmittance / Resistance without Anomaly	U_o, R_o	"clear wall" U- and R-value, without panel joints and floor
Transmittance / Resistance	U_j, R_j, U_f, R_f	U and R values for: j = concrete wall with panel joint f = concrete wall panel joint + floor
Surface Temperature Index[1]	T_i	0 = exterior temperature 1 = interior temperature
Linear Transmittance	ψ_j, ψ_f	Incremental increase in transmittance per linear length of: j = panel joint f = floor

[1]Assumptions and limitations for surface temperatures identified in ASHRAE 1365-RP

Nominal (1D) vs. Assembly Performance Indicators

Base Assembly - Wall

Sandwich Panel Insulation 1D R-Value (RSI)	R_{1D} ft²·hr·°F / Btu (m² K / W)	R_o ft²·hr·°F / Btu (m² K / W)	U_o Btu/ft² ·hr ·°F (W/m² K)
R-10 (1.76)	R-13.9 (2.45)	R-12.0 (2.11)	0.083 (0.47)

Panel Joint Linear Transmittance

R_j ft²·hr·°F / Btu (m² K / W)	U_j Btu/ft² ·hr ·°F (W/m² K)	ψ_j Btu/ft ·hr·°F (W/m K)
R-11.6 (2.03)	0.087 (0.49)	0.026 (0.046)

Floor Linear Transmittance

Sandwich Panel Insulation 1D R-Value (RSI)	R_f ft²·hr·°F / Btu (m² K / W)	U_f Btu/ft² ·hr ·°F (W/m² K)	ψ_f Btu/ft ·hr·°F (W/m K)
R-10 (1.76)	R-11.2 (1.97)	0.089 (0.51)	0.039 (0.067)

Temperature Indices

T_{i1}	0.77	Min T on sandwich panel, at corner of sandwich panel
T_{i2}	0.88	Max T on sandwich panel, at centre of panel along top track of bottom wall
T_{i3}	0.93	Min T on slab, at drywall intersection near steel slab angle

Detail 7.2.11

Precast Sandwich Panel Wall Assembly with Steel Connectors at 36" o.c. – Intermediate Floor Intersection

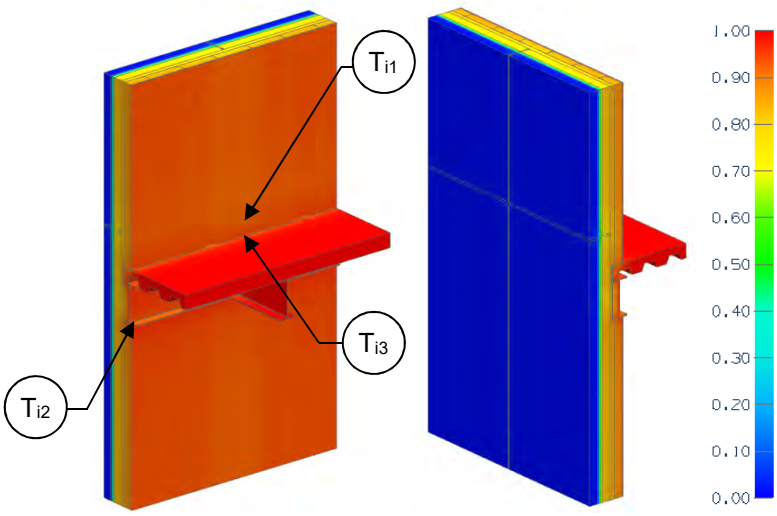

View from Interior View from Exterior

Thermal Performance Indicators

Assembly 1D (Nominal) R-Value	R_{1D}	R-3.9 (0.69 RSI) + sandwich panel insulation
Transmittance / Resistance without Anomaly	U_o, R_o	"clear wall" U- and R-value, without floor
Transmittance / Resistance	U_j, R_j, U_f, R_f	U and R values for: j = concrete wall with panel joint s = concrete wall panel joint + floor
Surface Temperature Index[1]	T_i	0 = exterior temperature 1 = interior temperature
Linear Transmittance	ψ_j, ψ_f	Incremental increase in transmittance per linear length of: j = panel joint f = floor

[1]Assumptions and limitations for surface temperatures identified in ASHRAE 1365-RP

Nominal (1D) vs. Assembly Performance Indicators

Base Assembly - Wall

Sandwich Panel Insulation 1D R-Value (RSI)	R_{1D} ft²·hr·°F / Btu (m² K / W)	R_o ft²·hr·°F / Btu (m² K / W)	U_o Btu/ft² ·hr ·°F (W/m² K)
R-10 (1.76)	R-13.9 (2.45)	R-12.6 (2.22)	0.079 (0.45)

Panel Joint Linear Transmittance

R_j ft²·hr·°F / Btu (m² K / W)	U_j Btu/ft² ·hr ·°F (W/m² K)	ψ_j Btu/ft ·hr·°F (W/m K)
R-12.0 (2.11)	0.084 (0.48)	0.036 (0.062)

Floor Linear Transmittance

Sandwich Panel Insulation 1D R-Value (RSI)	R_f ft²·hr·°F / Btu (m² K / W)	U_f Btu/ft² ·hr ·°F (W/m² K)	ψ_f Btu/ft ·hr·°F (W/m K)
R-10 (1.76)	R-11.4 (2.00)	0.088 (0.50)	0.062 (0.107)

Temperature Indices

T_{i1}	0.77	Min T on sandwich panel, at corner of sandwich panel
T_{i2}	0.88	Max T on sandwich panel, at centre of panel at top track of bottom wall
T_{i3}	0.93	Min T on slab, at drywall intersection near steel slab angle

Detail 7.2.12

Precast Sandwich Panel Wall Assembly with Steel Connectors at 48" o.c. – Intermediate Floor Intersection

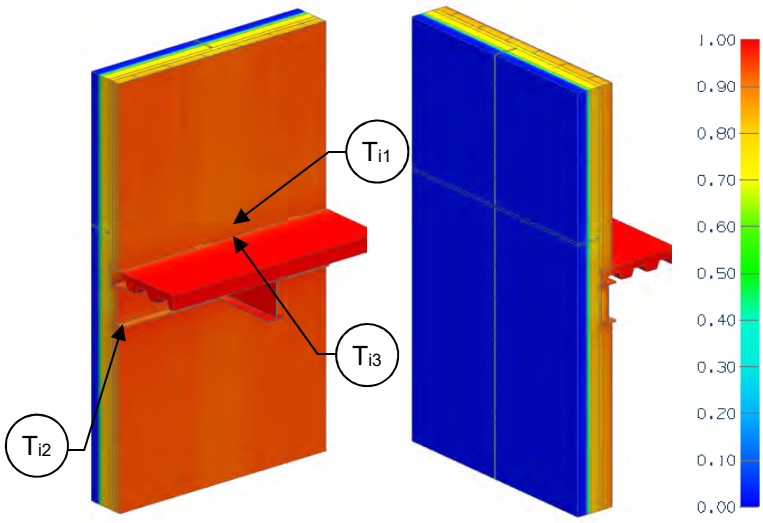

View from Interior View from Exterior

Thermal Performance Indicators

Assembly 1D (Nominal) R-Value	R_{1D}	R-3.9 (0.69 RSI) + sandwich panel insulation
Transmittance / Resistance without Anomaly	U_o, R_o	"clear wall" U- and R-value, without floor
Transmittance / Resistance	U_j, R_j, U_f, R_f	U and R values for: j = concrete wall with panel joint f = concrete wall panel joint + floor
Surface Temperature Index[1]	T_i	0 = exterior temperature 1 = interior temperature
Linear Transmittance	ψ_j, ψ_s	Incremental increase in transmittance per linear length of: j = panel joint f = floor

[1]Assumptions and limitations for surface temperatures identified in ASHRAE 1365-RP

Nominal (1D) vs. Assembly Performance Indicators

Base Assembly

Sandwich Panel Insulation 1D R-Value (RSI)	R_{1D} ft²·hr·°F / Btu (m² K / W)	R_o ft²·hr·°F / Btu (m² K / W)	U_o Btu/ft² ·hr ·°F (W/m² K)
R-10 (1.76)	R-13.9 (2.45)	R-12.6 (2.22)	0.079 (0.45)

Panel Joint Linear Transmittance

R_j ft²·hr·°F / Btu (m² K / W)	U_j Btu/ft² ·hr ·°F (W/m² K)	ψ_j Btu/ft ·hr·°F (W/m K)
R-12.1 (2.12)	0.083 (0.47)	0.030 (0.052)

Floor Linear Transmittance

Sandwich Panel Insulation 1D R-Value (RSI)	R_f ft²·hr·°F / Btu (m² K / W)	U_f Btu/ft² ·hr ·°F (W/m² K)	ψ_f Btu/ft ·hr·°F (W/m K)
R-10 (1.76)	R-11.6 (2.05)	0.086 (0.49)	0.043 (0.074)

Temperature Indices

T_{i1}	0.78	Min T on sandwich panel, at corner of sandwich panels
T_{i2}	0.88	Max T on sandwich panel, at centre of panel along top track of bottom wall
T_{i3}	0.93	Min T on slab, at drywall intersection near steel slab angle

Detail 7.2.13

Precast Sandwich Panel Wall Assembly with Fiber-Reinforced Composite Connectors at 16" o.c. – Intermediate Floor Intersection

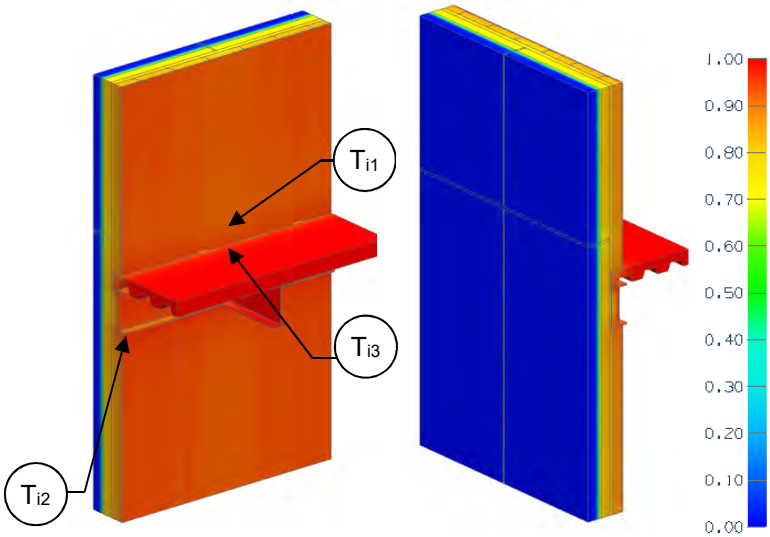

View from Interior View from Exterior

Thermal Performance Indicators

Assembly 1D (Nominal) R-Value	R_{1D}	R-3.9 (0.69 RSI) + sandwich panel insulation
Transmittance / Resistance without Anomaly	U_o, R_o	"clear wall" U- and R-value, without slab
Transmittance / Resistance	U, R	U and R-values for the assembly
Surface Temperature Index[1]	T_i	0 = exterior temperature 1 = interior temperature
Linear Transmittance	ψ	Incremental increase in transmittance per linear length steel framed floor

[1]Assumptions and limitations for surface temperatures identified in ASHRAE 1365-RP

Nominal (1D) vs. Assembly Performance Indicators

Sandwich Panel Insulation 1D R-Value (RSI)	R_{1D} ft²·hr·°F / Btu (m² K / W)	R_o ft²·hr·°F / Btu (m² K / W)	U_o Btu/ft² ·hr ·°F (W/m² K)	R ft²·hr·°F / Btu (m² K / W)	U Btu/ft² ·hr ·°F (W/m² K)	ψ Btu/ft ·hr·°F (W/m K)
R-10 (1.76)	R-13.9 (2.45)	R-11.3 (1.99)	0.088 (0.50)	R-11.2 (1.98)	0.089 (0.51)	0.011 (0.018)

Temperature Indices

T_{i1}	0.77	Min T on sandwich panel, at corner of sandwich panels
T_{i2}	0.88	Max T on sandwich panel, at centre of panel along top track of bottom wall
T_{i3}	0.93	Min T on slab, at drywall intersection near steel slab angle

Detail 7.2.14

Exterior Insulated Concrete Block Wall Assembly with Shelf Angle & Brick Ties Supporting Brick Veneer – Intermediate Floor Intersection

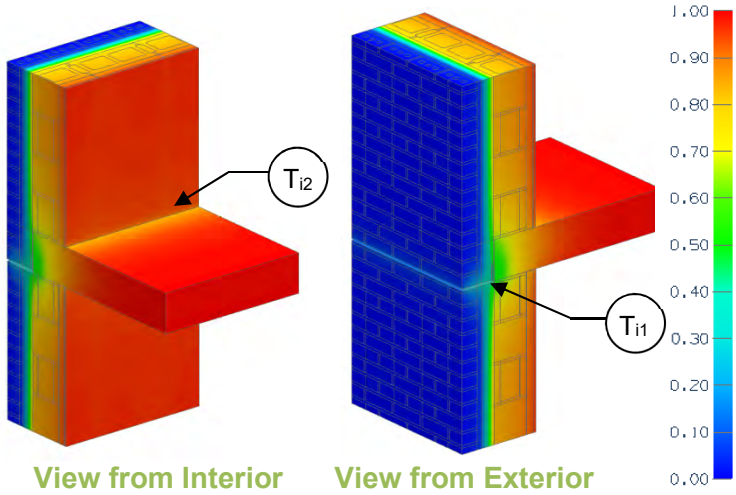

Thermal Performance Indicators

Assembly 1D (Nominal) R-Value	R_{1D}	R-5.6 (0.98 RSI) + exterior insulation
Transmittance / Resistance without Anomaly	U_o, R_o	"clear wall" U- and R-value without slab and shelf angle
Transmittance / Resistance	U, R	U- and R-values for overall assembly
Surface Temperature Index[1]	T_i	0 = exterior temperature 1 = interior temperature
Linear Transmittance	ψ	Incremental increase in transmittance per linear length of shelf angle and slab

[1]Assumptions and limitations for surface temperatures identified in ASHRAE 1365-RP

Nominal (1D) vs. Assembly Performance Indicators

Exterior Insulation 1D R-Value (RSI)	R_{1D} ft²·hr·°F / Btu (m² K / W)	R_o ft²·hr·°F / Btu (m² K / W)	U_o Btu/ft² ·hr ·°F (W/m² K)	R ft²·hr·°F / Btu (m² K / W)	U Btu/ft² ·hr ·°F (W/m² K)	ψ Btu/ft hr °F (W/m K)
R-5 (0.88)	R-10.6 (1.86)	R-10.4 (1.83)	0.096 (0.55)	R-7.4 (1.30)	0.135 (0.77)	0.236 (0.408)
R-10 (1.76)	R-15.6 (2.74)	R-14.2 (2.50)	0.070 (0.40)	R-8.8 (1.56)	0.113 (0.64)	0.258 (0.446)
R-15 (2.64)	R-20.6 (3.62)	R-17.8 (3.13)	0.056 (0.32)	R-9.9 (1.75)	0.101 (0.57)	0.268 (0.464)
R-20 (3.52)	R-25.6 (4.50)	R-20.8 (3.66)	0.048 (0.27)	R-10.8 (1.90)	0.093 (0.53)	0.270 (0.467)
R-25 (4.40)	R-30.6 (5.38)	R-23.7 (4.17)	0.042 (0.24)	R-11.5 (2.03)	0.087 (0.49)	0.268 (0.463)

Temperature Indices

	R5	R15	R25	
T_{i1}	0.47	0.51	0.57	Min T on exterior face of concrete blocks at air-filled blocks, at bottom of slab
T_{i2}	0.82	0.84	0.86	Min T on interior surfaces, at floor/gypsum intersection, at studs

Detail 7.2.15

Exterior Insulated Concrete Block Wall Assembly with Stand-Off Shelf Angle & Brick Ties Supporting Brick Veneer – Intermediate Floor Intersection

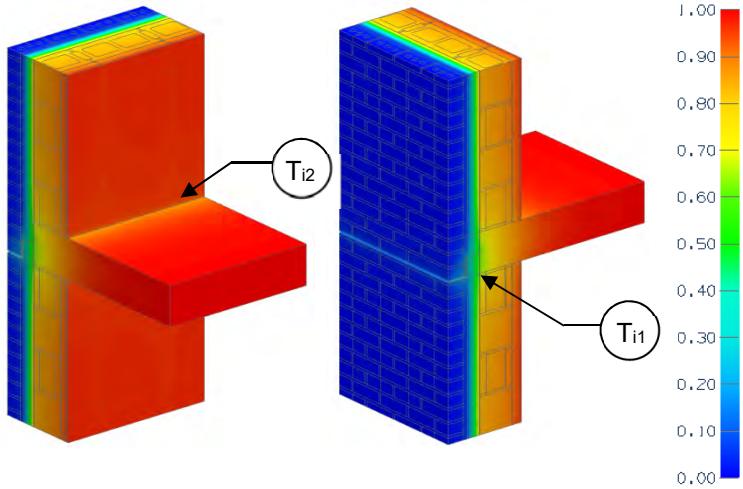

View from Interior View from Exterior

Thermal Performance Indicators

Assembly 1D (Nominal) R-Value	R_{1D}	R- 5.6 (0.98 RSI) + exterior insulation
Transmittance / Resistance without Anomaly	U_o, R_o	"clear wall" U- and R-value without slab and shelf angle
Transmittance / Resistance	U, R	U- and R-values for overall assembly
Surface Temperature Index[1]	T_i	0 = exterior temperature 1 = interior temperature
Linear Transmittance	ψ	Incremental increase in transmittance per linear length of shelf angle and slab

[1]Assumptions and limitations for surface temperatures identified in ASHRAE 1365-RP

Nominal (1D) vs. Assembly Performance Indicators

Exterior Insulation 1D R-Value (RSI)	R_{1D} ft²·hr·°F / Btu (m² K / W)	R_o ft²·hr·°F / Btu (m² K / W)	U_o Btu/ft² ·hr ·°F (W/m² K)	R ft²·hr·°F / Btu (m² K / W)	U Btu/ft² ·hr ·°F (W/m² K)	ψ Btu/ft hr °F (W/m K)
R-5 (0.88)	R-10.6 (1.86)	R-10.4 (1.83)	0.096 (0.55)	R-8.1 (1.42)	0.124 (0.70)	0.167 (0.289)
R-10 (1.76)	R-15.6 (2.74)	R-14.2 (2.50)	0.070 (0.40)	R-9.9 (1.74)	0.101 (0.57)	0.186 (0.322)
R-15 (2.64)	R-20.6 (3.62)	R-17.8 (3.13)	0.056 (0.32)	R-11.5 (2.02)	0.087 (0.49)	0.186 (0.322)
R-20 (3.52)	R-25.6 (4.50)	R-20.8 (3.66)	0.048 (0.27)	R-12.9 (2.27)	0.078 (0.44)	0.178 (0.307)
R-25 (4.40)	R-30.6 (5.38)	R-23.7 (4.17)	0.042 (0.24)	R-14.3 (2.51)	0.070 (0.40)	0.168 (0.290)

Temperature Indices

	R5	R15	R25	
T_{i1}	0.54	0.58	0.64	Min T on exterior face of concrete blocks, at air-filled blocks, at bottom of slab
T_{i2}	0.84	0.87	0.89	Min T on interior surfaces, on floor/gypsum intersection, at studs

Detail 7.2.16

Exterior Insulated Concrete Block Wall Assembly with Masonry Ties Supporting Brick Veneer – Intermediate Floor Intersection at Balcony

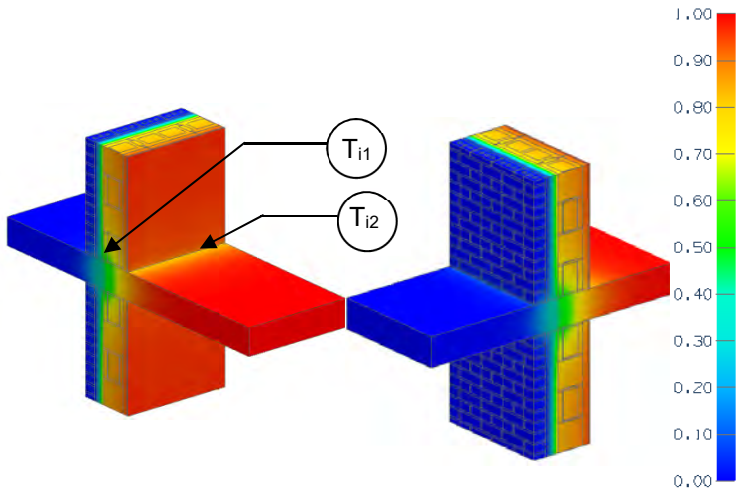

View from Interior View from Exterior

Thermal Performance Indicators

Assembly 1D (Nominal) R-Value	R_{1D}	R- 5.6 (0.98 RSI) + exterior insulation
Transmittance / Resistance without Anomaly	U_o R_o	"clear wall" U- and R-value without slab
Transmittance / Resistance	U, R	U- and R-values for overall assembly
Surface Temperature Index[1]	T_i	0 = exterior temperature 1 = interior temperature
Linear Transmittance	ψ	Incremental increase in transmittance per linear length of slab

[1]Assumptions and limitations for surface temperatures identified in ASHRAE 1365-RP

Nominal (1D) vs. Assembly Performance Indicators

Exterior Insulation 1D R-Value (RSI)	R_{1D} ft²·hr·°F / Btu (m² K / W)	R_o ft²·hr·°F / Btu (m² K / W)	U_o Btu/ft² ·hr ·°F (W/m² K)	R ft²·hr·°F / Btu (m² K / W)	U Btu/ft² ·hr ·°F (W/m² K)	ψ Btu/ft hr °F (W/m K)
R-5 (0.88)	R-10.6 (1.86)	R-10.4 (1.83)	0.096 (0.55)	R-6.64 (1.17)	0.151 (0.86)	0.327 (0.565)
R-10 (1.76)	R-15.6 (2.74)	R-14.2 (2.50)	0.070 (0.40)	R-7.77 (1.37)	0.129 (0.73)	0.350 (0.606)
R-15 (2.64)	R-20.6 (3.62)	R-17.8 (3.13)	0.056 (0.32)	R-8.71 (1.53)	0.155 (0.65)	0.352 (0.609)
R-20 (3.52)	R-25.6 (4.50)	R-20.8 (3.66)	0.048 (0.27)	R-9.43 (1.66)	0.106 (0.60)	0.348 (0.603)
R-25 (4.40)	R-30.6 (5.38)	R-23.7 (4.17)	0.042 (0.24)	R-10.43 (1.84)	0.096 (0.54)	0.322 (0.558)

Temperature Indices

	R5	R15	R25	
T_{i1}	0.42	0.49	0.55	Min T on exterior face of concrete blocks, at top of slab, at air filled blocks
T_{i2}	0.78	0.82	0.83	Min T on interior surfaces, at floor/gypsum intersection, at studs

Detail 7.2.17

Exterior Insulated Concrete Block Wall Assembly with Masonry Ties Supporting Brick Veneer – Angle Supported Slab & Intermediate Floor Intersection

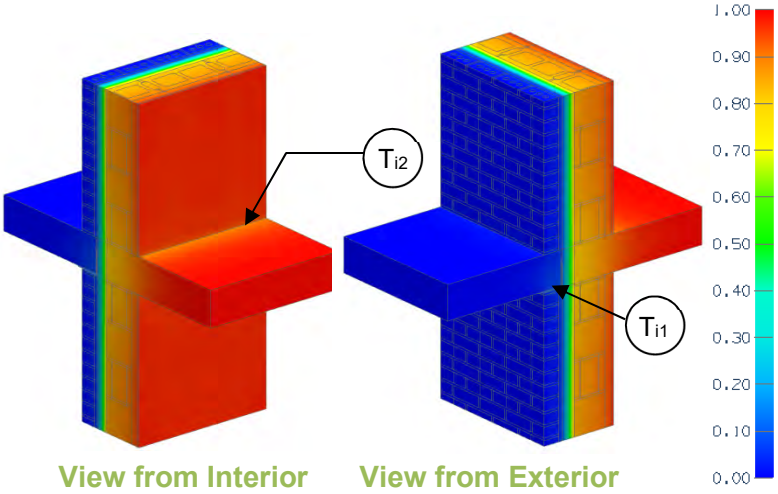

Thermal Performance Indicators

Assembly 1D (Nominal) R-Value	R_{1D}	R- 5.6 (0.98 RSI) + exterior insulation
Transmittance / Resistance without Anomaly	U_o, R_o	"clear wall" U- and R-value without balcony slab
Transmittance / Resistance	U, R	U- and R-values for overall assembly
Surface Temperature Index[1]	T_i	0 = exterior temperature 1 = interior temperature
Linear Transmittance	ψ	Incremental increase in transmittance per linear length of slab

[1]Assumptions and limitations for surface temperatures identified in ASHRAE 1365-RP

Nominal (1D) vs. Assembly Performance Indicators

Exterior Insulation 1D R-Value (RSI)	R_{1D} ft²·hr·°F / Btu (m² K / W)	R_o ft²·hr·°F / Btu (m² K / W)	U_o Btu/ft² ·hr ·°F (W/m² K)	R ft²·hr·°F / Btu (m² K / W)	U Btu/ft² ·hr ·°F (W/m² K)	ψ Btu/ft hr °F (W/m K)
R-5 (0.88)	R-10.6 (1.86)	R-10.4 (1.83)	0.096 (0.55)	R-8.4 (1.47)	0.120 (0.68)	0.140 (0.243)
R-15 (2.64)	R-20.6 (3.62)	R-17.8 (3.13)	0.056 (0.32)	R-13.0 (2.28)	0.077 (0.44)	0.126 (0.218)
R-25 (4.40)	R-30.6 (5.38)	R-23.7 (4.17)	0.042 (0.24)	R-16.2 (2.84)	0.062 (0.35)	0.118 (0.205)

Temperature Indices

	R5	R15	R25	
T_{i1}	0.55	0.65	0.70	Min T on exterior face of concrete blocks, at bottom of slab, at slab angle supports
T_{i2}	0.85	0.89	0.91	Min T on interior surfaces, at floor/gypsum intersection, at studs

Detail 7.2.18

Exterior Insulated Concrete Block Wall Assembly with Masonry Ties Supporting Brick Veneer – Intermediate Floor Intersection at Balcony

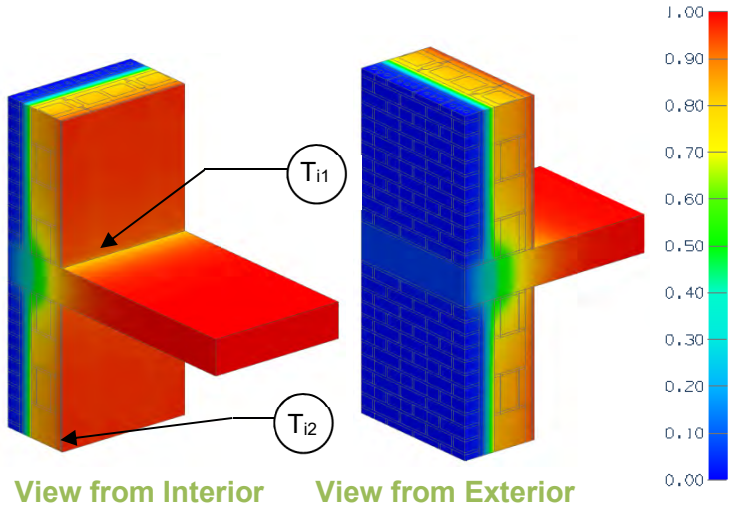

Thermal Performance Indicators

Assembly 1D (Nominal) R-Value	R_{1D}	R- 5.6 (0.98 RSI) + exterior insulation
Transmittance / Resistance without Anomaly	U_o, R_o	"clear wall" U- and R-value without slab
Transmittance / Resistance	U, R	U- and R-values for overall assembly
Surface Temperature Index[1]	T_i	0 = exterior temperature 1 = interior temperature
Linear Transmittance	ψ	Incremental increase in transmittance per linear length of slab

[1]Assumptions and limitations for surface temperatures identified in ASHRAE 1365-RP

Nominal (1D) vs. Assembly Performance Indicators

Exterior Insulation 1D R-Value (RSI)	R_{1D} ft²·hr·°F / Btu (m² K / W)	R_o ft²·hr·°F / Btu (m² K / W)	U_o Btu/ft² ·hr ·°F (W/m² K)	R ft²·hr·°F / Btu (m² K / W)	U Btu/ft² ·hr ·°F (W/m² K)	ψ Btu/ft hr °F (W/m K)
R-5 (0.88)	R-10.6 (1.86)	R-10.4 (1.83)	0.096 (0.55)	R-6.5 (1.14)	0.154 (0.88)	0.348 (0.602)
R-10 (1.76)	R-15.6 (2.74)	R-14.2 (2.50)	0.070 (0.40)	R-7.6 (1.34)	0.131 (0.75)	0.367 (0.636)
R-15 (2.64)	R-20.6 (3.62)	R-17.8 (3.13)	0.056 (0.32)	R-8.5 (1.50)	0.117 (0.67)	0.368 (0.636)
R-20 (3.52)	R-25.6 (4.50)	R-20.8 (3.66)	0.048 (0.27)	R-9.2 (1.61)	0.109 (0.62)	0.367 (0.636)
R-25 (4.40)	R-30.6 (5.38)	R-23.7 (4.17)	0.042 (0.24)	R-9.9 (1.75)	0.101 (0.57)	0.351 (0.607)

Temperature Indices

	R5	R15	R25	
T_{i1}	0.39	0.48	0.53	Min T on exterior face of concrete blocks, at top of slab, at air filled blocks
T_{i2}	0.77	0.81	0.83	Min T on interior surfaces, at floor/gypsum intersection, at studs

Detail 7.2.19

Exterior Insulated Concrete Block Wall Assembly with Thermally Broken Shelf Angle & Brick Ties Supporting Brick Veneer – Slab Intersection

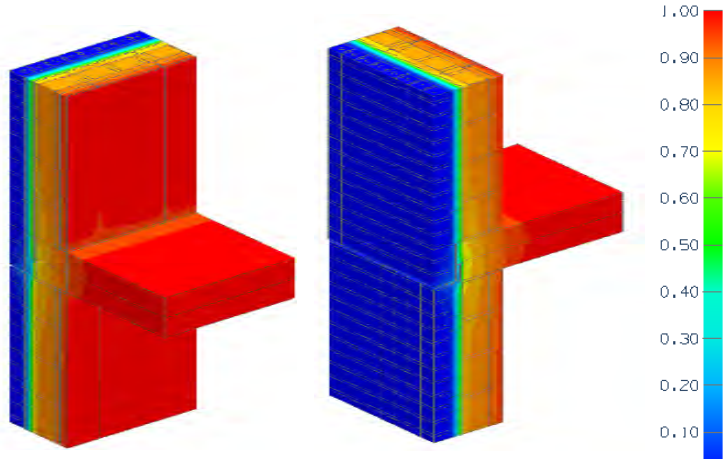

View from Interior View from Exterior

Thermal Performance Indicators

Assembly 1D (Nominal) R-Value	R_{1D}	R-5.6 (0.98 RSI) + exterior insulation
Transmittance / Resistance without Anomaly	U_o, R_o	"clear wall" U- and R-value without slab and shelf angle
Transmittance / Resistance	U, R	U- and R-values for overall assembly
Surface Temperature Index	T_i	0 = exterior temperature 1 = interior temperature
Linear Transmittance	ψ	Incremental increase in transmittance per linear length of slab with shelf angle

[1]Assumptions and limitations for surface temperatures identified in ASHRAE 1365-RP

Scenario

Scenario	Flashing and Shelf Angle
1	Self-Adhered Membrane Flashing with Steel Shelf Angle and Bolts
2	Self-Adhered Membrane Flashing with Stainless Steel Shelf Angle and Bolts

Nominal (1D) vs. Assembly Performance Indicators

Scenario	Exterior Insulation 1D R-Value (RSI)	R_{1D} ft²·hr·°F / Btu (m² K / W)	R_o ft²·hr·°F / Btu (m² K / W)	U_o Btu/ft² ·hr ·°F (W/m² K)	R ft²·hr·°F / Btu (m² K / W)	U Btu/ft² ·hr ·°F (W/m² K)	ψ Btu/ft hr °F (W/m K)
1	R-15 (2.64)	R-20.6 (3.62)	R-17.8 (3.13)	0.056 (0.32)	R-13.6 (2.39)	0.074 (0.42)	0.108 (0.186)
2	R-15 (2.64)	R-20.6 (3.62)	R-17.8 (3.13)	0.056 (0.32)	R-14.4 (2.53)	0.070 (0.39)	0.082 (0.141)

Detail 7.2.20

Interior Insulated Concrete Mass Wall with 1 5/8" x 1 5/8" Steel Studs (16" o.c.) Supporting Interior Finish – Isokorb Rutherma DF Thermally Broken Concrete Intermediate Floor Intersection

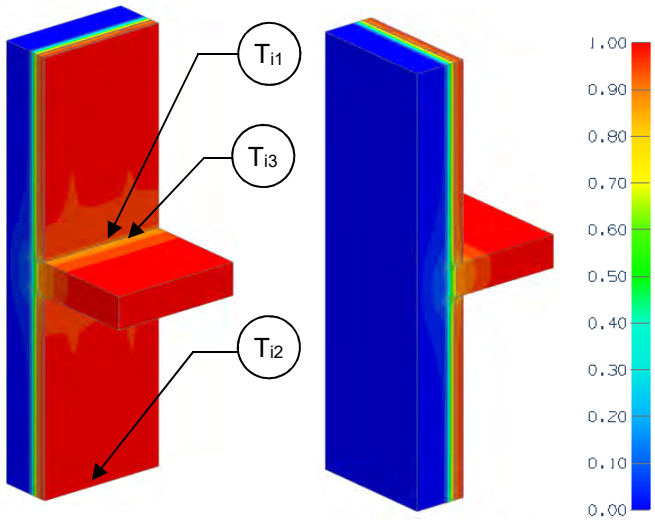

View from Interior **View from Exterior**

Thermal Performance Indicators

Assembly 1D (Nominal) R-Value	R_{1D}	R-2.9 (0.51 RSI) + interior insulation
Transmittance / Resistance without Anomaly	U_o, R_o	"clear wall" U- and R-value, without slab
Transmittance / Resistance	U, R	U and R-values for the assembly
Surface Temperature Index[1]	T_i	0 = exterior temperature 1 = interior temperature
Linear Transmittance	ψ	Incremental increase in transmittance per linear length of slab

[1]Assumptions and limitations for surface temperatures identified in ASHRAE 1365-RP

Nominal (1D) vs. Assembly Performance Indicators

Interior Insulation 1D R-Value (RSI)	R_{1D} ft²·hr·°F / Btu (m² K / W)	R_o ft²·hr·°F / Btu (m² K / W)	U_o Btu/ft² ·hr ·°F (W/m² K)	R ft²·hr·°F / Btu (m² K / W)	U Btu/ft² ·hr ·°F (W/m² K)	ψ Btu/ft hr °F (W/m K)
R-12.5 (1.76)	R-15.4 (2.71)	R-15.4 (2.70)	0.065 (0.37)	R-10.8 (1.90)	0.093 (0.53)	0.239 (0.414)

Temperature Indices

T_{i1}	0.85	Min T on insulation away from slab, between studs
T_{i2}	0.89	Max T on insulation away from slab, at studs
T_{i3}	0.75	Min T on slab exposed to interior air, at insulation between studs

Detail 7.2.21

Highly Insulated Precast Concrete Sandwich Panel Wall Assembly – Intermediate Floor Intersection with Inner Wythe Supported by Concrete Floor

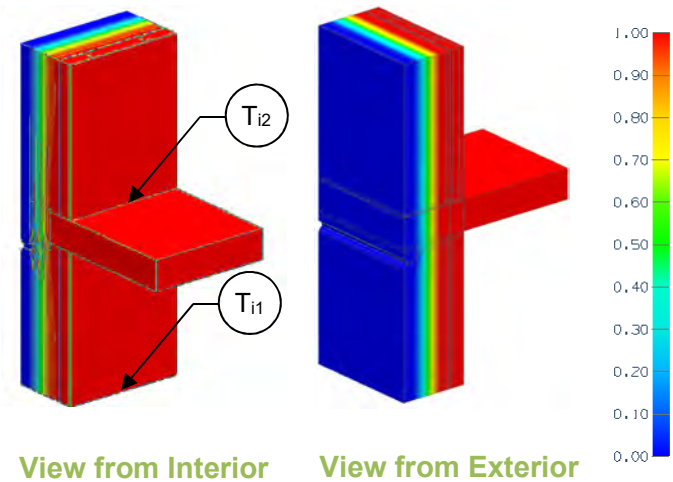

View from Interior View from Exterior

Thermal Performance Indicators

Assembly 1D (Nominal) R-Value	R_{1D}	R-2.76 (0.49 RSI) + insulation
Transmittance / Resistance without Anomaly	U_o, R_o	"clear field" U- and R-value
Transmittance / Resistance	U, R	U- and R-values for the overall assembly
Linear Transmittance	Ψ	Incremental increase in transmittance for intermediate slab

Nominal (1D) vs. Assembly Performance Indicators

Base Assembly – Wall

Wall Insulation R-Value/in	Wall Insulation 1D R-Value (RSI)	R_{1D} ft²·hr·ºF / Btu (m² K / W)	R_o ft²·hr·ºF / Btu (m² K / W)	U_o Btu/ft² ·hr ·ºF (W/m² K)
5	R-40 (7.04)	R-42.8 (7.53)	R-42.3 (7.45)	0.024 (0.134)
6	R-48 (8.45)	R-50.8 (8.94)	R-50.3 (8.86)	0.020 (0.113)
7	R-56 (9.86)	R-58.8 (10.35)	R-58.3 (10.27)	0.017 (0.097)

Slab Linear Transmittance

Wall Insulation R-Value/in	Wall Insulation 1D R-Value (RSI)	R ft²·hr·ºF / Btu (m² K / W)	U Btu/ft² ·hr ·ºF (W/m² K)	Ψ Btu/ft·hr·ºF (W/mK)
5	R-42.8 (7.53)	R-41.4 (7.30)	0.024 (0.137)	0.0036 (0.0061)
6	R-50.8 (8.94)	R-47.9 (8.44)	0.021 (0.118)	0.0071 (0.0123)
6*	R-50.8 (8.94)	R-48.3 (8.52)	0.021 (0.117)	0.0057 (0.0099)
7	R-58.8 (10.35)	R-54.0 (9.52)	0.019 (0.105)	0.0098 (0.0169)

*With additional R-4 aerogel insulation at slab edge detail

Temperature Indices

	R42.8	R50.8	R50.8*	R58.8	
T_{i1}	0.95	0.96	0.96	0.97	Min T on interior precast sandwich panel away from slab, between studs
T_{i2}	0.96	0.97	0.97	0.97	Min T on slab exposed to interior air, at interior precast sandwich panel, between studs

*With additional R-4 aerogel insulation at slab edge detail

Detail 7.2.22

Owens Corning Exterior Insulated Concrete Block Wall Assembly with Shelf Angle and Heckmann Pos-I-Tie Veneer Anchoring System Supporting Brick Veneer – Intermediate Floor Intersection

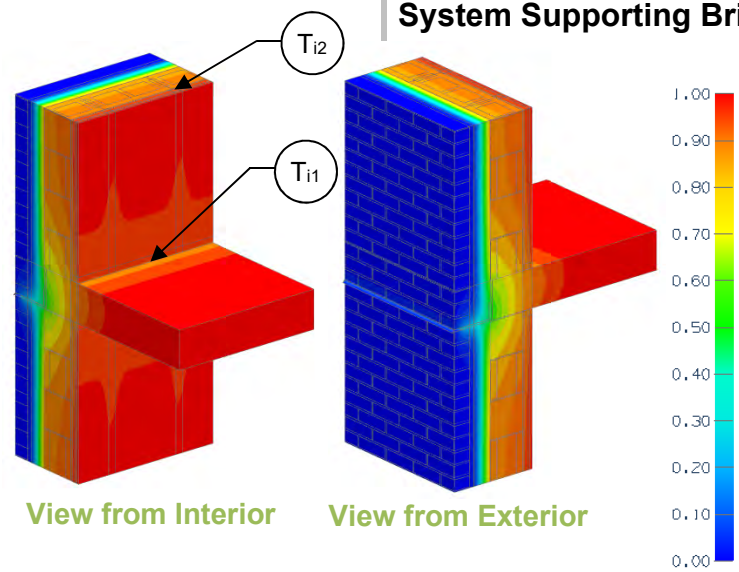

View from Interior View from Exterior

Thermal Performance Indicators

Assembly 1D (Nominal) R-Value	R_{1D}	R-5.6 (0.99 RSI) + exterior insulation
Transmittance / Resistance without Anomaly	U_o, R_o	"clear wall" U- and R-value without slab and shelf angle
Transmittance / Resistance	U, R	U- and R-values for overall assembly
Surface Temperature Index[1]	T_i	0 = exterior temperature 1 = interior temperature
Linear Transmittance	ψ	Incremental increase in transmittance per linear length of shelf angle and slab

[1]Assumptions and limitations for surface temperatures identified in ASHRAE 1365-RP

Nominal (1D) vs. Assembly Performance Indicators

Exterior Insulation 1D R-Value (RSI)	R_{1D} ft²·hr·°F / Btu (m² K / W)	R_o ft²·hr·°F / Btu (m² K / W)	U_o Btu/ft² ·hr ·°F (W/m² K)	R ft²·hr·°F / Btu (m² K / W)	U Btu/ft² ·hr ·°F (W/m² K)	ψ Btu/ft hr °F (W/m K)
R-10.0 (1.76)	R-15.6 (2.75)	R-13.4 (2.36)	0.075 (0.42)	R-8.3 (1.46)	0.121 (0.69)	0.277 (0.480)
R-20.0 (3.52)	R-25.6 (4.51)	R-20.0 (3.52)	0.050 (0.28)	R-10.1 (1.78)	0.099 (0.56)	0.292 (0.506)

Temperature Indices

	R10	R20	
T_{i1}	0.77	0.80	Min T on slab exposed to interior air, between studs
T_{i2}	0.85	0.86	Max T on concrete block away from slab, at studs

Detail 7.2.23

Owens Corning Exterior Insulated Concrete Block Wall Assembly with Stainless Steel Stand-off Shelf Angle and Heckmann Pos-I-Tie Veneer Anchoring System Supporting Brick Veneer – Intermediate Floor Intersection

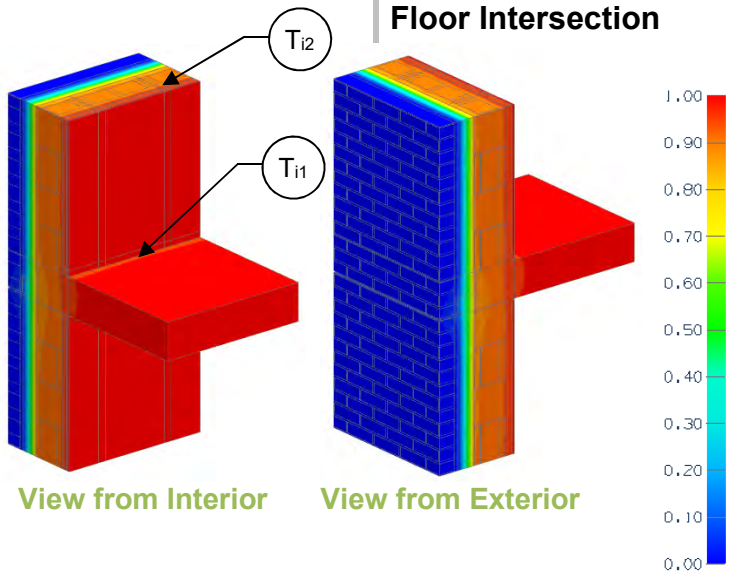

View from Interior View from Exterior

Thermal Performance Indicators

Assembly 1D (Nominal) R-Value	R_{1D}	R-5.6 (0.99 RSI) + exterior insulation
Transmittance / Resistance without Anomaly	U_o, R_o	"clear wall" U- and R-value without slab and shelf angle
Transmittance / Resistance	U, R	U- and R-values for overall assembly
Surface Temperature Index[1]	T_i	0 = exterior temperature 1 = interior temperature
Linear Transmittance	ψ	Incremental increase in transmittance per linear length of shelf angle and slab

[1]Assumptions and limitations for surface temperatures identified in ASHRAE 1365-RP

Nominal (1D) vs. Assembly Performance Indicators

Exterior Insulation 1D R-Value (RSI)	R_{1D} ft²·hr·°F / Btu (m² K / W)	R_o ft²·hr·°F / Btu (m² K / W)	U_o Btu/ft² ·hr ·°F (W/m² K)	R ft²·hr·°F / Btu (m² K / W)	U Btu/ft² ·hr ·°F (W/m² K)	ψ Btu/ft hr °F (W/m K)
R-10.0 (1.76)	R-15.6 (2.75)	R-13.4 (2.36)	0.075 (0.42)	R-11.7 (2.06)	0.085 (0.49)	0.064 (0.112)
R-20.0 (3.52)	R-25.6 (4.51)	R-20.0 (3.52)	0.050 (0.28)	R-16.9 (2.98)	0.059 (0.34)	0.054 (0.093)

Temperature Indices

	R10	R20	
T_{i1}	0.85	0.90	Min T on slab exposed to interior air, between studs
T_{i2}	0.88	0.92	Max T on concrete block away from slab, at studs

Detail 7.3.1

Exterior Insulated Concrete Drained EIFS Wall Assembly – Window and Intermediate Floor Intersection

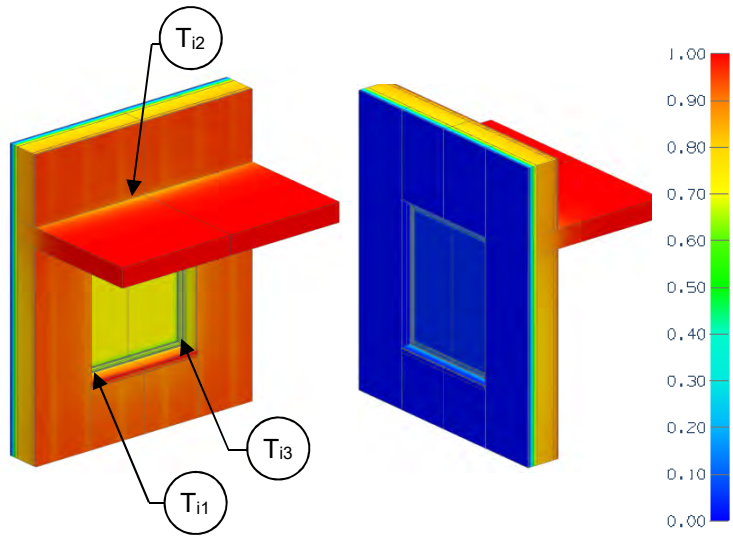

View from Interior View from Exterior

Thermal Performance Indicators

Assembly 1D (Nominal) R-Value	R_{1D}	R-3.0 (0.53 RSI) + exterior insulation
Transmittance / Resistance without Anomaly	U_w, R_w, U_g	"clear wall" U- and R-value: w = wall without slab g = glazing
Transmittance / Resistance	U_s, R_s, U_t, R_t	U and R-values for s = wall + slab t = combined wall + slab + window
Surface Temperature Index[1]	T_i	0 = exterior temperature 1 = interior temperature
Linear Transmittance	ψ_s, ψ_g	Incremental increase in transmittance per linear length of: s = slab g = glazing transition

[1]Assumptions and limitations for surface temperatures identified in ASHRAE 1365-RP

Nominal (1D) vs. Assembly Performance Indicators

Base Assembly – Concrete Clear Wall

Exterior Insulation 1D R-Value (RSI)	R_{1D} ft²·hr·°F / Btu (m² K / W)	R_w ft²·hr·°F / Btu (m² K / W)	U_w Btu/ft² ·hr ·°F (W/m² K)
R-15 (2.64)	R-18.0 (3.17)	R-17.6 (3.10)	0.057 (0.32)

Base Assembly - Glazing

$U_{centre\ of\ glazing}$ Btu/ft² ·hr ·°F (W/m² K)	U_g Btu/ft² ·hr ·°F (W/m² K)
0.321 (1.82)	0.400 (2.27)

Slab Linear Transmittance

Exterior Insulation 1D R-Value (RSI)	R_s ft²·hr·°F / Btu (m² K / W)	U_s Btu/ft² ·hr ·°F (W/m² K)	ψ_s Btu/ft² ·hr ·°F (W/m² K)
R-15 (2.64)	R-17.1 (3.02)	0.058 (0.33)	0.013 (0.023)

Window Transition Linear Transmittance

R_t ft²·hr·°F / Btu (m² K / W)	U_t Btu/ft² ·hr ·°F (W/m² K)	ψ_g[2] Btu/ft hr °F (W/m K)
R-5.6 (0.98)	0.179 (1.02)	0.177 (0.307)

Temperature Indices

T_{i1}	0.73	Min T on concrete interior surface, below window sill between studs
T_{i2}	0.89	Max T on concrete, at floor slab intersection away from window
T_{i3}	0.60	Min T on window frame, at corner of glass

[2]For the linear transmittance, use the window perimeter

Detail 7.3.2

Interior Insulated Concrete Mass Wall with 1 5/8" x 1 5/8" Steel Studs (16" o.c.) Supporting Interior Finish – Window & Intermediate Floor Intersection

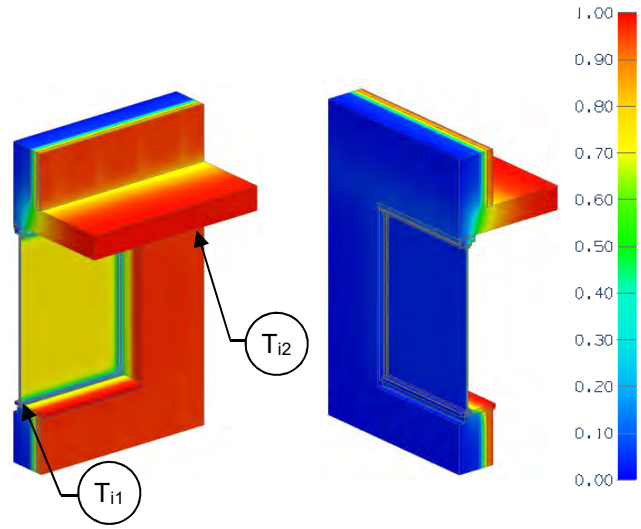

View from Interior View from Exterior

Thermal Performance Indicators

Assembly 1D (Nominal) R-Value	R_{1D}	R-2.9 (0.51 RSI) + interior insulation
Transmittance / Resistance without Anomaly	U_w, R_w, U_g	"clear wall" U- and R-value: w = concrete wall without slab g = glazing
Transmittance / Resistance	U_s, R_s, U_t, R_t	U and R-values for: s = wall + slab t = combined wall + slab + window
Surface Temperature Index[1]	T_i	0 = exterior temperature 1 = interior temperature
Linear Transmittance	ψ_s, ψ_g	Incremental increase in transmittance per linear length of: s = slab g = glazing transition

[1]Assumptions and limitations for surface temperatures identified in ASHRAE 1365-RP

Nominal (1D) vs. Assembly Performance Indicators

Base Assembly – Concrete Clear Wall

Interior Insulation 1D R-Value (RSI)	R_{1D} ft²·hr·°F / Btu (m² K / W)	R_w ft²·hr·°F / Btu (m² K / W)	U_w Btu/ft² ·hr ·°F (W/m² K)
R-10 (1.76)	R-12.9 (2.27)	R-12.9 (2.26)	0.078 (0.44)
R-15 (2.64)	R-17.9 (3.15)	R-17.9 (3.14)	0.056 (0.32)

Slab Linear Transmittance

R_s ft²·hr·°F / Btu (m² K / W)	U_s Btu/ft² ·hr ·°F (W/m² K)	ψ_s Btu/ft² ·hr ·°F (W/m² K)
R-7.3 (1.29)	0.137 (0.78)	0.514 (0.889)
R-8.4 (1.49)	0.119 (0.647)	0.545 (0.943)

Window Transition Linear Transmittance

Interior Insulation 1D R-Value (RSI)	Without Steel Sheet Connected to Studs			With Steel Sheet Connected to Studs		
	R_t ft²·hr·°F / Btu (m² K / W)	U_t Btu/ft² ·hr ·°F (W/m² K)	ψ_g[2] Btu/ft ·hr·°F (W/m K)	R_t ft²·hr·°F / Btu (m² K / W)	U_t Btu/ft² ·hr ·°F (W/m² K)	ψ_g[2] Btu/ft ·hr·°F (W/m K)
R-10 (1.76)	R-3.5 (0.62)	0.285 (1.62)	0.144 (0.248)	R-3.4 (0.6)	0.292 (1.66)	0.170 (0.294)
R-15 (2.64)	R-3.7 (0.65)	0.272 (1.54)	0.158 (0.273)	R-3.6 (0.63)	0.279 (1.58)	0.186 (0.322)

[2]For the linear transmittance, use the window perimeter

Temperature Indices

	Without Sheet		With Sheet		
	R10	R15	R10	R15	
T_{i1}	0.24	0.24	0.29	0.28	Min T on window frame, at bottom middle of glazing
T_{i2}	0.07	0.05	0.07	0.05	Min T on concrete, away from window slab and studs

Base Assembly - Glazing

$U_{centre\ of\ glass}$ Btu/ft² ·hr ·°F (W/m² K)	U_g Btu/ft² ·hr ·°F (W/m² K)
0.321 (1.82)	0.400 (2.27)

Detail 7.3.3

Interior Insulated Concrete Mass Wall with 1 5/8” x 1 5/8” Steel Studs (16” o.c.) Supporting Interior Finish – Window & Projected Slab Intersection

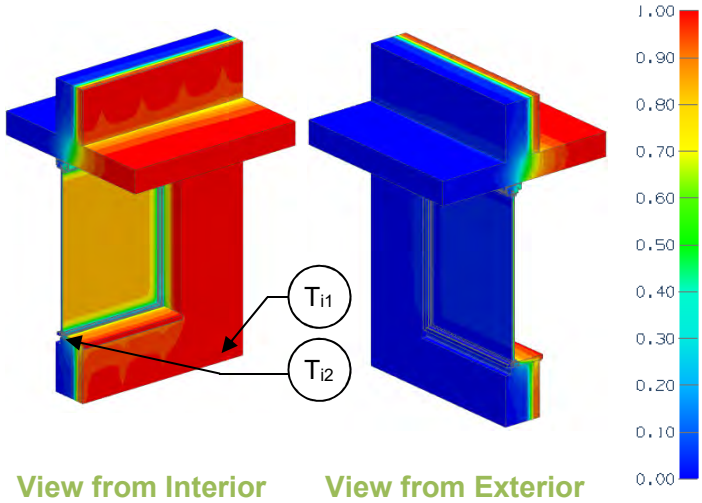

Thermal Performance Indicators

Assembly 1D (Nominal) R-Value	R_{1D}	R-2.9 (0.51 RSI) + interior insulation
Transmittance / Resistance without Anomaly	U_w, R_w U_g,	“clear wall” U- and R-value: w = concrete wall without slab g = glazing
Transmittance / Resistance	U_s, R_s, U_t, R_t	U and R-values for: s = wall + slab t = combined wall + slab + window
Surface Temperature Index[1]	T_i	0 = exterior temperature 1 = interior temperature
Linear Transmittance	ψ_h, ψ_j, ψ_l, ψ_g, ψ_s	Incremental increase in transmittance per linear length of: h = head j = jamb l = sill g = overall glazing s = slab

[1]Assumptions and limitations for surface temperatures identified in ASHRAE 1365-RP

Scenario

Scenario	Sill Sheet Steel
A, B	None
C, D	Yes

Base Assembly – Glazing

$U_{centre\ of\ glass}$ Btu/ft^2 ·hr ·°F (W/m^2 K)	U_g Btu/ft^2 ·hr ·°F (W/m^2 K)
0.321 (1.82)	0.400 (2.27)

Nominal (1D) vs. Assembly Performance Indicators

Window Transition Transmittance

Scenario	Interior Insulation 1D R-Value (RSI)	R_t ft^2·hr·°F / Btu (m^2 K / W)	U_t Btu/ft^2 ·hr ·°F (W/m^2 K)	ψ_h Btu/ft ·hr ·°F (W/m K)	ψ_l Btu/ft ·hr ·°F (W/m K)	ψ_j Btu/ft ·hr ·°F (W/m K)	ψ_g Btu/ft ·hr ·°F (W/m K)
A	R-10 (1.76)	R-3.5 (0.62)	0.283 (1.61)	0.091 (0.158)	0.084 (0.145)	0.217 (0.376)	0.143 (0.248)
B	R-15 (2.64)	R-3.7 (0.65)	0.270 (1.53)	0.129 (0.224)	0.094 (0.163)	0.224 (0.388)	0.160 (0.277)
C	R-10 (1.76)	R-3.5 (0.61)	0.290 (1.65)	0.091 (0.158)	0.176 (0.305)	0.217 (0.376)	0.170 (0.293)
D	R-15 (2.64)	R-3.6 (0.64)	0.277 (1.57)	0.129 (0.224)	0.192 (0.333)	0.224 (0.388)	0.188 (0.325)

Base Assembly – Concrete Clear Wall

Interior Insulation 1D R-Value (RSI)	R_{1D} ft^2·hr·°F / Btu (m^2 K / W)	R_w ft^2·hr·°F / Btu (m^2 K / W)	U_w Btu/ft^2 ·hr ·°F (W/m^2 K)
R-10 (1.76)	R-12.9 (2.28)	R-12.3 (2.16)	0.077 (0.44)
R-15 (2.64)	R-17.9 (3.16)	R-17.3 (3.05)	0.056 (0.32)

Slab Linear Transmittance

R_s ft^2·hr·°F / Btu (m^2 K / W)	U_s Btu/ft^2 ·hr ·°F (W/m^2 K)	ψ_s Btu/ft^2 ·hr ·°F (W/m^2 K)
R-7.4 (1.3)	0.135 (0.77)	0.499 (0.864)
R-9.1 (1.6)	0.110 (0.63)	0.471 (0.815)

Temperature Indices

	A	B	C	D	
T_{i1}	0.07	0.05	0.07	0.05	Min T on concrete, away from window slab and studs
T_{i2}	0.29	0.28	0.23	0.23	Min T on window frame, at bottom middle of glazing

Detail 7.3.4

Precast Sandwich Panel Wall Assembly with Concrete at Panel Perimeter and Steel Connectors (24" o.c.) - Window Intersection

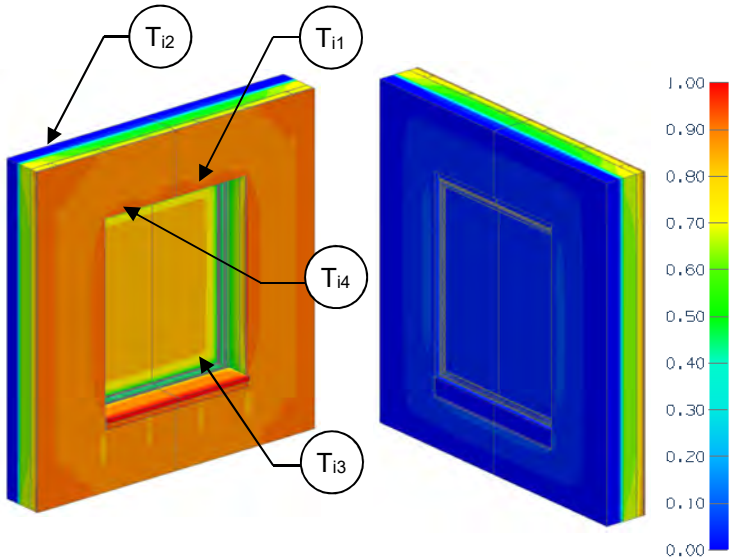

View from Interior View from Exterior

Thermal Performance Indicators

Assembly 1D (Nominal) R-Value	R_{1D}	R-3.9 (0.69 RSI) + sandwich panel insulation
Transmittance / Resistance without Anomaly	U_w, R_w, U_g	"clear wall" U- and R-value: w = sandwich panel g = glazing
Transmittance / Resistance	U_j, R_j, U_t, R_t,	U and R-values for: j = sandwich panel with concrete perimeter t = sandwich panel with concrete perimeter + glazing
Surface Temperature Index[1]	T_i	0 = exterior temperature 1 = interior temperature
Linear Transmittance	ψ_j, ψ_t	Incremental increase in transmittance per linear length of: j = concrete perimeter t = glazing transition

[1]Assumptions and limitations for surface temperatures identified in ASHRAE 1365-RP

Nominal (1D) vs. Assembly Performance Indicators

Base Assembly – Precast Clear Wall

Sandwich Panel Insulation 1D R-Value (RSI)	R_{1D} ft²·hr·°F / Btu (m² K / W)	R_w ft²·hr·°F / Btu (m² K / W)	U_w Btu/ft² ·hr ·°F (W/m² K)
R-10 (1.76)	R-13.9 (2.45)	R-12.6 (2.22)	0.079 (0.45)

Base Assembly - Glazing

$U_{centre\ of\ glass}$ Btu/ft² ·hr ·°F (W/m² K)	U_g Btu/ft² ·hr ·°F (W/m² K)
0.321 (1.82)	0.400 (2.27)

Window Transition Linear Transmittance

Sandwich Panel Insulation 1D R-Value (RSI)	R_t ft²·hr·°F / Btu (m² K / W)	U_t Btu/ft² ·hr ·°F (W/m² K)	ψ_t[2] Btu/ft ·hr·°F (W/m K)
R-10 (1.76)	R-1.9 (0.33)	0.536 (3.04)	0.789 (1.366)

[2]For the linear transmittance, use the window perimeter

Temperature Indices

T_{i1}	0.45	Min T on sandwich panel, at concrete edge next to window opening
T_{i2}	0.69	Max T on sandwich panel, at centre of panel away from concrete edges
T_{i3}	0.43	Min T on glazing, at corner of window frame
T_{i4}	0.40	Min T on window frame, at window head

Detail 7.3.5

Precast Sandwich Panel Wall Assembly with 3 5/8″ Steel Stud (16″ O.C.) – Window Intersection

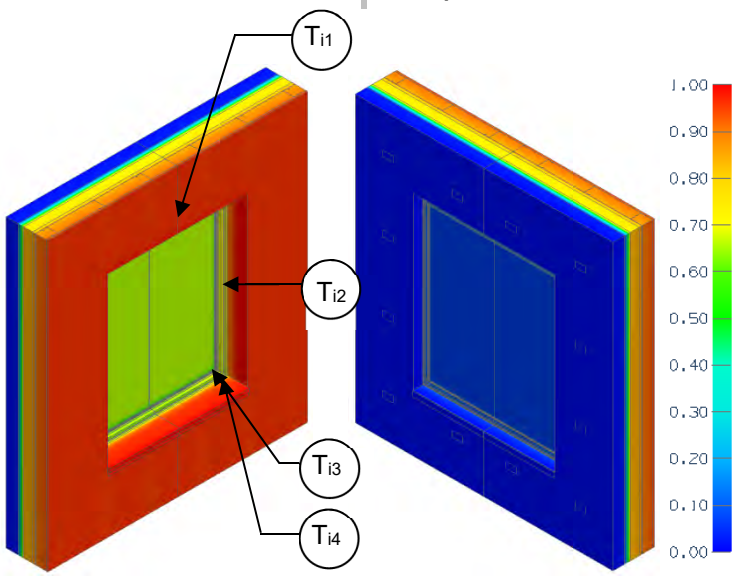

View from Interior **View from Exterior**

Thermal Performance Indicators

Assembly 1D (Nominal) R-Value	R_{1D}	R-3.9 (0.69 RSI) + sandwich panel insulation
Transmittance / Resistance without Anomaly	U_w, R_w, U_g	"clear wall" U- and R-value: w = sandwich panel wall g = glazing
Transmittance / Resistance	U, R	U and R-values for the assembly
Surface Temperature Index[1]	T_i	0 = exterior temperature 1 = interior temperature
Linear Transmittance	ψ	Incremental increase in transmittance per linear length of glazing transition

[1]Assumptions and limitations for surface temperatures identified in ASHRAE 1365-RP

Nominal (1D) vs. Assembly Performance Indicators

Base Assembly – Wall

R_{1D} ft²·hr·°F / Btu (m² K / W)	R_w ft²·hr·°F / Btu (m² K / W)	U_w Btu/ft² ·hr ·°F (W/m² K)
R-13.9 (2.45)	R-12.6 (2.22)	0.079 (0.45)

Base Assembly – Glazing

$U_{centre\ of\ glass}$ Btu/ft² ·hr ·°F (W/m² K)	U_g Btu/ft² ·hr ·°F (W/m² K)
0.321 (1.82)	0.400 (2.27)

Window Point and Linear Transmittance

R ft²·hr·°F / Btu (m² K / W)	U Btu/ft² ·hr ·°F (W/m² K)	ψ[2] Btu/ft hr °F (W/m K)
R-10.9 (1.92)	0.091 (0.52)	0.028 (0.048)

[2]For linear transmittance, use window perimeter for length

Temperature Indices

T_{i1}	0.82	Min T on concrete wall, centered above window head
T_{i2}	0.86	Max T on concrete wall, at steel stud and window frame
T_{i3}	0.59	Min T on window frame, at bottom corner
T_{i4}	0.56	Min T on window glass, in lower corner

Detail 7.3.6

Exterior Insulated Concrete Drained EIFS Wall Assembly – Window with Aerogel and Intermediate Floor Intersection

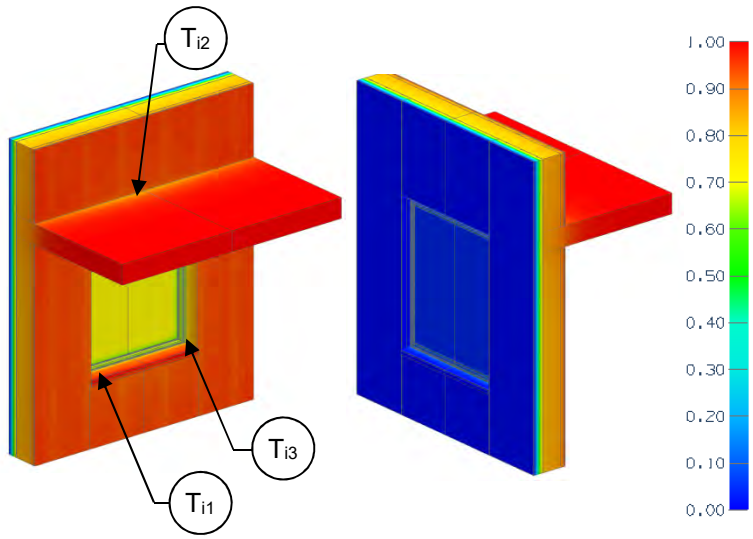

View from Interior View from Exterior

Thermal Performance Indicators

Assembly 1D (Nominal) R-Value	R_{1D}	R-3.0 (0.53 RSI) + exterior insulation
Transmittance / Resistance without Anomaly	U_w, R_w, U_g	"clear wall" U- and R-value: w = wall without slab g = glazing
Transmittance / Resistance	U_s, R_s, U_t, R_t	U and R-values for: s = wall + slab t = combined wall + slab + window
Surface Temperature Index[1]	T_i	0 = exterior temperature 1 = interior temperature
Linear Transmittance	ψ_s, ψ_g	Incremental increase in transmittance per linear length of s = slab g = glazing transition

[1]Assumptions and limitations for surface temperatures identified in ASHRAE 1365-RP

Nominal (1D) vs. Assembly Performance Indicators

Base Assembly – Concrete Clear Wall

Exterior Insulation 1D R-Value (RSI)	R_{1D} ft²·hr·°F / Btu (m² K / W)	R_w ft²·hr·°F / Btu (m² K / W)	U_w Btu/ft² ·hr ·°F (W/m² K)
R-15 (2.64)	R-18.0 (3.17)	R-17.6 (3.10)	0.057 (0.32)

Base Assembly - Glazing

$U_{centre\ of\ glazing}$ Btu/ft² ·hr ·°F (W/m² K)	U_g Btu/ft² ·hr ·°F (W/m² K)
0.321 (1.82)	0.400 (2.27)

Slab Linear Transmittance

Exterior Insulation 1D R-Value (RSI)	R_s ft²·hr·°F / Btu (m² K / W)	U_s Btu/ft² ·hr ·°F (W/m² K)	ψ_s Btu/ft² ·hr ·°F (W/m² K)
R-15 (2.64)	R-17.1 (3.02)	0.058 (0.33)	0.013 (0.023)

Window Transition Linear Transmittance

R_t ft²·hr·°F / Btu (m² K / W)	U_t Btu/ft² ·hr ·°F (W/m² K)	ψ_g[2] Btu/ft hr °F (W/m K)
R-6.1 (1.07)	0.164 (0.93)	0.106 (0.184)

Temperature Indices

T_{i1}	0.82	Min T on concrete interior surface, below window sill between studs
T_{i2}	0.91	Max T on concrete, at floor slab intersection away from window
T_{i3}	0.59	Min T on window frame, at corner of glass

[2]For the linear transmittance, use the window perimeter

Detail 7.3.7

Interior Insulated Concrete Block or Concrete Wall Assembly with Brick Cladding - Window Intersection

Detail referenced from work done by Passive House Academy

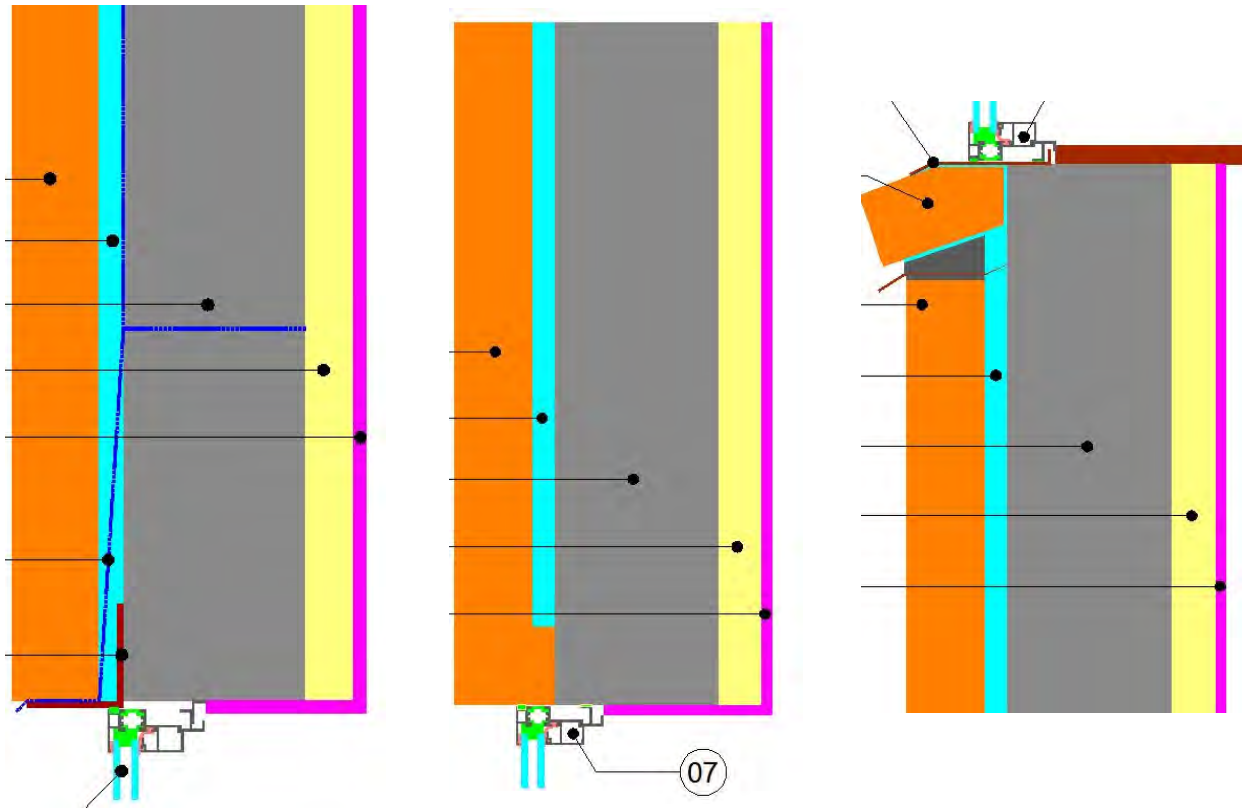

Head Jamb Sill

Thermal Performance

Condition	Clear Wall R-Value ft²·hr·°F / Btu (m²K / W)	Clear Wall U-Value Btu/ ft²·hr·°F (W/m²K)	Linear Transmittance (Ψ) Btu/hr ft °F (W/m K)
Wall Clear Field	R-16.0 (2.85)	0.063 (0.351)	-
Typical Jamb			0.308 (0.533)
Typical Head			0.315 (0.546)
Typical Sill			0.322 (0.558)
Typical Overall Window			0.313 (0.543)

Detail 7.3.8

Interior Insulated Concrete Block or Concrete Wall Assembly with Brick Cladding - Window Intersection Aligned with Insulation

Detail referenced from work done by Passive House Academy

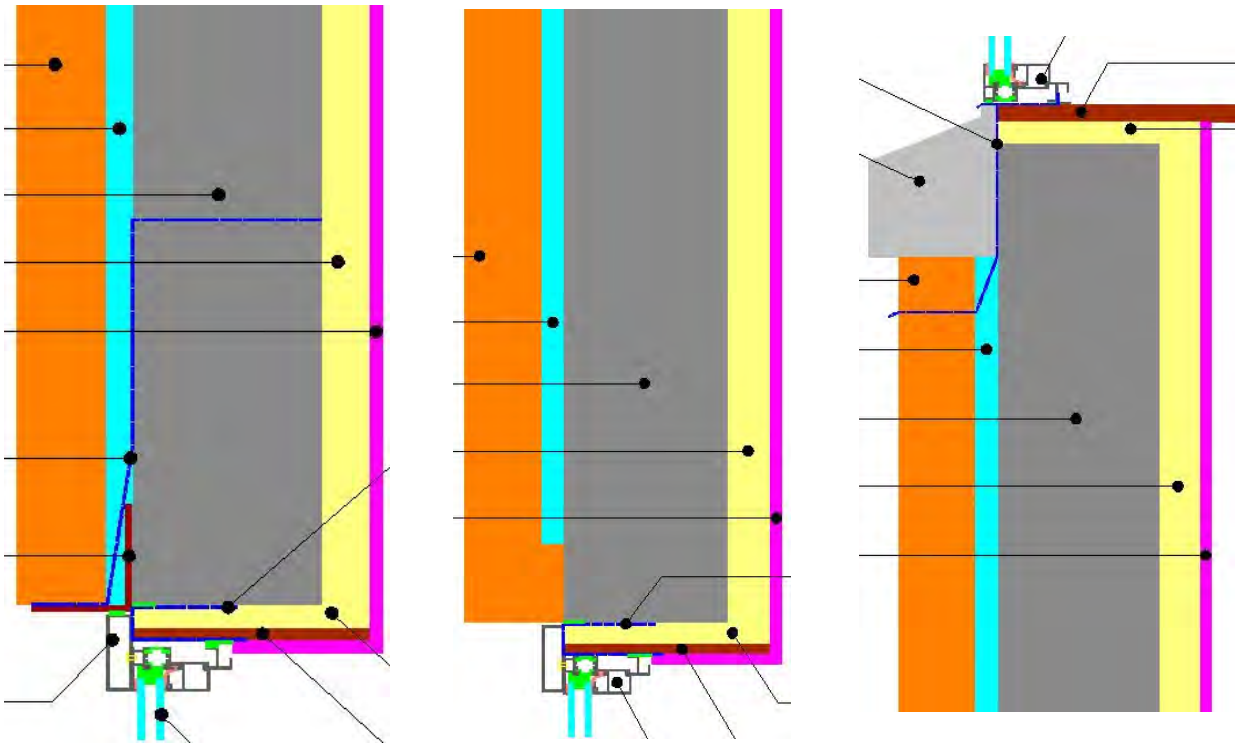

Head Jamb Sill

Thermal Performance

Condition	Clear Wall R-Value ft²·hr·°F / Btu (m²K / W)	Clear Wall U-Value Btu/ ft²·hr·°F (W/m²K)	Linear Transmittance (Ψ) Btu/hr ft °F (W/m K)
Wall Clear Field	R-16.0 (2.85)	0.063 (0.351)	-
Aligned Jamb			0.079 (0.136)
Aligned Head			0.086 (0.149)
Aligned Sill			0.088 (0.152)
Aligned Overall Window			0.083 (0.143)

Detail 7.3.9

Interior Insulated Concrete Mass Wall with 1 5/8" x 1 5/8" Steel Studs (16" o.c.) Supporting Interior Finish – Window & Projected Slab Intersection with Plywood and Insulation Liner

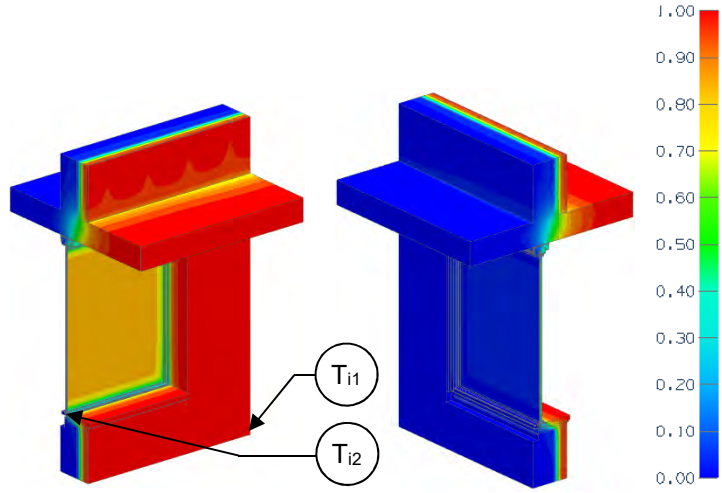

View from Interior View from Exterior

Thermal Performance Indicators

Assembly 1D (Nominal) R-Value	R_{1D}	R-2.9 (0.51 RSI) + interior insulation
Transmittance / Resistance	U_t, R_t	U and R-values for: t = combined wall + slab + window
Surface Temperature Index[1]	T_i	0 = exterior temperature 1 = interior temperature
Linear Transmittance[2]	ψ_h, ψ_j, ψ_l, ψ_g	Incremental increase in transmittance per linear length of: h = head j = jamb l = sill g = overall glazing

[1]Assumptions and limitations for surface temperatures identified in ASHRAE 1365-RP
[2]For performance of base assembly and slab linear transmittances, refer to Detail 7.3.3

Scenario

Scenario	Liner Insulation
A, B	None
C, D	R-5 (0.88)

Nominal (1D) vs. Assembly Performance Indicators

Window Transition Transmittance

Scenario	Interior Insulation 1D R-Value (RSI)	R_t ft²·hr·°F / Btu (m² K / W)	U_t Btu/ft² ·hr ·°F (W/m² K)	ψ_h Btu/ft ·hr ·°F (W/m K)	ψ_l Btu/ft ·hr ·°F (W/m K)	ψ_j Btu/ft ·hr ·°F (W/m K)	ψ_g Btu/ft ·hr ·°F (W/m K)
A	R-10 (1.76)	R-3.6 (0.64)	0.275 (1.56)	0.091 (0.158)	0.066 (0.114)	0.155 (0.268)	0.111 (0.192)
B	R-15 (2.64)	R-3.8 (0.67)	0.263 (1.49)	0.129 (0.224)	0.088 (0.152)	0.160 (0.277)	0.131 (0.226)
C	R-10 (1.76)	R-3.8 (0.66)	0.265 (1.51)	0.091 (0.158)	0.046 (0.079)	0.076 (0.131)	0.072 (0.124)
D	R-15 (2.64)	R-4.0 (0.70)	0.253 (1.43)	0.129 (0.224)	0.066 (0.113)	0.080 (0.139)	0.090 (0.156)

Temperature Indices

	A	B	C	D	
T_{i1}	0.06	0.05	0.06	0.05	Min T on concrete, away from window slab and studs
T_{i2}	0.28	0.29	0.31	0.32	Min T on window frame, at bottom middle of glazing

Detail 7.3.10

Interior Insulated Concrete Mass Wall with 1 5/8" x 1 5/8" Steel Studs (16" o.c.) Supporting Interior Finish – Window & Projected Slab Intersection with Wall Insulation Wrapped into Opening

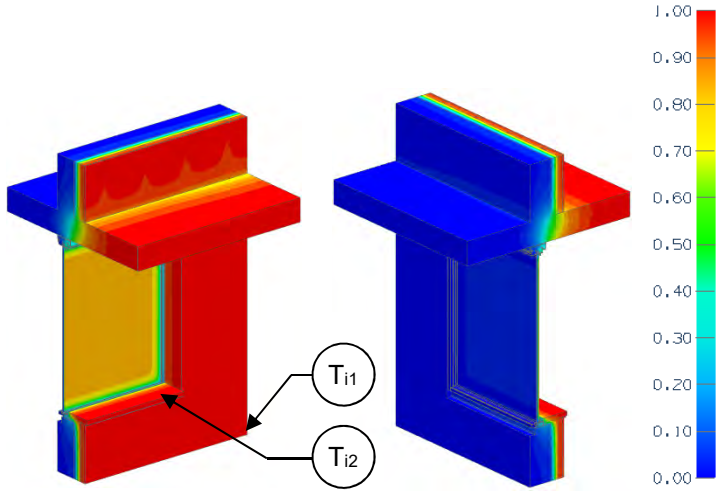

View from Interior View from Exterior

Thermal Performance Indicators

Assembly 1D (Nominal) R-Value	R_{1D}	R-2.9 (0.51 RSI) + interior insulation
Transmittance / Resistance	U_t, R_t	U and R-values for: t = combined wall + slab + window
Surface Temperature Index[1]	T_i	0 = exterior temperature 1 = interior temperature
Linear Transmittance[2]	ψ_h, ψ_j, ψ_l, ψ_g	Incremental increase in transmittance per linear length of: h = head j = jamb l = sill g = overall glazing

[1]Assumptions and limitations for surface temperatures identified in ASHRAE 1365-RP

[2]For performance of base assembly and slab linear transmittances, refer to Detail 7.3.3

Scenario

Scenario	Sill Shim Insulation
A, B, C, D	None
E, F, G, H	Yes

Nominal (1D) vs. Assembly Performance Indicators

Window Transition Transmittance

	Interior Insulation 1D R-Value (RSI)	Opening Insulation 1D R-Value (RSI)	R_t ft²·hr·°F / Btu (m² K / W)	U_t Btu/ft² ·hr ·°F (W/m² K)	ψ_h Btu/ft ·hr ·°F (W/m K)	ψ_l Btu/ft ·hr ·°F (W/m K)	ψ_j Btu/ft ·hr ·°F (W/m K)	ψ_g Btu/ft ·hr ·°F (W/m K)
A	R-10 (1.76)	R-5 (0.88)	R-3.7 (0.65)	0.272 (1.55)	0.091 (0.158)	0.129 (0.223)	0.087 (0.151)	0.100 (0.174)
B	R-15 (2.64)		R-3.9 (0.68)	0.259 (1.47)	0.129 (0.224)	0.142 (0.246)	0.091 (0.157)	0.116 (0.201)
C	R-10 (1.76)	R-10 (1.76)	R-3.7 (0.66)	0.268 (1.52)	0.091 (0.158)	0.085 (0.146)	0.073 (0.127)	0.082 (0.141)
D	R-15 (2.64)		R-3.9 (0.69)	0.254 (1.44)	0.129 (0.224)	0.086 (0.149)	0.076 (0.132)	0.094 (0.163)
E	R-10 (1.76)	R-5 (0.88)	R-3.7 (0.65)	0.270 (1.54)	0.091 (0.158)	0.100 (0.172)	0.087 (0.151)	0.092 (0.159)
F	R-15 (2.64)		R-3.9 (0.68)	0.257 (1.46)	0.129 (0.224)	0.113 (0.196)	0.091 (0.157)	0.108 (0.187)
G	R-10 (1.76)	R-10 (1.76)	R-3.8 (0.66)	0.266 (1.51)	0.091 (0.158)	0.054 (0.093)	0.073 (0.127)	0.073 (0.126)
H	R-15 (2.64)		R-4.0 (0.70)	0.252 (1.43)	0.129 (0.224)	0.057 (0.099)	0.076 (0.132)	0.086 (0.149)

Temperature Indices

	A	B	C	D	E	F	G	H	
T_{i1}	0.06	0.05	0.06	0.05	0.06	0.05	0.06	0.05	Min T on concrete, away from window slab and studs
T_{i2}	0.26	0.25	0.26	0.25	0.30	0.29	0.29	0.28	Min T on window frame, at bottom corner

Detail 7.3.11

Interior Insulated Concrete Mass Wall with 1 5/8" x 1 5/8" Steel Studs (16" o.c.) Supporting Interior Finish – Window & Projected Slab Intersection – Plywood Liner and Glazing Aligned with Wall Insulation

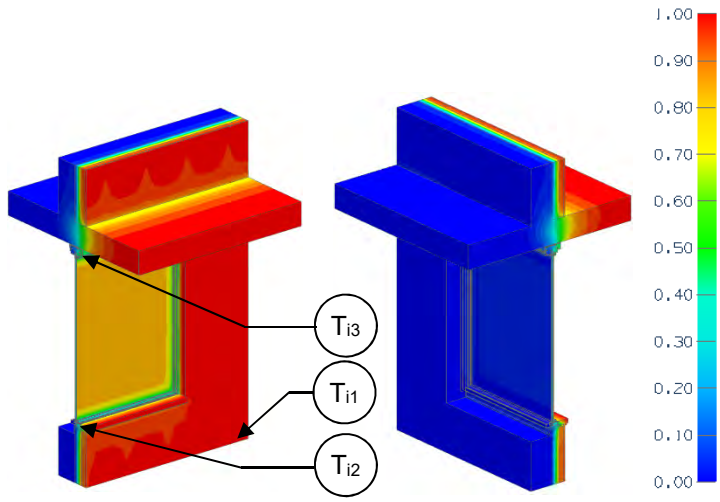

View from Interior View from Exterior

Thermal Performance Indicators

Assembly 1D (Nominal) R-Value	R_{1D}	R-2.9 (0.51 RSI) + interior insulation
Transmittance / Resistance	U_t, R_t	U and R-values for: t = combined wall + slab + window
Surface Temperature Index[1]	T_i	0 = exterior temperature 1 = interior temperature
Linear Transmittance[2]	ψ_h, ψ_j, ψ_l, ψ_g	Incremental increase in transmittance per linear length of: h = head j = jamb l = sill g = overall glazing

[1]Assumptions and limitations for surface temperatures identified in ASHRAE 1365-RP
[2]For performance of base assembly and slab linear transmittances, refer to Detail 7.3.3

Scenario

Scenario	Sill Shim Insulation
A, B	None
C, D	Yes

Nominal (1D) vs. Assembly Performance Indicators

Window Transition Transmittance

Scenario	Interior Insulation 1D R-Value (RSI)	R_t ft²·hr·°F / Btu (m² K / W)	U_t Btu/ft² ·hr ·°F (W/m² K)	ψ_h Btu/ft ·hr ·°F (W/m K)	ψ_l Btu/ft ·hr ·°F (W/m K)	ψ_j Btu/ft ·hr ·°F (W/m K)	ψ_g Btu/ft ·hr ·°F (W/m K)
A	R-10 (1.76)	R-3.8 (0.68)	0.261 (1.48)	0.052 (0.09)	0.068 (0.118)	0.044 (0.076)	0.053 (0.092)
B	R-15 (2.64)	R-4.1 (0.72)	0.246 (1.39)	0.080 (0.139)	0.061 (0.106)	0.051 (0.088)	0.062 (0.107)
C	R-10 (1.76)	R-3.9 (0.69)	0.255 (1.45)	0.052 (0.090)	-0.004 (-0.007)	0.044 (0.076)	0.033 (0.056)
D	R-15 (2.64)	R-4.2 (0.73)	0.240 (1.36)	0.080 (0.139)	-0.023 (-0.040)	0.051 (0.088)	0.038 (0.066)

Temperature Indices

	A	B	C	D	
T_{i1}	0.05	0.04	0.04	0.03	Min T on concrete, away from window slab and studs
T_{i2}	-	-	0.47	0.47	Min T on window frame, at bottom middle of glazing
T_{i3}	0.39	0.39	-	-	Min T on window frame, at top middle of glazing

Detail 7.3.12

Exterior Insulated Concrete Mass Wall with 1 5/8" x 1 5/8" Steel Stud (16" o.c.) and Thermally Isolated Vertical Brackets and Rail System (24" o.c.) Supporting Metal Cladding – Triple Glazed Aluminum Window & Intermediate Floor Intersection with Window Thermal Break Positioned in Concrete Opening

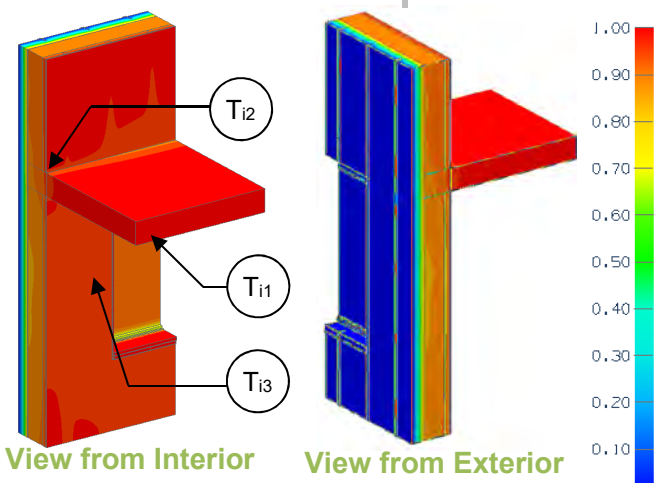

Base Assembly – Glazing

$U_{centre\ of\ glass}$ Btu/ft^2 ·hr ·°F (W/m^2 K)	U_g Btu/ft^2 ·hr ·°F (W/m^2 K)
0.142 (0.81)	0.301 (1.72)

Thermal Performance Indicators

Assembly 1D (Nominal) R-Value	R_{1D}	R-3.4 (0.59 RSI) + exterior insulation
Transmittance / Resistance without Anomaly	U_w, R_w U_g,	"clear wall" U- and R-value: w = wall without intermediate floor g = glazing
Transmittance / Resistance	U_{floor}, R_{floor}, U_t, R_t	U and R-values for: floor = wall + intermediate floor t = combined wall + slab + window
Surface Temperature Index[1]	T_i	0 = exterior temperature 1 = interior temperature
Linear Transmittance	ψ	Incremental increase in transmittance per linear length

[1]Assumptions and limitations for surface temperatures identified in ASHRAE 1365-RP

Nominal (1D) vs. Assembly Performance Indicators

Base Assembly – Steel Stud Clear Wall

Exterior Insulation 1D R-Value (RSI)	R_{1D} ft^2·hr·°F / Btu (m^2 K / W)	R_w ft^2·hr·°F / Btu (m^2 K / W)	U_w Btu/ft^2 ·hr ·°F (W/m^2 K)
R-10 (1.76)	R-13.4 (2.35)	R-10.9 (1.92)	0.092 (0.52)
R-15 (2.64)	R-18.4 (3.23)	R-13.3 (2.34)	0.075 (0.43)
R-20 (3.52)	R-23.4 (4.11)	R-15.9 (2.80)	0.063 (0.36)
R-25 (4.40)	R-28.4 (4.99)	R-18.3 (3.22)	0.055 (0.31)

Intermediate Floor Linear Transmittance

R_{floor} ft^2·hr·°F / Btu (m^2 K / W)	U_{floor} Btu/ft^2 ·hr ·°F (W/m^2 K)	ψ_{floor} Btu/ft^2 ·hr ·°F (W/m^2 K)
R-10.4 (1.84)	0.096 (0.55)	0.030 (0.052)
R-12.6 (2.22)	0.079 (0.45)	0.030 (0.051)
R-15.0 (2.65)	0.066 (0.38)	0.026 (0.045)
R-17.3 (3.05)	0.058 (0.33)	0.022 (0.037)

Window Transition Transmittance

Exterior Insulation 1D R-Value (RSI)	R_t ft^2·hr·°F / Btu (m^2 K / W)	U_t Btu/ft^2 ·hr ·°F (W/m^2 K)	ψ_{Head} Btu/ft ·hr ·°F (W/m K)	ψ_{Sill} Btu/ft ·hr ·°F (W/m K)	ψ_{Jamb} Btu/ft ·hr ·°F (W/m K)	ψ_{Total} Btu/ft ·hr ·°F (W/m K)
R-10 (1.76)	R-5.6 (0.99)	0.178 (1.01)	0.247 (0.428)	0.151 (0.261)	0.111 (0.192)	0.190 (0.328)
R-15 (2.64)	R-6.0 (1.05)	0.167 (0.95)	0.257 (0.445)	0.168 (0.291)	0.121 (0.209)	0.202 (0.350)
R-20 (3.52)	R-6.3 (1.10)	0.160 (0.91)	0.268 (0.463)	0.177 (0.306)	0.129 (0.224)	0.212 (0.368)
R-25 (4.40)	R-6.5 (1.14)	0.154 (0.87)	0.274 (0.475)	0.183 (0.316)	0.135 (0.234)	0.218 (0.378)

Temperature Indices

	R10	R15	R20	R25	
T_{i1}	0.43	0.44	0.44	0.44	Min T on window frame, at centre of window head
T_{i3}	0.84	0.86	0.87	0.89	Max T on interior surface of concrete at floor
T_{i4}	0.74	0.75	0.76	0.77	Min T on interior surface of concrete window jamb

Detail 7.3.13

Exterior Insulated Concrete Mass Wall with 1 5/8" x 1 5/8" Steel Stud (16" o.c.) and Thermally Isolated Vertical Brackets and Rail System (24" o.c.) Supporting Metal Cladding – Triple Glazed Aluminum Curtain Wall & Intermediate Floor Intersection with Window Thermal Break Positioned in the Exterior Insulation

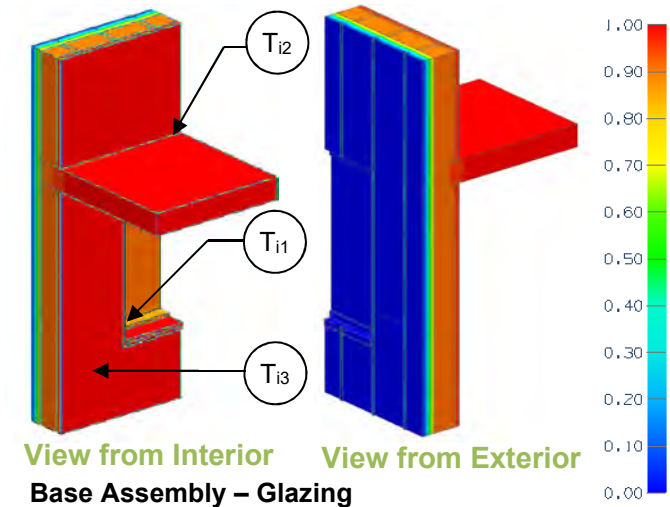

Base Assembly – Glazing

$U_{centre\ of\ glass}$ Btu/ft^2 ·hr ·ºF (W/m^2 K)	U_g Btu/ft^2 ·hr ·ºF (W/m^2 K)
0.142 (0.81)	0.303 (1.72)

Thermal Performance Indicators

Assembly 1D (Nominal) R-Value	R_{1D}	R-3.4 (0.59 RSI) + exterior insulation
Transmittance / Resistance without Anomaly	U_w, R_w U_g,	"clear wall" U- and R-value: w = wall without intermediate floor g = glazing
Transmittance / Resistance	U_{floor}, R_{floor}, U_t, R_t	U and R-values for: floor = wall + intermediate floor t = combined wall + slab + window
Surface Temperature Index[1]	T_i	0 = exterior temperature 1 = interior temperature
Linear Transmittance	ψ	Incremental increase in transmittance per linear length

[1]Assumptions and limitations for surface temperatures identified in ASHRAE 1365-RP

Nominal (1D) vs. Assembly Performance Indicators

Base Assembly – Steel Stud Clear Wall

Exterior Insulation 1D R-Value (RSI)	R_{1D} ft^2·hr·ºF / Btu (m^2 K / W)	R_w ft^2·hr·ºF / Btu (m^2 K / W)	U_w Btu/ft^2 ·hr ·ºF (W/m^2 K)
R-10 (1.76)	R-13.4 (2.35)	R-10.9 (1.92)	0.092 (0.52)
R-15 (2.64)	R-18.4 (3.23)	R-13.3 (2.34)	0.075 (0.43)
R-20 (3.52)	R-23.4 (4.11)	R-15.9 (2.80)	0.063 (0.36)
R-25 (4.40)	R-28.4 (4.99)	R-18.3 (3.22)	0.055 (0.31)

Intermediate Floor Linear Transmittance

R_{floor} ft^2·hr·ºF / Btu (m^2 K / W)	U_{floor} Btu/ft^2 ·hr ·ºF (W/m^2 K)	ψ_{floor} Btu/ft^2 ·hr ·ºF (W/m^2 K)
R-10.4 (1.84)	0.096 (0.55)	0.030 (0.052)
R-12.6 (2.22)	0.079 (0.45)	0.030 (0.051)
R-15.0 (2.65)	0.066 (0.38)	0.026 (0.045)
R-17.3 (3.05)	0.058 (0.33)	0.022 (0.037)

Window Transition Transmittance

Exterior Insulation 1D R-Value (RSI)	R_t ft^2·hr·ºF / Btu (m^2 K / W)	U_t Btu/ft^2 ·hr ·ºF (W/m^2 K)	ψ_{Head} Btu/ft ·hr ·ºF (W/m K)	ψ_{Sill} Btu/ft ·hr ·ºF (W/m K)	ψ_{Jamb} Btu/ft ·hr ·ºF (W/m K)	ψ_{Total} Btu/ft ·hr ·ºF (W/m K)
R-10 (1.76)	R-8.1 (1.42)	0.124 (0.70)	0.038 (0.066)	0.027 (0.046)	0.052 (0.090)	0.015 (0.026)
R-15 (2.64)	R-8.9 (1.57)	0.112 (0.64)	0.040 (0.070)	0.026 (0.045)	0.062 (0.107)	0.024 (0.041)
R-20 (3.52)	R-9.5 (1.67)	0.106 (0.60)	0.046 (0.079)	0.028 (0.049)	0.071 (0.123)	0.040 (0.069)
R-25 (4.40)	R-10.0 (1.76)	0.100 (0.57)	0.051 (0.089)	0.030 (0.052)	0.078 (0.135)	0.047 (0.081)

Temperature Indices

	R-10	R-15	R-20	R-25	
T_{i1}	0.75	0.76	0.76	0.76	Min T on window frame, at bottom corner
T_{i3}	0.89	0.90	0.91	0.92	Max T on interior surface of concrete at floor
T_{i4}	0.82	0.84	0.86	0.87	Min T on interior surface of concrete between steel studs

Detail 7.3.14

Owens Corning Exterior Insulated Concrete Block Wall Assembly with Heckmann Pos-I-Tie Veneer Anchoring System Supporting Brick Veneer with Insulation Interrupted at Window Perimeter – Double Glazed Aluminum Window and Intermediate Floor Intersection

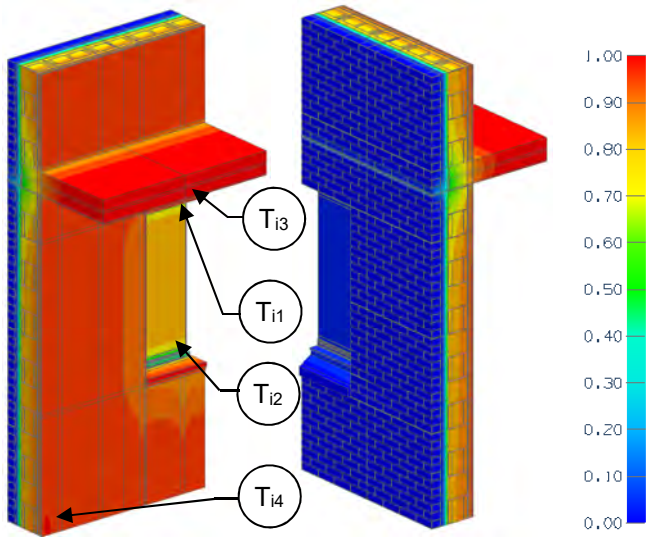

View from Interior View from Exterior

Thermal Performance Indicators

Assembly 1D (Nominal) R-Value	R_{1D}	R-5.6 (0.99 RSI) + exterior insulation
Transmittance / Resistance without Anomaly	U_w, R_w, U_g,	"clear wall" U- and R-value: w = wall without intermediate floor g = glazing
Transmittance / Resistance	U_{floor}, R_{floor}, U_t, R_t	U and R-values for: floor = wall + intermediate floor t = combined wall + floor + window
Surface Temperature Index[1]	T_i	0 = exterior temperature 1 = interior temperature
Linear Transmittance	ψ	Incremental increase in transmittance per linear length

[1]Assumptions and limitations for surface temperatures identified in ASHRAE 1365-RP

Base Assembly – Glazing

$U_{centre\ of\ glass}$ Btu/ft^2 ·hr ·°F (W/m^2 K)	U_g Btu/ft^2 ·hr ·°F (W/m^2 K)
0.321 (1.82)	0.408 (2.32)

Nominal (1D) vs. Assembly Performance Indicators

Base Assembly – Steel Stud Clear Wall

Exterior Insulation 1D R-Value (RSI)	R_{1D} ft^2·hr·°F / Btu (m^2 K / W)	R_w ft^2·hr·°F / Btu (m^2 K / W)	U_w Btu/ft^2 ·hr ·°F (W/m^2 K)
R-10.0 (1.76)	R-15.6 (2.75)	R-13.4 (2.36)	0.075 (0.42)
R-20.0 (3.52)	R-25.6 (4.51)	R-20.0 (3.52)	0.050 (0.28)

Intermediate Floor Linear Transmittance

R_{floor} ft^2·hr·°F / Btu (m^2 K / W)	U_{floor} Btu/ft^2 ·hr ·°F (W/m^2 K)	ψ_{floor} Btu/ft^2 ·hr ·°F (W/m^2 K)
R-8.3 (1.46)	0.121 (0.69)	0.277 (0.480)
R-10.1 (1.78)	0.099 (0.56)	0.292 (0.506)

Window Transition Transmittance

Exterior Insulation 1D R-Value (RSI)	R_t ft^2·hr·°F / Btu (m^2 K / W)	U_t Btu/ft^2 ·hr ·°F (W/m^2 K)	ψ_{Head} Btu/ft ·hr ·°F (W/m K)	ψ_{Sill} Btu/ft ·hr ·°F (W/m K)	ψ_{Jamb} Btu/ft ·hr ·°F (W/m K)	ψ_{Total} Btu/ft ·hr ·°F (W/m K)
R-10.0 (1.76)	R-5.7 (1.00)	0.177 (0.28)	0.141 (0.24)	0.395 (0.68)	0.244 (0.42)	0.431 (0.746)
R-20.0 (3.52)	R-7.1 (1.24)	0.142 (0.28)	0.362 (0.63)	0.131 (0.23)	0.076 (0.13)	0.148 (0.257)

Temperature Indices

	R10	R20	
T_{i1}	0.53	0.43	Min T at centre of window head
T_{i2}	0.47	0.62	Min T at centre of window sill
T_{i3}	0.74	0.75	Min T on interior surface of CMU at ceiling
T_{i4}	0.85	0.90	Max T on interior surface of CMU at steel studs, away from floor

Detail 7.3.15

Owens Corning Exterior Insulated Concrete Block Wall Assembly with Heckmann Pos-I-Tie Veneer Anchoring System Supporting Brick Veneer with Reduced Insulation at Jambs – Triple Glazed Aluminum High Performance Window and Intermediate Floor Intersection

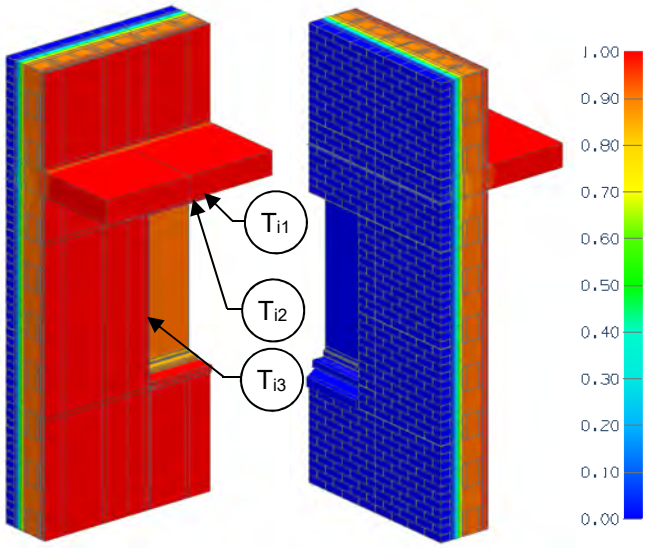

View from Interior View from Exterior

Thermal Performance Indicators

Assembly 1D (Nominal) R-Value	R_{1D}	R-5.6 (0.99 RSI) + exterior insulation
Transmittance / Resistance without Anomaly	U_w, R_w, U_g,	"clear wall" U- and R-value: w = wall without intermediate floor g = glazing
Transmittance / Resistance	U_{floor}, R_{floor}, U_t, R_t	U and R-values for: floor = wall + intermediate floor t = combined wall + floor + window
Surface Temperature Index[1]	T_i	0 = exterior temperature 1 = interior temperature
Linear Transmittance	ψ	Incremental increase in transmittance per linear length

[1]Assumptions and limitations for surface temperatures identified in ASHRAE 1365-RP

Base Assembly – Glazing

$U_{centre\ of\ glass}$ Btu/ft^2 ·hr ·°F (W/m^2 K)	U_g Btu/ft^2 ·hr ·°F (W/m^2 K)
0.220 (1.25)	0.204 (1.16)

Nominal (1D) vs. Assembly Performance Indicators

Base Assembly – Steel Stud Clear Wall

Exterior Insulation 1D R-Value (RSI)	R_{1D} ft^2·hr·°F / Btu (m^2 K / W)	R_w ft^2·hr·°F / Btu (m^2 K / W)	U_w Btu/ft^2 ·hr ·°F (W/m^2 K)
R-10.0 (1.76)	R-15.6 (2.75)	R-13.4 (2.36)	0.075 (0.42)
R-20.0 (3.52)	R-25.6 (4.51)	R-20.0 (3.52)	0.050 (0.28)

Intermediate Floor Linear Transmittance

R_{floor} ft^2·hr·°F / Btu (m^2 K / W)	U_{floor} Btu/ft^2 ·hr ·°F (W/m^2 K)	ψ_{floor} Btu/ft^2 ·hr ·°F (W/m^2 K)
R-11.7 (2.06)	0.085 (0.48)	0.064 (0.112)
R-16.9 (2.98)	0.059 (0.34)	0.054 (0.093)

Window Transition Transmittance

Exterior Insulation 1D R-Value (RSI)	R_t ft^2·hr·°F / Btu (m^2 K / W)	U_t Btu/ft^2 ·hr ·°F (W/m^2 K)	ψ_{Head} Btu/ft ·hr ·°F (W/m K)	ψ_{Sill} Btu/ft ·hr ·°F (W/m K)	ψ_{Jamb} Btu/ft ·hr ·°F (W/m K)	ψ_{Total} Btu/ft ·hr ·°F (W/m K)
R-10.0 (1.76)	R-9.6 (1.69)	0.104 (0.42)	0.053 (0.09)	0.020 (0.03)	0.082 (0.14)	0.051 (0.088)
R-20.0 (3.52)	R-12.1 (2.12)	0.083 (0.28)	0.142 (0.25)	0.015 (0.03)	0.058 (0.10)	0.058 (0.101)

Temperature Indices

	R10	R20	
T_{i1}	0.81	0.77	Min T on window frame, at centre of window head
T_{i3}	0.86	0.90	Min T on interior surface of CMU at ceiling
T_{i4}	0.91	0.92	Max T on interior surface of CMU, at Jamb

Detail 7.4.1

Exterior Insulated Concrete Drained EIFS Wall Assembly – Conventional Curtain Wall Transition

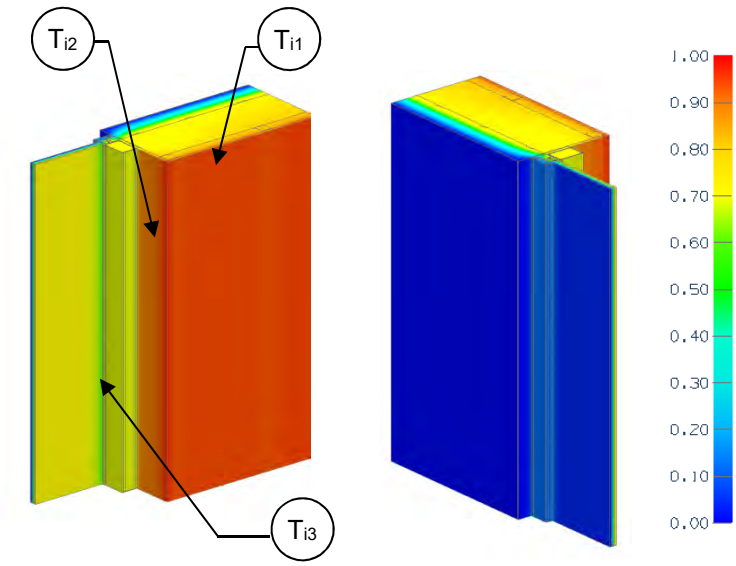

View from Interior View from Exterior

Thermal Performance Indicators

Assembly 1D (Nominal) R-Value	R_{1D}	R-3.0 (0.53 RSI) + exterior insulation
Transmittance / Resistance without Anomaly	U_g, U_w, R_w	"clear wall" U- and R-value for: g = curtain wall glazing w = concrete assembly
Transmittance / Resistance	U, R	U- and R-values for overall assembly
Surface Temperature Index[1]	T_i	0 = exterior temperature 1 = interior temperature
Linear Transmittance	ψ	Incremental increase in transmittance per linear length of curtain wall transition

[1]Assumptions and limitations for surface temperatures identified in ASHRAE 1365-RP

Nominal (1D) vs. Assembly Performance Indicators

Base Assembly – Wall

Exterior Insulation 1D R-Value (RSI)	R_{1D} ft²·hr·°F / Btu (m² K / W)	R_w ft²·hr·°F / Btu (m² K / W)	U_w Btu/ft² ·hr ·°F (W/m² K)
R-15 (2.64)	R-18.0 (3.17)	R-17.6 (3.10)	0.057 (0.32)

Base Assembly – Curtain Wall Glazing

$U_{centre\ of\ glazing}$ Btu/ft² ·hr ·°F (W/m² K)	U_g Btu/ft² ·hr ·°F (W/m² K)
0.321 (1.82)	0.476 (2.70)

Curtain Wall Transition Linear Transmittance

Exterior Insulation 1D R-Value (RSI)	R ft²·hr·°F / Btu (m² K / W)	U Btu/ft² ·hr ·°F (W/m² K)	ψ Btu/ft hr °F (W/m K)
R-15 (2.64)	R-4.4 (0.78)	0.227 (1.29)	0.059 (0.103)

Temperature Indices

T_{i1}	0.79	Min T on concrete interior face, between steel studs
T_{i2}	0.87	Max T on concrete, at drywall return
T_{i3}	0.58	Min T on curtain wall, at glass

Detail 7.4.2

Precast Sandwich Panel Wall Assembly with 3 5/8″ Steel Stud (16″ o.c.) – Curtain Wall Spandrel Transition

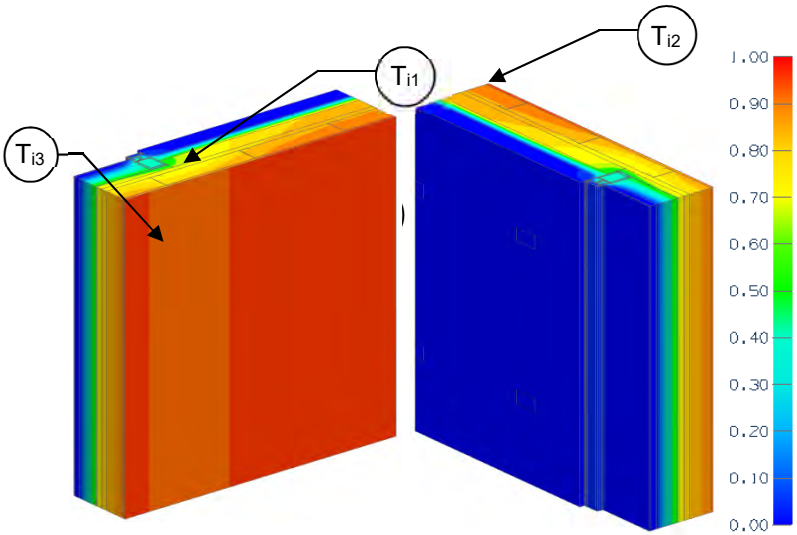

View from Interior **View from Exterior**

Thermal Performance Indicators

Assembly 1D (Nominal) R-Value	R_{1Dw}, R_{1Dcw}	Nominal thermal resistance of two base assemblies: w = concrete wall cw = curtain wall
Transmittance / Resistance without Anomaly	U_w, R_w, U_{cw}, R_{cw}	"clear wall" U- and R-value for the two base assemblies
Transmittance / Resistance	U, R	U- and R-values for overall assembly
Surface Temperature Index[1]	T_i	0 = exterior temperature 1 = interior temperature
Linear Transmittance	ψ	Incremental increase in transmittance per linear length of transition joint

[1]Assumptions and limitations for surface temperatures identified in ASHRAE 1365-RP

Nominal (1D) vs. Assembly Performance Indicators

Base Assembly – Wall

R_{1Dw} ft²·hr·°F / Btu (m² K / W)	R_w ft²·hr·°F / Btu (m² K / W)	U_w Btu/ft² ·hr ·°F (W/m² K)
R-13.9 (2.45)	R-12.6 (2.22)	0.079 (0.45)

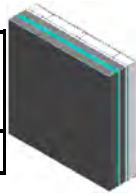

Base Assembly – Curtain Wall[2]

R_{1Dcw} ft²·hr·°F / Btu (m² K / W)	R_{cw} ft²·hr·°F / Btu (m² K / W)	U_{cw} Btu/ft² ·hr ·°F (W/m² K)
R-19.2 (3.38)	R-5.7 (1.01)	0.175 (0.99)

[2] R-15 back pan insulation

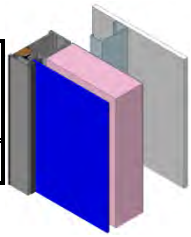

Transition Joint Linear Transmittance

R ft²·hr·°F / Btu (m² K / W)	U Btu/ft² ·hr ·°F (W/m² K)	ψ Btu/ft hr °F (W/m K)
R-8.0 (1.41)	0.125 (0.71)	0.082 (0.142)

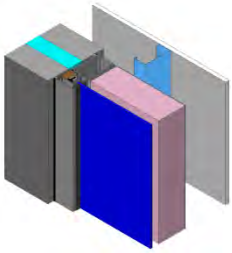

Temperature Indices

T_{i1}	0.62	Min T on interior concrete wall, at mullion
T_{i2}	0.83	Max T on interior concrete wall, away from mullion
T_{i3}	0.43	Min T in air cavity, at mullion

Detail 7.4.3

Interior Insulated Concrete Mass Wall – Conventional Curtain Wall Transition

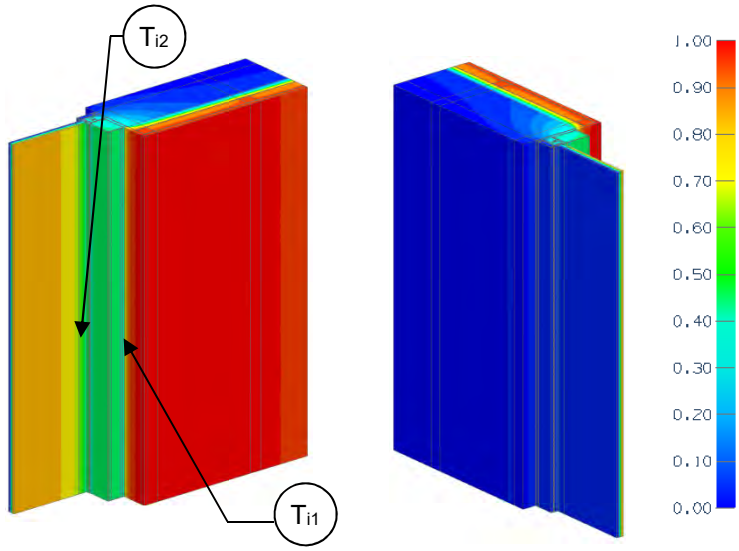

View from Interior View from Exterior

Thermal Performance Indicators

Assembly 1D (Nominal) R-Value	R_{1D}	R-2.9 (0.50 RSI) + exterior insulation
Transmittance / Resistance without Anomaly	U_g, U_w, R_w	"clear wall" U- and R-value for: g = curtain wall w = concrete assembly
Transmittance / Resistance	U, R	U- and R-values for overall assembly
Surface Temperature Index[1]	T_i	0 = exterior temperature 1 = interior temperature
Linear Transmittance	ψ	Incremental increase in transmittance per linear length of curtain wall transition

[1]Assumptions and limitations for surface temperatures identified in ASHRAE 1365-RP

Nominal (1D) vs. Assembly Performance Indicators

Base Assembly – Wall

Exterior Insulation 1D R-Value (RSI)	R_{1D} ft²·hr·°F / Btu (m² K / W)	R_w ft²·hr·°F / Btu (m² K / W)	U_w Btu/ft² ·hr ·°F (W/m² K)
R-10 (1.76)	R-13.0 (2.29)	R-12.9 (2.26)	0.078 (0.44)

Base Assembly – Curtain Wall Glazing

$U_{centre\ of\ glazing}$ Btu/ft² ·hr ·°F (W/m² K)	U_g Btu/ft² ·hr ·°F (W/m² K)
0.321 (1.82)	0.476 (2.70)

Curtain Wall Transition Linear Transmittance

Exterior Insulation 1D R-Value (RSI)	R ft²·hr·°F / Btu (m² K / W)	U Btu/ft² ·hr ·°F (W/m² K)	ψ Btu/ft hr °F (W/m K)
R-10 (1.76)	R-3.7 (0.64)	0.274 (1.55)	0.171 (0.295)

Temperature Indices

T_{i1}	0.44	Min T on frame
T_{i2}	0.43	Min T on glazing

Detail 7.4.4

Interior Insulated Concrete Mass Wall – Thermally Broken Curtain Wall Transition

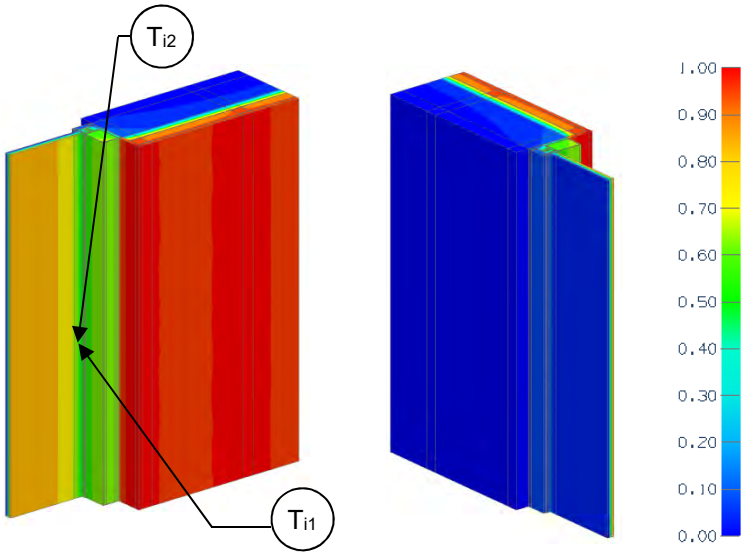

View from Interior View from Exterior

Thermal Performance Indicators

Assembly 1D (Nominal) R-Value	R_{1D}	R-2.9 (0.50 RSI) + exterior insulation
Transmittance / Resistance without Anomaly	U_g, U_w, R_w	"clear wall" U- and R-value for: g = curtain wall w = concrete assembly
Transmittance / Resistance	U, R	U- and R-values for overall assembly
Surface Temperature Index[1]	T_i	0 = exterior temperature 1 = interior temperature
Linear Transmittance	ψ	Incremental increase in transmittance per linear length of curtain wall transition

[1]Assumptions and limitations for surface temperatures identified in ASHRAE 1365-RP

Nominal (1D) vs. Assembly Performance Indicators

Base Assembly – Wall

Exterior Insulation 1D R-Value (RSI)	R_{1D} ft²·hr·°F / Btu (m² K / W)	R_w ft²·hr·°F / Btu (m² K / W)	U_w Btu/ft² ·hr ·°F (W/m² K)
R-10 (1.76)	R-13.0 (2.29)	R-12.9 (2.26)	0.078 (0.44)

Base Assembly – Curtain Wall

$U_{centre\ of\ glazing}$ Btu/ft² ·hr ·°F (W/m² K)	U_g Btu/ft² ·hr ·°F (W/m² K)
0.321 (1.82)	0.476 (2.70)

Curtain Wall Transition Linear Transmittance

Exterior Insulation 1D R-Value (RSI)	R ft²·hr·°F / Btu (m² K / W)	U Btu/ft² ·hr ·°F (W/m² K)	ψ Btu/ft hr °F (W/m K)
R-10 (1.76)	R-4.2 (0.74)	0.237 (1.34)	0.050 (0.086)

Temperature Indices

T_{i1}	0.52	Min T on frame
T_{i2}	0.50	Min T on glazing

Detail 7.4.5

Precast Sandwich Panel Wall Assembly – Tigerloc Thermally Broken Curtain Wall Transition

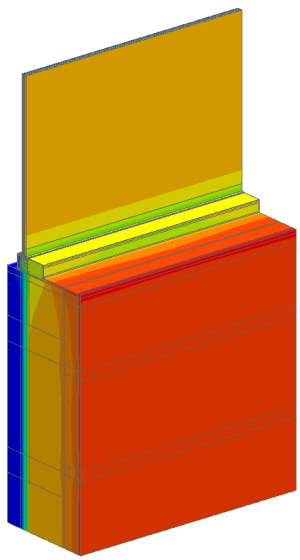

View from Interior

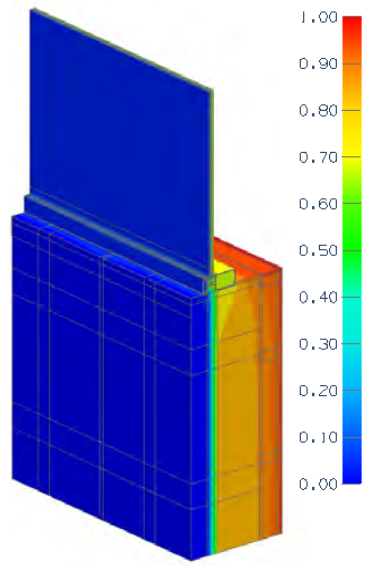

View from Exterior

Thermal Performance Indicators

Assembly 1D (Nominal) R-Value	R_{1D}	Nominal thermal resistance of wall
Transmittance / Resistance without Anomaly	U_w, R_w, U_g,	"clear field" U- and R-value for: w = wall without panel joint g = glazing
Transmittance / Resistance	U_j, R_j, U_{cw}, R_{cw},	U- and R-values for: j = wall with joint panel cw = curtain wall
Surface Temperature Index[1]	T_i	0 = exterior temperature 1 = interior temperature
Linear Transmittance	ψ_j, ψ_{cw},	Incremental increase in transmittance per linear length of anomaly

[1]Assumptions and limitations for surface temperatures identified in ASHRAE 1365-RP

Nominal (1D) vs. Assembly Performance Indicators

Base Assembly – Wall

Sandwich Panel Insulation 1D R-value (RSI)	R_{1D} ft²·hr·°F / Btu (m² K / W)	R_w ft²·hr·°F / Btu (m² K / W)	U_w Btu/ft² ·hr ·°F (W/m² K)
R-10 (1.76)	R-13.1 (2.31)	R-12.8 (2.26)	0.078 (0.44)
R-15 (2.64)	R-18.1 (3.19)	R-17.7 (3.12)	0.056 (0.32)
R-20 (3.52)	R-23.1 (4.07)	R-22.6 (3.98)	0.044 (0.25)

Base Assembly – Curtain Wall Glazing

$U_{centre\ of\ glazing}$ Btu/ft² ·hr ·°F (W/m² K)	U_g Btu/ft² ·hr ·°F (W/m² K)
0.32 (1.82)	0.389 (2.21)

Panel Joint Linear Transmittance

Sandwich Panel Insulation 1D R-value (RSI)	R_j ft²·hr·°F / Btu (m² K / W)	U_j Btu/ft² ·hr ·°F (W/m² K)	ψ_j Btu/ft ·hr ·°F (W/m K)
R-10 (1.76)	R-9.3 (1.65)	0.107 (0.61)	0.099 (0.17)
R-15 (2.64)	R-12.0 (2.11)	0.084 (0.47)	0.092 (0.16)
R-20 (3.52)	R-14.5 (2.56)	0.069 (0.39)	0.084 (0.15)

Curtain Wall Transition Linear Transmittance

Sandwich Panel Insulation 1D R-value (RSI)	R_{cw} ft²·hr·°F / Btu (m² K / W)	U_{cw} Btu/ft² ·hr ·°F (W/m² K)	ψ_{cw} Btu/ft ·hr ·°F (W/m K)
R-10 (1.76)	R-4.2 (0.75)	0.236 (1.34)	0.041 (0.071)
R-15 (2.64)	R-4.5 (0.79)	0.224 (1.27)	0.044 (0.076)
R-20 (3.52)	R-4.6 (0.82)	0.215 (1.22)	0.044 (0.077)

Detail 7.4.6

Highly Insulated Precast Concrete Sandwich Panel Wall Assembly – High Performance Aluminum Window Sill Detail

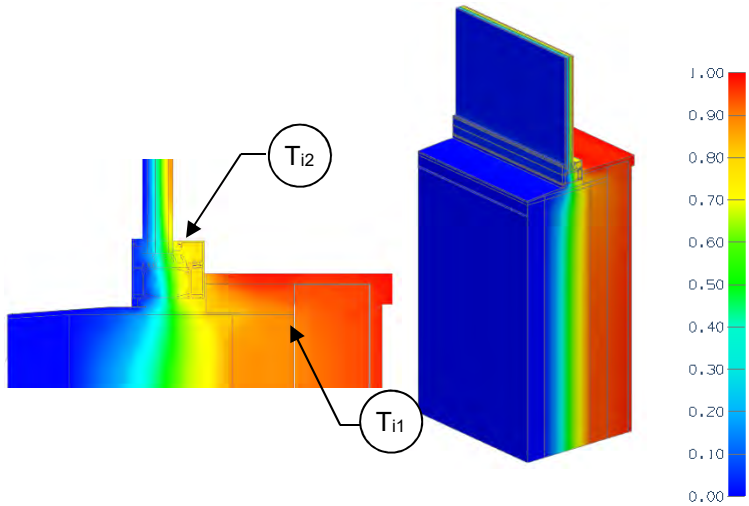

Side View View from Exterior

Thermal Performance Indicators

Assembly 1D (Nominal) R-Value	R_{1D}	R-2.76 (0.49 RSI) + insulation
Transmittance / Resistance without Anomaly	U_w, R_w, U_g, R_g	"clear field" U- and R-value w = wall g = glazing
Transmittance / Resistance	U, R	U- and R-values for the overall assembly
Linear Transmittance	Ψ	Incremental increase in transmittance for sill detail

Scenarios

Scenario	Sill Detail Insulation
A	Spray foam below frame and mineral wool behind frame
B	Aerogel below frame and mineral wool behind frame
C	Spray foam below frame and no insulation behind frame

Nominal (1D) vs. Assembly Performance Indicators

Base Assembly – Wall

Wall Insulation R-Value/in	Wall Insulation 1D R-Value (RSI)	R_{1D} ft²·hr·°F / Btu (m² K / W)	R_w ft²·hr·°F / Btu (m² K / W)	U_w Btu/ft² ·hr ·°F (W/m² K)
5	R-40 (7.04)	R-42.8 (7.53)	R-42.3 (7.45)	0.024 (0.13)
6	R-48 (8.45)	R-50.8 (8.94)	R-50.3 (8.86)	0.020 (0.11)
7	R-56 (9.86)	R-58.8 (10.35)	R-58.3 (10.27)	0.017 (0.10)

Base Assembly – Glazing

$U_{centre\ of\ glazing}$ Btu/ft² ·hr ·°F (W/m² K)	U_{frame} Btu/ft² ·hr ·°F (W/m² K)	Ψ_{spacer} Btu/ft ·hr ·°F (W/m K)	U_g Btu/ft² ·hr ·°F (W/m² K)
0.123 (0.70)	0.261 (1.48)	0.040 (0.069)	0.172 (0.98)

Sill Linear Transmittance

Scenario	Wall Insulation R-Value/in	Wall Insulation 1D R-Value (RSI)	R ft²·hr·°F / Btu (m² K / W)	U Btu/ft² ·hr ·°F (W/m² K)	Ψ Btu/ft·hr·°F (W/mK)
A	5	R-42.8 (7.53)	R-13.7 (2.41)	0.073 (0.42)	0.009 (0.016)
	6	R-50.8 (8.94)	R-14.1 (2.49)	0.071 (0.40)	0.010 (0.018)
	7	R-58.8 (10.35)	R-14.5 (2.55)	0.069 (0.39)	0.011 (0.019)
B	6	R-50.8 (8.94)	R-14.2 (2.50)	0.070 (0.40)	0.008 (0.015)
C	6	R-50.8 (8.94)	R-14.0 (2.46)	0.072 (0.41)	0.014 (0.023)

Temperature Indices

	A R42.8	A R50.8	A R58.8	B R50.8	C R50.8	
T_{i1}	0.91	0.91	0.92	0.92	0.92	Min T on interior concrete precast sandwich panel surface, below window between studs
T_{i2}	0.80	0.80	0.80	0.81	0.83	Min T on window frame, at edge of glass

Detail 7.4.7

Highly Insulated Precast Concrete Sandwich Panel Wall Assembly – High Performance Aluminum Window Head Detail

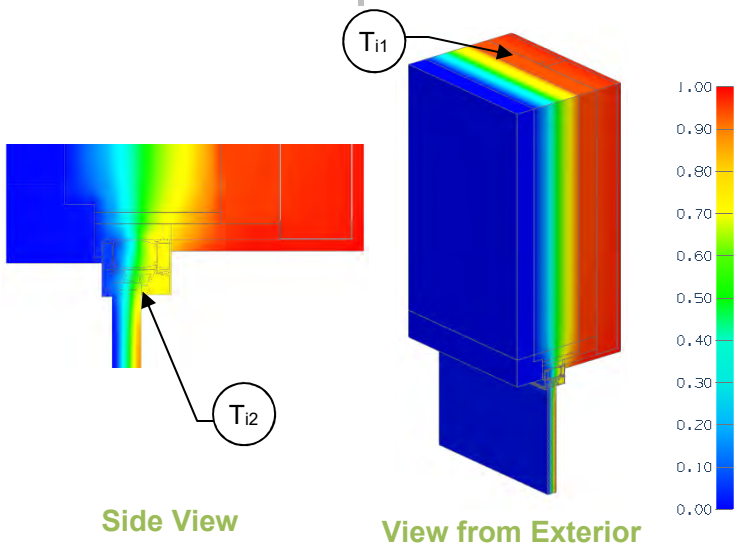

Thermal Performance Indicators

Assembly 1D (Nominal) R-Value	R_{1D}	R-2.76 (0.49 RSI) + insulation
Transmittance / Resistance without Anomaly	U_w, R_w, U_g, R_g	"clear field" U- and R-value w = wall g = glazing
Transmittance / Resistance	U, R	U- and R-values for the overall assembly
Linear Transmittance	Ψ	Incremental increase in transmittance for sill detail

Scenarios

Scenario	Head/Jamb Detail Insulation
A	Spray Foam around opening
B	Aerogel around opening

Nominal (1D) vs. Assembly Performance Indicators

Base Assembly – Wall

Wall Insulation R-Value/in	Wall Insulation 1D R-Value (RSI)	R_{1D} ft²·hr·°F / Btu (m² K / W)	R_w ft²·hr·°F / Btu (m² K / W)	U_w Btu/ft² ·hr ·°F (W/m² K)
5	R-40 (7.04)	R-42.8 (7.53)	R-42.3 (7.45)	0.024 (0.13)
6	R-48 (8.45)	R-50.8 (8.94)	R-50.3 (8.86)	0.020 (0.11)
7	R-56 (9.86)	R-58.8 (10.35)	R-58.3 (10.27)	0.017 (0.10)

Base Assembly – Glazing

$U_{centre\ of\ glazing}$ Btu/ft² ·hr ·°F (W/m² K)	U_{frame} Btu/ft² ·hr ·°F (W/m² K)	$Ψ_{spacer}$ Btu/ft ·hr ·°F (W/m K)	U_g Btu/ft² ·hr ·°F (W/m² K)
0.123 (0.70)	0.261 (1.48)	0.040 (0.069)	0.172 (0.98)

Head and Jamb Linear Transmittance

Scenario	Wall Insulation R-Value/in	Wall Insulation 1D R-Value (RSI)	R ft²·hr·°F / Btu (m² K / W)	U Btu/ft² ·hr ·°F (W/m² K)	Ψ Btu/ft·hr·°F (W/mK)
A	5	R-42.8 (7.53)	R-13.9 (2.44)	0.072 (0.41)	0.004 (0.007)
	6	R-50.8 (8.94)	R-14.4 (2.53)	0.070 (0.40)	0.004 (0.007)
	7	R-58.8 (10.35)	R-14.7 (2.60)	0.068 (0.39)	0.005 (0.008)
B	6	R-50.8 (8.94)	R-14.4 (2.54)	0.069 (0.39)	0.003 (0.006)

Temperature Indices

	A R42.8	A R50.8	A R58.8	B R50.8	
T_{i1}	0.95	0.96	0.96	0.96	Min T on interior concrete precast sandwich panel surface, away from window between studs
T_{i2}	0.77	0.77	0.77	0.77	Min T on window frame, at edge of glass

Detail 7.5.1

Exterior Insulated Concrete Drained EIFS Wall Assembly – Concrete Parapet & Slab Intersection

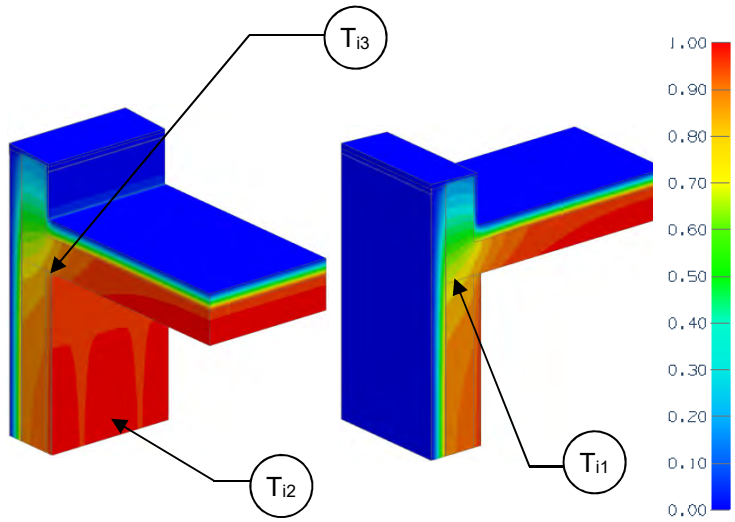

View from Interior View from Exterior

Thermal Performance Indicators

Assembly 1D (Nominal) R-Value	R_{1D}	R-3.0 (0.53 RSI) + exterior insulation
Transmittance / Resistance without Anomaly	U_r, R_r, U_w, R_w	"clear wall" U- and R-value: r = roof w = wall
Transmittance / Resistance	U, R	U- and R-values for overall assembly
Surface Temperature Index[1]	T_i	0 = exterior temperature 1 = interior temperature
Linear Transmittance	ψ	Incremental increase in transmittance per linear length of parapet

[1]Assumptions and limitations for surface temperatures identified in ASHRAE 1365-RP

Nominal (1D) vs. Assembly Performance Indicators

Base Assembly – Wall

Exterior Insulation 1D R-Value (RSI)	R_{1D} ft²·hr·°F / Btu (m² K / W)	R_w ft²·hr·°F / Btu (m² K / W)	U_w Btu/ft² ·hr ·°F (W/m² K)
R-15 (2.64)	R-18.0 (3.17)	R-17.6 (3.10)	0.057 (0.32)

Base Assembly - Roof

Roof Exterior Insulation 1D R-Value (RSI)	R_r ft² hr °F / Btu (m² K / W)	U_r Btu/ft² ·hr ·°F (W/m² K)
R-20 (3.52)	R-21.9 (3.86)	0.046 (0.26)

Parapet Linear Transmittance

Exterior Insulation 1D R-Value (RSI)	R ft²·hr·°F / Btu (m² K / W)	U Btu/ft² ·hr ·°F (W/m² K)	ψ Btu/ft hr °F (W/m K)
R-15 (2.64)	R-8.6 (1.51)	0.117 (0.66)	0.231 (0.400)

Temperature Indices

T_{i1}	0.77	Min T on concrete interior surface, at concrete roof slab intersection
T_{i2}	0.88	Max T on concrete interior surface at mid-wall
T_{i3}	0.82	Min T on concrete ceiling, at drywall intersection, exposed to interior air

Detail 7.5.2

Exterior Insulated Concrete Drained EIFS Wall Assembly – Insulated Concrete Parapet & Slab Intersection

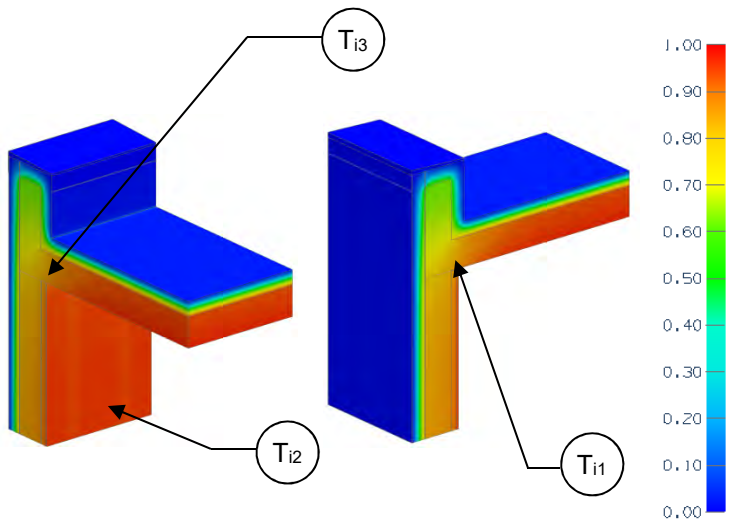

View from Interior View from Exterior

Thermal Performance Indicators

Assembly 1D (Nominal) R-Value	R_{1D}	R-3.0 (0.53 RSI) + exterior insulation
Transmittance / Resistance without Anomaly	U_r, R_r, U_w, R_w	"clear wall" U- and R-value: r = roof w = wall
Transmittance / Resistance	U, R	U- and R-values for overall assembly
Surface Temperature Index[1]	T_i	0 = exterior temperature 1 = interior temperature
Linear Transmittance	ψ	Incremental increase in transmittance per linear length of parapet

[1]Assumptions and limitations for surface temperatures identified in ASHRAE 1365-RP

Nominal (1D) vs. Assembly Performance Indicators

Base Assembly – Wall

Exterior Insulation 1D R-Value (RSI)	R_{1D} ft²·hr·°F / Btu (m² K / W)	R_w ft²·hr·°F / Btu (m² K / W)	U_w Btu/ft² ·hr ·°F (W/m² K)
R-15 (2.64)	R-18.0 (3.17)	R-17.6 (3.10)	0.057 (0.32)

Base Assembly - Roof

Roof Exterior Insulation 1D R-Value (RSI)	R_r ft² hr °F / Btu (m² K / W)	U_r Btu/ft² ·hr ·°F (W/m² K)
R-20 (3.52)	R-21.9 (3.86)	0.046 (0.26)

Parapet Linear Transmittance

Exterior Insulation 1D R-Value (RSI)	R ft²·hr·°F / Btu (m² K / W)	U Btu/ft² ·hr ·°F (W/m² K)	ψ Btu/ft hr °F (W/m K)
R-15 (2.64)	R-10.2 (1.80)	0.098 (0.55)	0.125 (0.217)

Temperature Indices

T_{i1}	0.83	Min T on concrete interior surface, at concrete roof slab intersection
T_{i2}	0.89	Max T on concrete interior surface, at mid-wall
T_{i3}	0.87	Min T on concrete ceiling, at drywall intersection, exposed to interior air

Detail 7.5.3

Interior Insulated Concrete Mass Wall with 1 5/8″ Steel Stud (16″ o.c) Supporting Interior Finish – Concrete Parapet & Roof Intersection

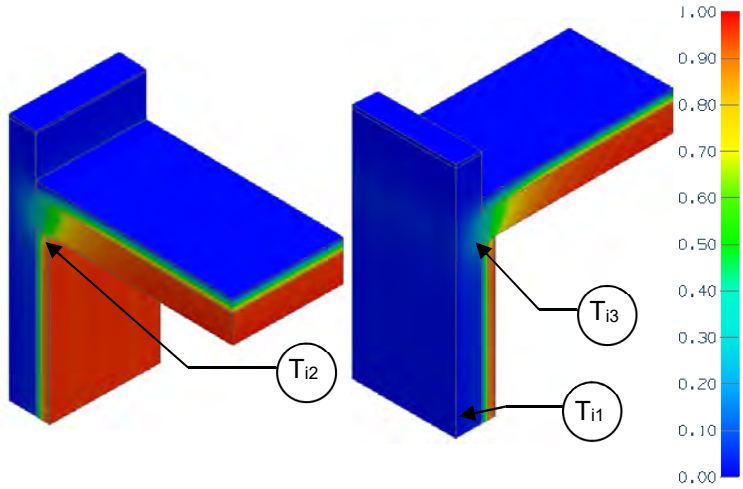

View from Interior View from Exterior

Thermal Performance Indicators

Assembly 1D (Nominal) R-Value	R_{1D}	Nominal thermal resistance of wall assembly
Transmittance / Resistance without Anomaly	U_r, R_r, U_w, R_w	"clear field" U- and R-values: r = roof w = wall
Transmittance / Resistance	U, R	U- and R-values for overall assembly
Surface Temperature Index[1]	T_i	0 = exterior temperature 1 = interior temperature
Linear Transmittance	ψ	Incremental increase in transmittance per linear length of parapet

[1]Assumptions and limitations for surface temperatures identified in ASHRAE 1365-RP

Nominal (1D) vs. Assembly Performance Indicators

Base Assembly – Wall

R_{1D} ft²·hr·°F / Btu (m² K / W)	R_w ft²·hr·°F / Btu (m² K / W)	U_w Btu/ft² ·hr ·°F (W/m² K)
R-13.9 (2.44)	R-13.5 (2.37)	0.074 (0.42)

Base Assembly – Roof

Roof Exterior Insulation 1D R-Value (RSI)	R_r ft²·hr·°F / Btu (m² K / W)	U_r Btu/ft² ·hr ·°F (W/m² K)
R-20 (3.52)	R-21.9 (3.86)	0.046 (0.26)

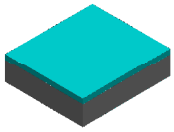

Parapet Linear Transmittance

R ft²·hr·°F / Btu (m² K / W)	U Btu/ft² ·hr ·°F (W/m² K)	ψ Btu/ft hr °F (W/m K)
R-8.94 (1.57)	0.112 (0.64)	0.449 (0.777)

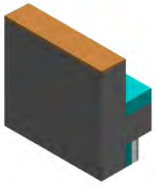

Temperature Indices

T_{i1}	0.06	Min T on concrete wall, between studs, away from ceiling
T_{i2}	0.27	Max T on concrete wall, at wall/roof intersection
T_{i3}	0.59	Min T on interior ceiling, at gypsum board, between studs

Detail 7.5.4

Precast Sandwich Panel Wall Assembly with 3 5/8″ Steel Stud (16″ o.c.) – Steel Roof Deck with Open Web Steel Joist & Parapet Intersection

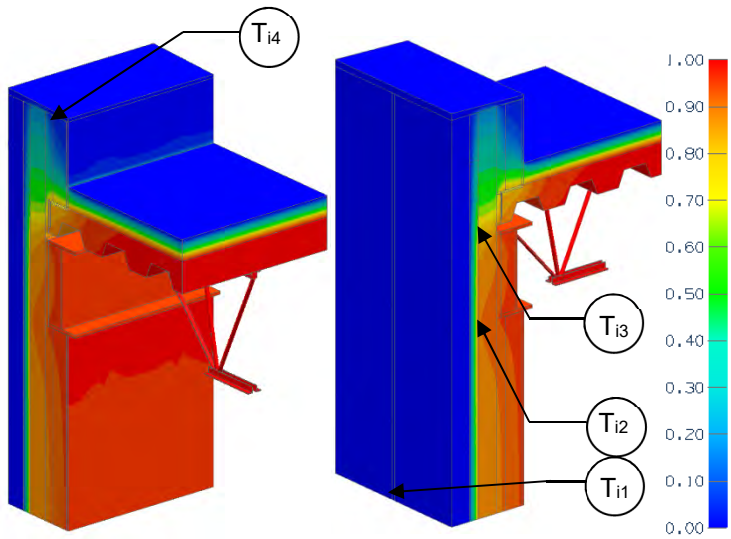

View from Interior View from Exterior

Thermal Performance Indicators

Assembly 1D (Nominal) R-Value	R_{1D}	R-3.9 (0.69 RSI) + sandwich panel insulation
Transmittance / Resistance without Anomaly	U_r, R_r, U_w, R_w	"clear field" U- and R-values: r = roof w = wall
Transmittance / Resistance	U_j, R_j, U_p, R_p	U- and R-values for: j = panel joint p = parapet
Surface Temperature Index[1]	T_i	0 = exterior temperature 1 = interior temperature
Linear Transmittance	ψ_j, ψ_p	Incremental increase in transmittance per linear length of anomaly

[1]Assumptions and limitations for surface temperatures identified in ASHRAE 1365-RP

Nominal (1D) vs. Assembly Performance Indicators

Base Assembly – Wall

R_{1Dw} ft²·hr·°F / Btu (m² K / W)	R_w ft²·hr·°F / Btu (m² K / W)	U_w Btu/ft² ·hr ·°F (W/m² K)
R-13.9 (2.45)	R-12.6 (2.22)	0.079 (0.45)

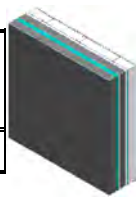

Panel Joint Linear Transmittance

R_j ft²·hr·°F / Btu (m² K / W)	U_j Btu/ft² ·hr ·°F (W/m² K)	ψ_j Btu/ft hr °F (W/m K)
R-11.7(2.05)	0.086 (0.49)	0.026 (0.046)

Base Assembly - Roof

Roof Exterior Insulation 1D R-Value (RSI)	R_r ft² hr °F / Btu (m² K / W)	U_r Btu/ft² ·hr ·°F (W/m² K)
R-20 (3.52)	R-21.9 (3.86)	0.046(0.26)

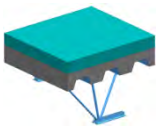

Parapet Linear Transmittance

R_p ft²·hr·°F / Btu (m² K / W)	U_p Btu/ft² ·hr ·°F (W/m² K)	ψ_p Btu/ft hr °F (W/m K)
R-8.2 (1.43)	0.123 (0.70)	0.375 (0.650)

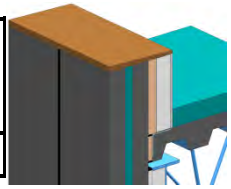

Temperature Indices

T_{i1}	0.82	Min T on concrete wall, at panel joint, away from roof
T_{i2}	0.89	Max T on concrete wall, below Ibeam
T_{i3}	0.77	Min T in interior surface, on concrete, away from joist
T_{i4}	0.19	Min T on concrete parapet, and panel edge and wood block

Detail 7.5.5

Precast Sandwich Panel – Steel Roof Deck with Open Web Steel Joist & Parapet Intersection

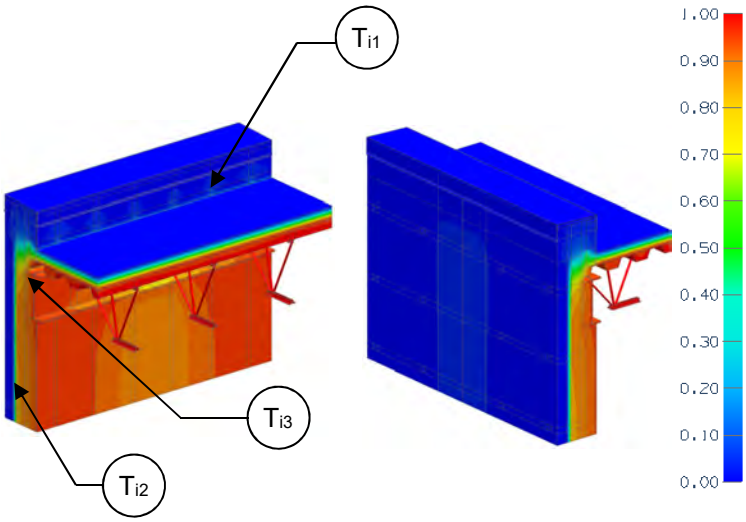

View from Interior View from Exterior

Thermal Performance Indicators

Assembly 1D (Nominal) R-Value	R_{1D}	R-3.9 (0.69 RSI) + sandwich panel insulation
Transmittance / Resistance without Anomaly	U_r, R_r, U_w, R_w	"clear wall" U- and R-values: r = roof w = sandwich panel
Transmittance / Resistance	U_j, R_j U_p, R_p	U and R-values for: j = sandwich panel with panel joint p = parapet
Surface Temperature Index[1]	T_i	0 = exterior temperature 1 = interior temperature
Linear Transmittance	ψ_j, ψ_p	Incremental increase in transmittance per linear length of: j = panel joint p = parapet transition

[1]Assumptions and limitations for surface temperatures identified in ASHRAE 1365-RP

Nominal (1D) vs. Assembly Performance Indicators

Base Assembly – Wall

Sandwich Panel Insulation 1D R-Value (RSI)	R_{1D} ft²·hr·°F / Btu (m² K / W)	R_w ft²·hr·°F / Btu (m² K / W)	U_w Btu/ft² ·hr ·°F (W/m² K)
R-10 (1.76)	R-13.9 (2.45)	R-12.6 (2.22)	0.079 (0.45)

Panel Joint Linear Transmittance

R_j ft²·hr·°F / Btu (m² K / W)	U_j Btu/ft² ·hr ·°F (W/m² K)	ψ_j Btu/ft ·hr·°F (W/m K)
R-6.2 (1.10)	0.160 (0.91)	0.653 (1.130)

Base Assembly – Roof

Roof Exterior Insulation 1D R-Value (RSI)	R_r ft² hr °F / Btu (m² K / W)	U_r Btu/ft² ·hr ·°F (W/m² K)
R-20 (3.52)	R-21.9 (3.86)	0.046 (0.26)

Parapet Linear Transmittance

Sandwich Panel Insulation 1D R-Value (RSI)	R_p ft²·hr·°F / Btu (m² K / W)	U_p Btu/ft² ·hr ·°F (W/m² K)	ψ_p Btu/ft ·hr·°F (W/m K)
R-10 (1.76)	R-3.7 (0.65)	0.273 (1.55)	1.160 (2.008)

Temperature Indices

T_{i1}	0.36	Min T on sandwich panel, at concrete edge and roof insulation intersection
T_{i2}	0.85	Max T on sandwich panel, at centre of panel away from concrete edges
T_{i3}	0.53	Min T on roof sheathing, along sandwich panel intersection

Detail 7.5.6

Precast Wall Assembly with 3 5/8″ x 1 5/8″ Steel Stud (16″ o.c) and Rigid Insulation Outboard of Studs – Parapet & Roof Intersection

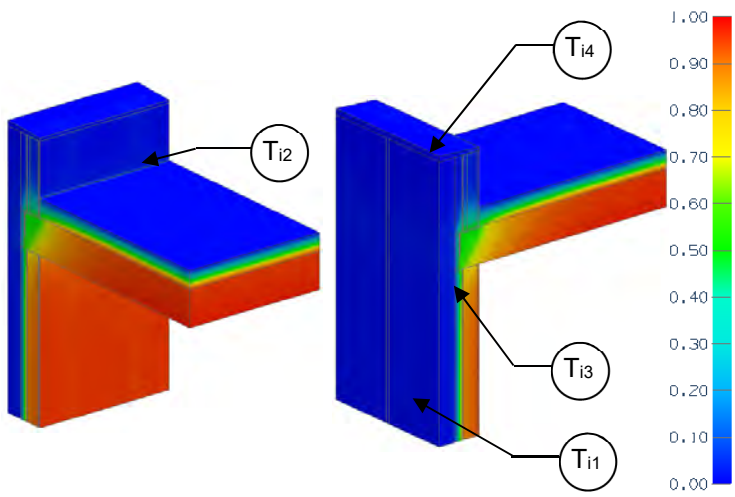

View from Interior View from Exterior

Thermal Performance Indicators

Assembly 1D (Nominal) R-Value	R_{1D}	Nominal thermal resistance
Transmittance / Resistance without Anomaly	U_r, R_r, U_w, R_w	"clear field" U- and R-values: r = roof w = wall
Transmittance / Resistance	U, R	U and R-values for the assembly
Surface Temperature Index[1]	T_i	0 = exterior temperature 1 = interior temperature
Linear Transmittance	ψ	Incremental increase in transmittance per linear length of parapet

[1]Assumptions and limitations for surface temperatures identified in ASHRAE 1365-RP

Nominal (1D) vs. Assembly Performance Indicators

Base Assembly – Wall

R_{1D} ft²·hr·°F / Btu (m² K / W)	R_w ft²·hr·°F / Btu (m² K / W)	U_w Btu/ft² ·hr ·°F (W/m² K)
R-13.0 (2.29)	R-12.9 (2.26)	0.078 (0.44)

Base Assembly - Roof

Roof Exterior Insulation 1D R-Value (RSI)	R_r ft² hr °F / Btu (m² K / W)	U_r Btu/ft² ·hr ·°F (W/m² K)
R-20 (3.52)	R-21.9 (3.86)	0.046 (0.26)

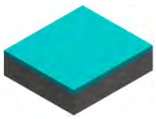

Parapet Linear Transmittance

R ft²·hr·°F / Btu (m² K / W)	U Btu/ft² ·hr ·°F (W/m² K)	ψ Btu/ft hr °F (W/m K)
R-9.1 (1.60)	0.110 (0.63)	0.334 (0.579)

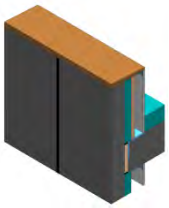

[2] Panel edges (caulked joints between panels) had negligible linear transmittance effects so values not presented

Temperature Indices

T_{i1}	0.04	Min T on concrete wall, between studs, away from roof
T_{i2}	0.16	Max T on concrete wall, at slot anchor
T_{i3}	0.73	Min T on ceiling, at gypsum board, at studs
T_{i4}	0.01	Min T on concrete parapet, at wood blocking

Detail 7.5.7

Precast Wall Assembly with 3 5/8″ x 1 5/8″ Steel Stud (16″ o.c) and Rigid Insulation Outboard of Studs – Parapet & Roof Intersection with Thermal Break under Parapet Stud Cavity and At Anchors

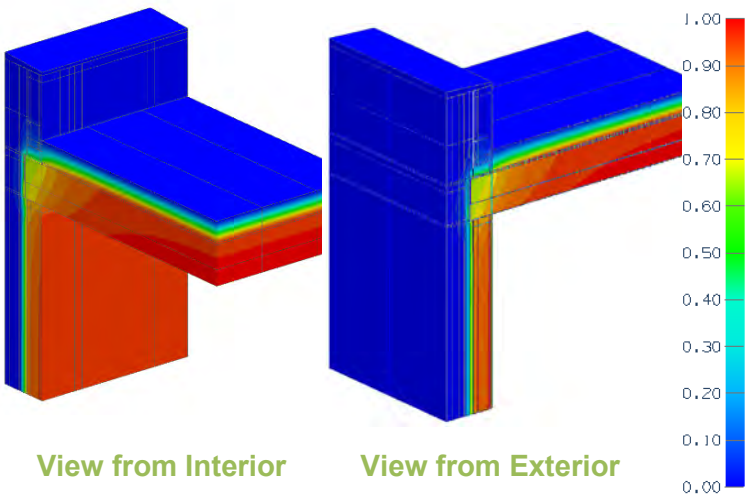

View from Interior View from Exterior

Thermal Performance Indicators

Assembly 1D (Nominal) R-Value	R_{1D}	R-2.8 (0.49 RSI) + Exterior Insulation for wall
Transmittance / Resistance without Anomaly	U_r, R_r, U_w, R_w	"clear field" U- and R-values: r = roof w = wall
Transmittance / Resistance	U, R	U and R-values for overall assembly
Surface Temperature Index	T_i	0 = exterior temperature 1 = interior temperature
Linear Transmittance	ψ	Incremental increase in transmittance per linear length of parapet

[1]Assumptions and limitations for surface temperatures identified in ASHRAE 1365-RP

Scenario

Scenario	
1	Armatherm 500 beneath stud cavity
2	Armatherm 500 beneath stud cavity, 3/8" FRR at anchors

Nominal (1D) vs. Assembly Performance Indicators

Base Assembly – Wall

Exterior Insulation 1D R-Value (RSI)	R_{1D} ft²·hr·°F / Btu (m² K / W)	R_w ft²·hr·°F / Btu (m² K / W)	U_w Btu/ft² ·hr ·°F (W/m² K)
R-10 (1.76)	R-12.8 (2.25)	R-12.2 (2.15)	0.082 (0.47)

Base Assembly - Roof

Roof Exterior Insulation 1D R-Value (RSI)	R_r ft² hr °F / Btu (m² K / W)	U_r Btu/ft² ·hr ·°F (W/m² K)
R-20 (3.52)	R-21.9 (3.86)	0.046 (0.26)

Parapet Linear Transmittance

Scenario	R ft²·hr·°F / Btu (m² K / W)	U Btu/ft² ·hr ·°F (W/m² K)	ψ Btu/ft hr °F (W/m K)
1	R-10.6 (1.86)	0.095 (0.54)	0.227 (0.393)
2	R-10.7 (1.89)	0.093 (0.53)	0.125 (0.216)

Panel edges (caulked joints between panels) had negligible linear transmittance effects so values not presented

Detail 7.5.8

Exterior Insulated Concrete Block Wall Assembly with Masonry Ties Supporting Brick Veneer – Parapet & Roof Intersection

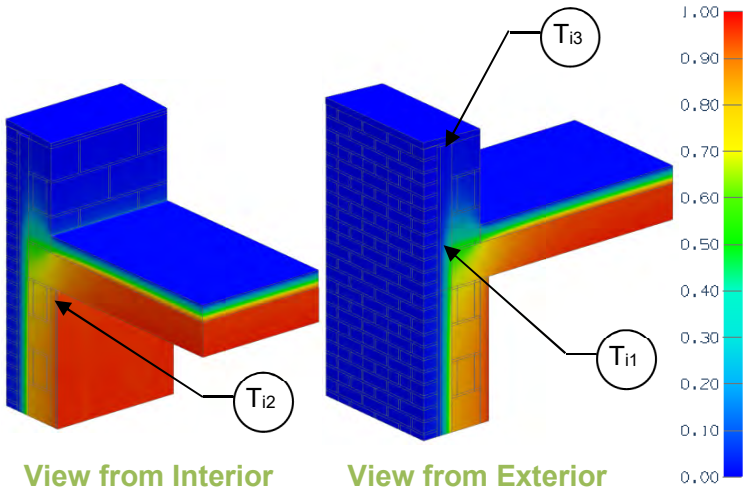

Thermal Performance Indicators

Assembly 1D (Nominal) R-Value	R_{1D}	R-5.6 (0.97 RSI) + exterior insulation
Transmittance / Resistance without Anomaly	U_r, R_r, U_w, R_w	"clear field" U- and R-values: r = roof w = wall
Transmittance / Resistance	U, R	U and R-values for the assembly
Surface Temperature Index[1]	T_i	0 = exterior temperature 1 = interior temperature
Linear Transmittance	ψ	Incremental increase in transmittance per linear length of parapet

[1]Assumptions and limitations for surface temperatures identified in ASHRAE 1365-RP

Nominal (1D) vs. Assembly Performance Indicators

Base Assembly – Wall

Exterior Insulation 1D R-Value (RSI)	R_{1D} ft²·hr·°F / Btu (m² K / W)	R_w ft²·hr·°F / Btu (m² K / W)	U_w Btu/ft² ·hr ·°F (W/m² K)
R-5 (0.88)	R-10.6 (1.86)	R-10.4 (1.83)	0.096 (0.55)
R-15 (2.64)	R-20.6 (3.62)	R-17.8 (3.13)	0.056 (0.32)
R-25 (4.40)	R-30.6 (5.38)	R-23.7 (4.17)	0.042 (0.24)

Base Assembly – Roof

Roof Exterior Insulation 1D R-Value (RSI)	R_r ft²·hr·°F / Btu (m² K / W)	U_r Btu/ft² ·hr ·°F (W/m² K)
R-20 (3.52)	R-21.9 (3.86)	0.046 (0.26)

Parapet Linear Transmittance

Exterior Insulation 1D R-Value (RSI)	R ft²·hr·°F / Btu (m² K / W)	U Btu/ft² ·hr ·°F (W/m² K)	ψ Btu/ft hr °F (W/m K)
R-5 (0.88)	10.0 (1.8)	0.100 (0.57)	0.238 (0.412)
R-15 (2.64)	12.2 (2.1)	0.082 (0.47)	0.180 (0.311)
R-25 (4.40)	13.1 (2.3)	0.076 (0.43)	0.236 (0.408)

Temperature Indices

	R5	R15	R25	
T_{i1}	0.57	0.66	0.68	Min T on exterior face of concrete block wall, at roof/gypsum intersection and air filled blocks
T_{i2}	0.78	0.81	0.82	Min T on interior surfaces, at ceiling/gypsum intersection, at studs
T_{i3}	0.01	0.01	0.01	Min T on concrete block parapet, at wood block and air filled concrete blocks

Detail 7.5.9

Precast Sandwich Panel – Steel Roof Deck with Open Web Steel Joist & Paraloc Thermally Broken Parapet Intersection

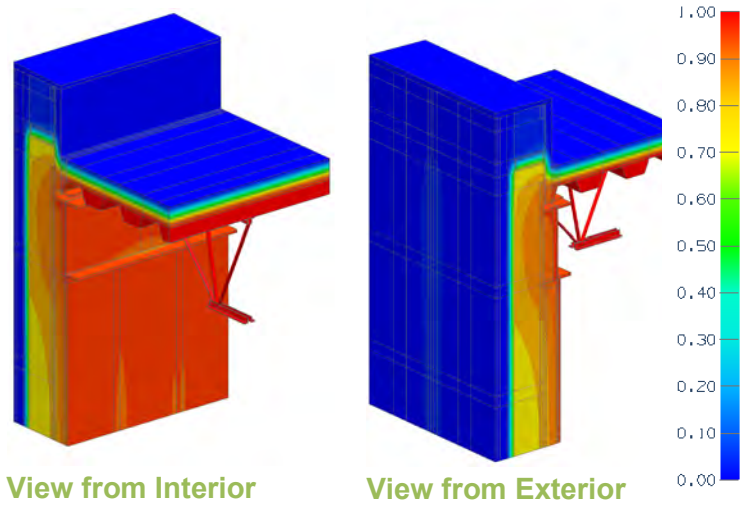

Thermal Performance Indicators

Assembly 1D (Nominal) R-Value	R_{1D}	R-3.1 (0.55 RSI) + sandwich panel insulation
Transmittance / Resistance without Anomaly	U_r, R_r, U_w, R_w,	"clear field" U- and R-values: r = roof w = wall
Transmittance / Resistance	U_j, R_j, U_p, R_p	U- and R-values for: j = panel joint p = parapet
Linear Transmittance	ψ_j, ψ_p	Incremental increase in transmittance per linear length of anomaly

Nominal (1D) vs. Assembly Performance Indicators

Base Assembly – Wall

Sandwich Panel Insulation 1D R-value (RSI)	R_{1D} ft²·hr·°F / Btu (m² K / W)	R_w ft²·hr·°F / Btu (m² K / W)	U_w Btu/ft² ·hr ·°F (W/m² K)
R-10 (1.76)	R-13.1 (2.31)	R-12.8 (2.26)	0.078 (0.44)
R-15 (2.64)	R-18.1 (3.19)	R-17.7 (3.12)	0.056 (0.32)
R-20 (3.52)	R-23.1 (4.07)	R-22.6 (3.98)	0.044 (0.25)

Base Assembly – Roof

Roof Exterior Insulation 1D R-value (RSI)	R_r ft²·hr·°F / Btu (m² K / W)	U_r Btu/ft² ·hr ·°F (W/m² K)
R-20 (3.52)	R-21.5 (3.79)	0.046 (0.26)

Panel Joint Linear Transmittance

Sandwich Panel Insulation 1D R-value (RSI)	R_j ft²·hr·°F / Btu (m² K / W)	U_j Btu/ft² ·hr ·°F (W/m² K)	ψ_j Btu/ft ·hr ·°F (W/m K)
R-10 (1.76)	R-9.3 (1.65)	0.107 (0.61)	0.099 (0.17)
R-15 (2.64)	R-12.0 (2.11)	0.084 (0.47)	0.092 (0.16)
R-20 (3.52)	R-14.5 (2.56)	0.069 (0.39)	0.084 (0.15)

Parapet Linear Transmittance

Sandwich Panel Insulation 1D R-value (RSI)	R_p ft²·hr·°F / Btu (m² K / W)	U_p Btu/ft² ·hr ·°F (W/m² K)	Ψ_p Btu/ft ·hr ·°F (W/m K)
R-10 (1.76)	R-9.1 (1.60)	0.110 (0.63)	0.184 (0.319)
R-15 (2.64)	R-11.1 (1.96)	0.090 (0.51)	0.145 (0.250)
R-20 (3.52)	R-13.0 (2.28)	0.077 (0.44)	0.120 (0.208)

Detail 7.5.10

Highly Insulated Precast Concrete Sandwich Panel Wall Assembly – Roof to Wall Intersection with Wood-Framed Parapet

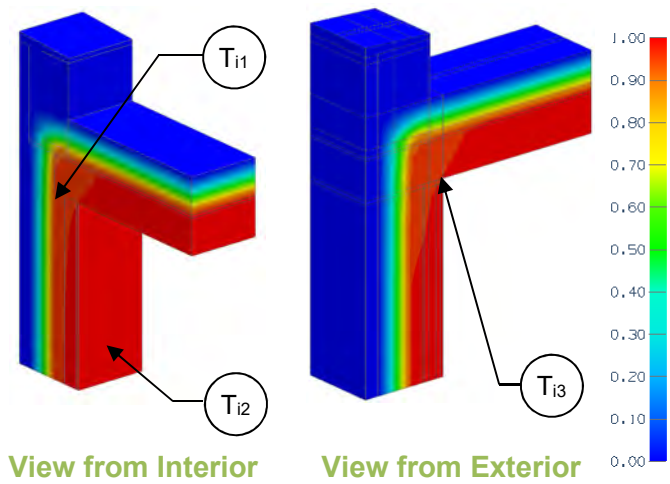

Thermal Performance Indicators

Assembly 1D (Nominal) R-Value	R_{1D}	R-2.76 (0.49 RSI) + insulation
Transmittance / Resistance without Anomaly	U_w, R_w, U_r, R_r	"clear field" U- and R-value w = wall r = roof
Transmittance / Resistance	U, R	U- and R-values for the overall assembly
Surface Temperature Index[1]	T_i	0 = exterior temperature 1 = interior temperature
Linear Transmittance	Ψ	Incremental increase in transmittance per length of parapet

[1]Assumptions and limitations for surface temperatures identified in ASHRAE 1365-RP

Nominal (1D) vs. Assembly Performance Indicators

Base Assembly – Wall

Wall Insulation R-Value/in	Wall Insulation 1D R-Value (RSI)	R_{1D} ft²·hr·°F / Btu (m² K / W)	R_w ft²·hr·°F / Btu (m² K / W)	U_w Btu/ft² ·hr ·°F (W/m² K)
5	R-40 (7.04)	R-42.8 (7.53)	R-42.3 (7.45)	0.024 (0.134)
6	R-48 (8.45)	R-50.8 (8.94)	R-50.3 (8.86)	0.020 (0.113)
7	R-56 (9.86)	R-58.8 (10.35)	R-58.3 (10.27)	0.017 (0.097)

Base Assembly – Roof

Roof Insulation 1D R-Value (RSI)	R_{1D} ft²·hr·°F / Btu (m² K / W)	R_w ft²·hr·°F / Btu (m² K / W)	U_w Btu/ft² ·hr ·°F (W/m² K)
R-48 (8.45)	R-50.0 (8.81)	R-50.0 (8.81)	0.020 (0.114)

Parapet Linear Transmittance

Wall Insulation R-Value/in	Wall Insulation 1D R-Value (RSI)	R ft²·hr·°F / Btu (m² K / W)	U Btu/ft² ·hr ·°F (W/m² K)	Ψ Btu/ft·hr·°F (W/mK)
5	R-42.8 (7.53)	R-47.2 (8.32)	0.021 (0.120)	-0.0066 (-0.0115)
6	R-50.8 (8.94)	R-50.4 (8.87)	0.020 (0.113)	-0.0008 (-0.0014)
7	R-58.8 (10.35)	R-52.9 (9.33)	0.019 (0.107)	0.0034 (0.0059)

*Clear Wall and Roof areas measured to the outside of the insulation

Temperature Indices

	R42.8	R50.8	R58.8	
T_{i1}	0.93	0.93	0.93	Min T on interior concrete precast sandwich panel surface, at concrete roof slab intersection
T_{i2}	0.95	0.96	0.96	Max T on interior concrete precast sandwich panel surface, between studs
T_{i3}	0.95	0.95	0.95	Min T on concrete ceiling, at drywall intersection, exposed to interior air

Detail 7.5.11

Owens Corning Exterior Insulated Concrete Block Wall Assembly with Heckmann Pos-I-Tie Veneer Anchoring System Supporting Brick Veneer – Roof to Wall Intersection with Uninsulated Parapet

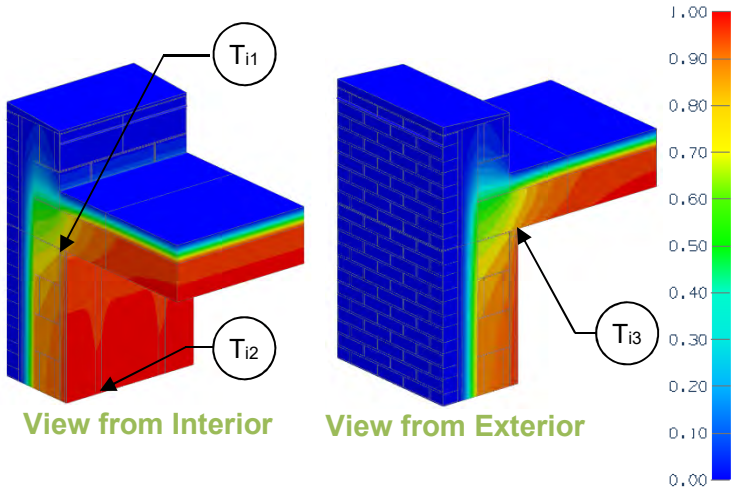

Thermal Performance Indicators

Assembly 1D (Nominal) R-Value	R_{1D}	R-5.6 (0.99 RSI) + exterior insulation
Transmittance / Resistance without Anomaly	U_r, R_r, U_w, R_w	"clear field" U- and R-values for: r = roof w = wall
Transmittance / Resistance	U, R	U- and R-values for overall assembly
Surface Temperature Index[1]	T_i	0 = exterior temperature 1 = interior temperature
Linear Transmittance	ψ	Incremental increase in per length of parapet

[1]Assumptions and limitations for surface temperatures identified in ASHRAE 1365-RP

Nominal (1D) vs. Assembly Performance Indicators

Base Assembly – Wall

Exterior Insulation 1D R-Value (RSI)	R_{1Dw} ft²·hr·°F / Btu (m² K / W)	R_w ft²·hr·°F / Btu (m² K / W)	U_w Btu/ft² ·hr ·°F (W/m² K)
R-10.0 (1.76)	R-15.6 (2.75)	R-13.4 (2.36)	0.075 (0.42)
R-20.0 (3.52)	R-25.6 (4.51)	R-20.0 (3.52)	0.050 (0.28)

Base Assembly - Roof

Roof Insulation 1DR-Value (RSI)	R_r ft² hr °F / Btu (m² K / W)	U_r Btu/ft² ·hr ·°F (W/m² K)
R-20 (3.52)	R-21.9 (3.86)	0.046 (0.26)

Parapet Linear Transmittance

Exterior Insulation 1D R-Value (RSI)	R ft²·hr·°F / Btu (m² K / W)	U Btu/ft² ·hr ·°F (W/m² K)	ψ Btu/ft hr °F (W/m K)
R-10.0 (1.76)	R-8.9 (1.56)	0.113 (0.64)	0.292 (0.505)
R-20.0 (3.52)	R-10.0 (1.75)	0.100 (0.57)	0.290 (0.502)

Temperature Indices

	R10	R20	
T_{i1}	0.72	0.74	Min T on interior CMU surface, at concrete roof slab intersection
T_{i2}	0.85	0.89	Max T on interior CMU surface, at studs and away from concrete roof slab intersection
T_{i3}	0.78	0.79	Min T on concrete ceiling, at drywall intersection, exposed to interior air

Detail 7.5.12

Owens Corning Exterior Insulated Concrete Block Wall Assembly with Heckmann Pos-I-Tie Veneer Anchoring System Supporting Brick Veneer – Roof to Wall Intersection with Insulation Wrapped Around Parapet

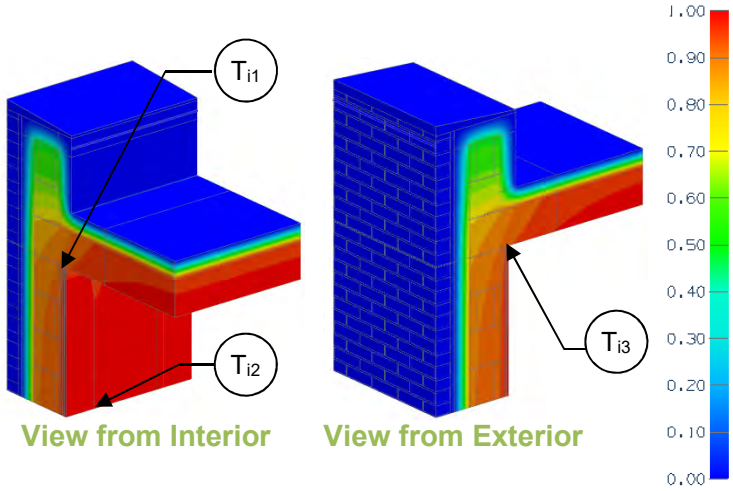

View from Interior View from Exterior

Thermal Performance Indicators

Assembly 1D (Nominal) R-Value	R_{1D}	R-5.6 (0.99 RSI) + exterior insulation
Transmittance / Resistance without Anomaly	U_r, R_r, U_w, R_w	"clear field" U- and R-values for: r = roof w = wall
Transmittance / Resistance	U, R	U- and R-values for overall assembly
Surface Temperature Index[1]	T_i	0 = exterior temperature 1 = interior temperature
Linear Transmittance	ψ	Incremental increase in transmittance per length of parapet

[1]Assumptions and limitations for surface temperatures identified in ASHRAE 1365-RP

Nominal (1D) vs. Assembly Performance Indicators

Base Assembly – Wall

Exterior Insulation 1D R-Value (RSI)	R_{1Dw} ft²·hr·°F / Btu (m² K / W)	R_w ft²·hr·°F / Btu (m² K / W)	U_w Btu/ft² ·hr ·°F (W/m² K)
R-10.0 (1.76)	R-15.6 (2.75)	R-13.4 (2.36)	0.075 (0.42)
R-20.0 (3.52)	R-25.6 (4.51)	R-20.0 (3.52)	0.050 (0.28)

Base Assembly - Roof

Roof Insulation 1DR-Value (RSI)	R_r ft² hr °F / Btu (m² K / W)	U_r Btu/ft² ·hr ·°F (W/m² K)
R-20 (3.52)	R-21.9 (3.86)	0.046 (0.26)

Parapet Linear Transmittance

Exterior Insulation 1D R-Value (RSI)	R ft²·hr·°F / Btu (m² K / W)	U Btu/ft² ·hr ·°F (W/m² K)	ψ Btu/ft hr °F (W/m K)
R-10.0 (1.76)	R-11.5 (2.03)	0.087 (0.49)	0.150 (0.260)
R-20.0 (3.52)	R-14.4 (2.53)	0.070 (0.40)	0.121 (0.209)

Temperature Indices

	R10	R20	
T_{i1}	0.81	0.85	Min T on interior CMU surface, at concrete roof slab intersection
T_{i2}	0.86	0.90	Max T on interior CMU surface, at studs and away from concrete roof slab intersection
T_{i3}	0.85	0.88	Min T on concrete ceiling, at drywall intersection, exposed to interior air

Detail 7.6.1

Exterior Insulated Concrete Drained EIFS Wall Assembly – Corner Intersection

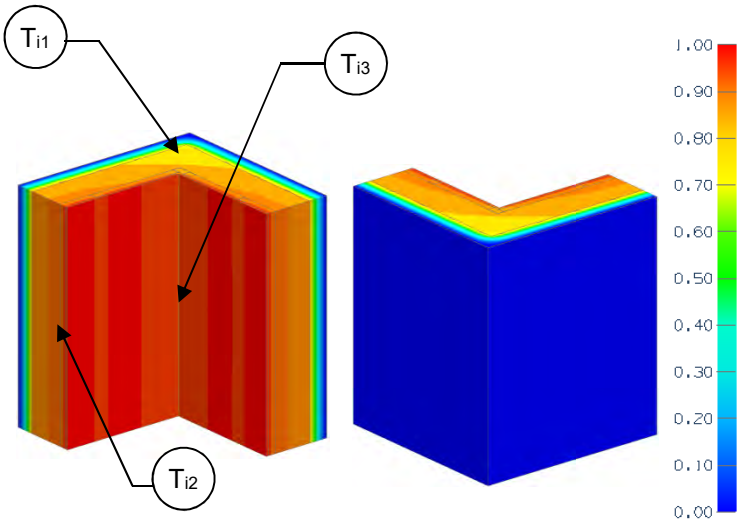

View from Interior View from Exterior

Thermal Performance Indicators

Assembly 1D (Nominal) R-Value	R_{1D}	R-3.0 (0.53 RSI) + exterior insulation
Transmittance / Resistance without Anomaly	U_o, R_o	"clear wall" U- and R-value, without corner
Transmittance / Resistance	U, R	U and R-values for the assembly
Surface Temperature Index[1]	T_i	0 = exterior temperature 1 = interior temperature
Linear Transmittance	ψ	Incremental increase in transmittance per linear length of corner

[1]Assumptions and limitations for surface temperatures identified in ASHRAE 1365-RP

Nominal (1D) vs. Assembly Performance Indicators

Exterior Insulation 1D R-Value (RSI)	R_{1D} ft²·hr·°F / Btu (m² K / W)	R_o ft²·hr·°F / Btu (m² K / W)	U_o Btu/ft² ·hr ·°F (W/m² K)	R ft²·hr·°F / Btu (m² K / W)	U Btu/ft² ·hr ·°F (W/m² K)	ψ Btu/ft hr °F (W/m K)
R-15 (2.64)	R-18.0 (3.17)	R-17.6 (3.10)	0.057 (0.32)	R-13.1 (2.30)	0.08 (0.43)	0.085 (0.147)

Temperature Indices

T_{i1}	0.81	Min T on concrete interior surface, at corner
T_{i2}	0.87	Max T on concrete interior surface, between studs away from corner
T_{i3}	0.89	Min T on drywall, at corner

Detail 7.6.2

Highly Insulated Precast Concrete Sandwich Panel Wall Assembly – Outside Corner

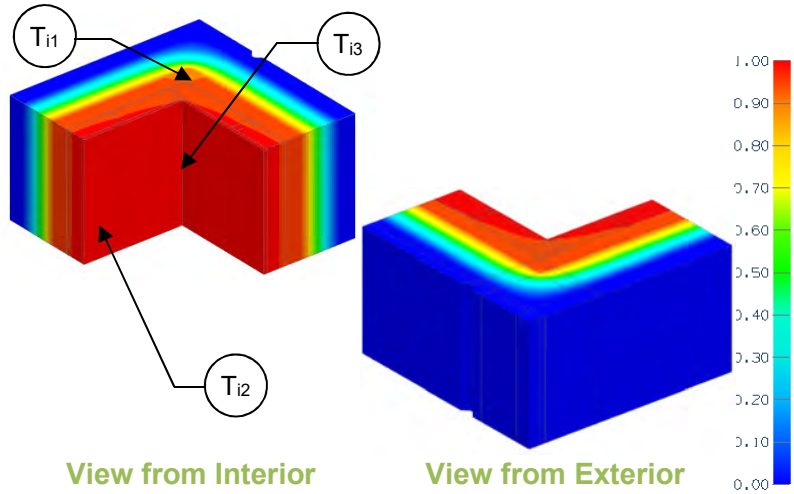

View from Interior View from Exterior

Thermal Performance Indicators

Assembly 1D (Nominal) R-Value	R_{1D}	R-2.76 (0.49 RSI) + insulation
Transmittance / Resistance without Anomaly	U_o, R_o	"clear field" U- and R-value
Transmittance / Resistance	U, R	U- and R-values for the overall assembly
Linear Transmittance	Ψ	Incremental increase in transmittance for corners

Nominal (1D) vs. Assembly Performance Indicators

Base Assembly – Wall

Wall Insulation R-Value/in	Wall Insulation 1D R-Value (RSI)	R_{1D} ft²·hr·°F / Btu (m² K / W)	R_o ft²·hr·°F / Btu (m² K / W)	U_o Btu/ft² ·hr ·°F (W/m² K)
5	R-40 (7.04)	R-42.8 (7.53)	R-42.3 (7.45)	0.024 (0.134)
6	R-48 (8.45)	R-50.8 (8.94)	R-50.3 (8.86)	0.020 (0.113)
7	R-56 (9.86)	R-58.8 (10.35)	R-58.3 (10.27)	0.017 (0.097)

Corner Linear Transmittance

Wall Insulation R-Value/in	Wall Insulation 1D R-Value (RSI)	R ft²·hr·°F / Btu (m² K / W)	U Btu/ft² ·hr ·°F (W/m² K)	Ψ Btu/ft·hr·°F (W/mK)
5	R-42.8 (7.53)	R-52.6 (9.27)	0.019 (0.108)	-0.0272 (-0.0471)
6	R-50.8 (8.94)	R-62.0 (10.92)	0.016 (0.092)	-0.0221 (-0.0382)
7	R-58.8 (10.35)	R-71.4 (12.57)	0.014 (0.080)	-0.0184 (-0.0319)

*Clear Wall area measured to the outside of the insulation

Temperature Indices

	R42.8	R50.8	R58.8	
T_{i1}	0.90	0.92	0.93	Min T on interior concrete precast sandwich panel surface, at corner
T_{i2}	0.94	0.95	0.96	Max T on interior concrete precast sandwich panel surface, between studs away from corner
T_{i3}	0.96	0.96	0.97	Min T on drywall, at corner

Detail 7.7.1

Interior Insulated Concrete Mass Wall with 3 5/8" x 1 5/8" Steel Studs (16" o.c.) Supporting Interior Finish – Intermediate Floor Intersection above Parking Garage

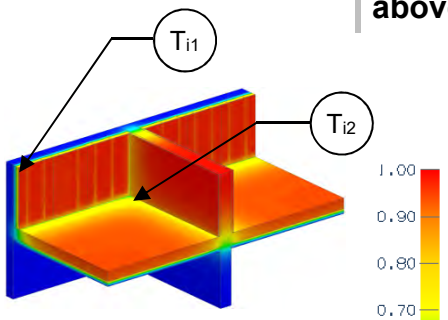

View from Interior

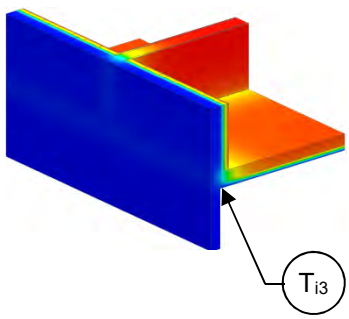

View from Exterior

Thermal Performance Indicators

Assembly 1D (Nominal) R-Value	R_{1D}	R-14 (2.47 RSI) + interior wall insulation
Transmittance / Resistance without Anomaly	U_w, R_w, U_f, R_f	"clear wall" U- and R-value of: w = concrete wall and steel stud assembly f = floor
Transmittance / Resistance	U_s, R_s U_i, R_i U_p, R_p	U and R values for: s = concrete wall + slab i = concrete wall + interior wall p = interior wall + slab
Transmittance / Resistance	U, R	U and R-values for overall assembly
Surface Temperature Index[1]	T_i	0 = exterior temperature 1 = interior temperature
Linear Transmittance	ψ_i, ψ_s, ψ_p	Incremental increase in transmittance per linear length of i = interior wall at exterior wall s = slab at exterior wall p = interior wall at slab
Point Transmittance	χ	Incremental increase in transmittance for inner wall and slab intersection

[1]Assumptions and limitations for surface temperatures identified in ASHRAE 1365-RP

Nominal (1D) vs. Assembly Performance Indicators

Base Assembly – Wall

Interior Insulation 1D R-Value (RSI)	R_{1D} ft²·hr·°F / Btu (m² K / W)	R_w ft²·hr·°F / Btu (m² K / W)	U_w Btu/ft² ·hr ·°F (W/m² K)
R-10 (1.76)	R-24.0 (4.23)	R-19.8 (3.49)	0.050 (0.29)
R-15 (2.64)	R-29.0 (5.11)	R-24.9 (4.38)	0.040 (0.23)

Interior Wall Linear Transmittance at Exterior Wall

R_i ft²·hr·°F / Btu (m² K / W)	U_i Btu/ft² ·hr ·°F (W/m² K)	ψ_i Btu/ft ·hr·°F (W/m K)
R-10.4 (1.83)	0.097 (0.55)	0.36 (0.622)
R-10.8 (1.90)	0.093 (0.53)	0.41 (0.710)

Base Assembly – Floor

Floor Insulation 1D R-Value (RSI)	R_f ft²·hr·°F / Btu (m² K / W)	U_f Btu/ft² ·hr ·°F (W/m² K)
R-20 (3.52)	R-22.2 (3.91)	0.045 (0.26)

Interior Wall Linear Transmittance at Slab

R_p ft²·hr·°F / Btu (m² K / W)	U_p Btu/ft² ·hr ·°F (W/m² K)	ψ_p Btu/ft ·hr·°F (W/m K)
R-13.0 (2.28)	0.077 (0.44)	0.461 (0.799)

Slab Linear Transmittance at Exterior Wall

Exterior Insulation 1D R-Value (RSI)	R_s ft²·hr·°F / Btu (m² K / W)	U_s Btu/ft² ·hr ·°F (W/m² K)	ψ_s Btu/ft ·hr·°F (W/m K)
R-10 (1.76)	R-11.1 (1.96)	0.090 (0.51)	0.406 (0.702)
R-15 (2.64)	R-12.0 (2.11)	0.084 (0.48)	0.390 (0.674)

Intersection Point Transmittance

R ft²·hr·°F / Btu (m² K / W)	U Btu/ft² ·hr ·°F (W/m² K)	χ[2] Btu/hr·°F (W/K)
R-10.0 (1.77)	0.100 (0.57)	-0.590 (-0.314)
R-10.5 (1.85)	0.095 (0.54)	-0.746 (-0.397)

[2]Values are negative for a correction factor. See section 6 in ASHRAE 1365-RP for clarification.

Temperature Indices

	R10	R15	
T_{i1}	0.04	0.03	Min T on concrete wall, between studs, away from wall and slab
T_{i2}	0.29	0.27	Max T on concrete wall, at corner intersection
T_{i3}	0.27	0.27	Min T on slab, at exterior wall away from intersection

Detail 7.7.2

Insulated Concrete Floor Slab – Concrete Column Intersection

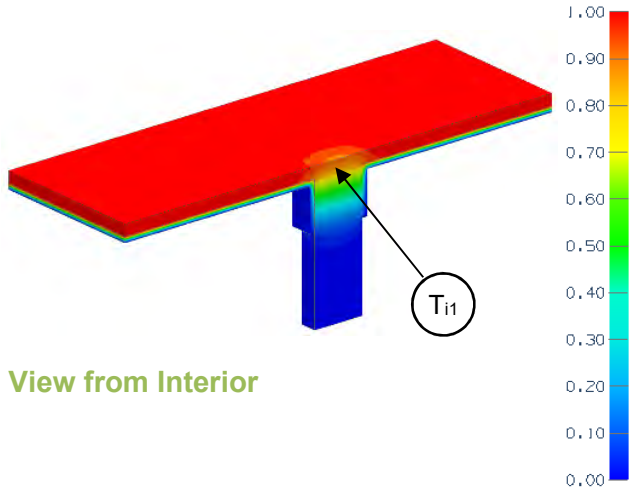

View from Interior

Thermal Performance Indicators

Assembly 1D (Nominal) R-Value	R_{1D}	R-2.2 (0.39 RSI) + Insulation
Transmittance / Resistance without Anomaly	U_o, R_o	"clear wall" U- and R-value, without pillar
Surface Temperature Index[1]	T_i	0 = exterior temperature 1 = interior temperature
Point Transmittance	χ	Incremental increase in transmittance for concrete column

[1]Assumptions and limitations for surface temperatures identified in ASHRAE 1365-RP

Scenarios

Scenario	Insulation
A	Without insulation returning down column
B	With insulation returning down column 2.5 ft

Nominal (1D) vs. Assembly Performance Indicators

	Exterior Insulation 1D R-Value (RSI)	R_{1D} ft²·hr·°F / Btu (m² K / W)	R_o ft²·hr·°F / Btu (m² K / W)	U_o Btu/ft² ·hr ·°F (W/m² K)	R ft²·hr·°F / Btu (m² K / W)	U Btu/ft² ·hr ·°F (W/m² K)	χ Btu/hr °F (W/K)
A	R-20.0 (3.52)	R-22.2 (3.92)	R-22.2 (3.92)	0.040 (0.23)	R-19.7 (3.47)	0.051 (0.29)	1.40 (0.74)
B	R-20.0 (3.52)	R-22.2 (3.92)	R-22.2 (3.92)	0.040 (0.23)	R-21.0 (3.71)	0.048 (0.27)	0.62 (0.33)

Temperature Indices

	A	B	
T_{i1}	0.62	0.79	Min T on concrete floor at column

Detail 7.7.3

Precast Sandwich Panel with 3 5/8" Steel Stud (16" o.c.) – Concrete Slab and Foundation Intersection

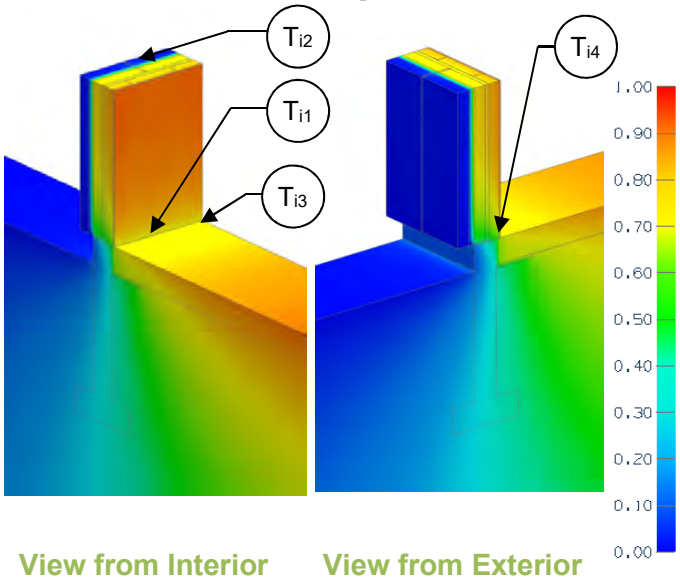

Thermal Performance Indicators

Assembly 1D (Nominal) R-Value	R_{1D}	R-3.9 (0.69 RSI) + sandwich panel insulation
Transmittance / Resistance without Anomaly	U_o, R_o	"clear wall" U- and R-value, without foundation
Transmittance / Resistance	U_j, R_j	U and R values with panel joint
Surface Temperature Index[1]	T_i	0 = exterior temperature 1 = interior temperature
Linear Transmittance	ψ_j, ψ_t	Incremental increase in transmittance per linear length of: j = panel joint t = assembly with foundation
Foundation Transmittance[2]	L_{2Df}, L_{2Dt}	Heat loss of slab on grade per unit width of slab: f = floor t = assembly with foundation

[1]Assumptions and limitations for surface temperatures identified in ASHRAE 1365-RP
[2]For on grade transition calculation, see Appendix B introduction

Nominal (1D) vs. Assembly Performance Indicators

Base Assembly – Wall

Sandwich Panel Insulation 1D R-Value (RSI)	R_{1D} ft²·hr·°F / Btu (m² K / W)	R_o ft²·hr·°F / Btu (m² K / W)	U_o Btu/ft² ·hr ·°F (W/m² K)	R_j ft²·hr·°F / Btu (m² K / W)	U_j Btu/ft² ·hr ·°F (W/m² K)	ψ_j Btu/ft ·hr·°F (W/m K)
R-10 (1.76)	R-13.9 (2.45)	R-12.6 (2.22)	0.079 (0.45)	R-11.7 (2.05)	0.086 (0.49)	0.026 (0.046)

Foundation Linear Transmittance

Foundation Insulation 1D R-Value (RSI)	Insulation Length in (mm)	L_{2Df} Btu/ft ·hr·°F (W/m K)	L_{2Dt} Btu/ft ·hr·°F (W/m K)	ψ_t Btu/ft ·hr·°F (W/m K)
R-5 (0.88)	12 (305)	1.18 (2.04)	1.97 (3.41)	0.451 (0.781)
R-5 (0.88)	24 (610)	1.12 (1.94)	1.93 (3.34)	0.466 (0.807)
R-5 (0.88)	36 (914)	1.07 (1.86)	1.89 (3.27)	0.470 (0.814)
R-5 (0.88)	48 (1219)	1.04 (1.80)	1.86 (3.22)	0.474 (0.820)

Temperature Indices

T_{i1}	0.41	Min T on sandwich panel, at slab intersection
T_{i2}	0.81	Max T on sandwich panel, at centre of panel away from vertical joint and slab
T_{i3}	0.16	Min T on slab, at sandwich panel intersection
T_{i4}	0.66	Min T on floor, at wall intersection

Detail 7.7.4

Precast Sandwich Panel with 3 5/8" Steel Stud (16" o.c.) - Concrete Slab and Foundation Wall Intersection

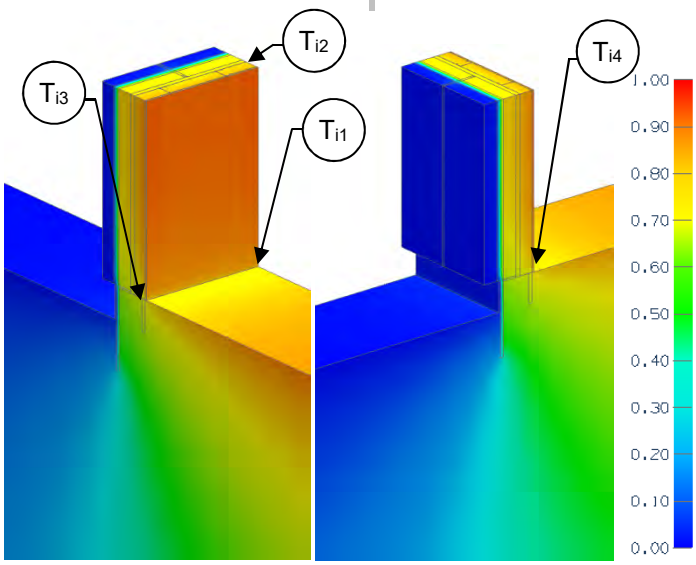

View from Interior View from Exterior

Thermal Performance Indicators

Assembly 1D (Nominal) R-Value	R_{1D}	R-3.9 (0.69 RSI) + sandwich panel insulation
Transmittance / Resistance without Anomaly	U_o, R_o	"clear wall" U- and R-value, without foundation and panel joint
Transmittance / Resistance	U_j, R_j	U and R values with panel joint
Surface Temperature Index[1]	T_i	0 = exterior temperature 1 = interior temperature
Linear Transmittance	ψ_j, ψ_t	Incremental increase in transmittance per linear length of: j = panel joint t = assembly with foundation
Foundation Transmittance[2]	L_{2Df}, L_{2Dt}	Heat loss of slab on grade per unit width of slab: f = floor t = assembly with foundation

[1]Assumptions and limitations for surface temperatures identified in ASHRAE 1365-RP
[2]For on grade transition calculation, see Appendix B introduction

Nominal (1D) vs. Assembly Performance Indicators

Base Assembly – Wall

Sandwich Panel Insulation 1D R-Value (RSI)	R_{1D} ft²·hr·°F / Btu (m² K / W)	R_o ft²·hr·°F / Btu (m² K / W)	U_o Btu/ft² ·hr ·°F (W/m² K)	R_j ft²·hr·°F / Btu (m² K / W)	U_j Btu/ft² ·hr ·°F (W/m² K)	ψ_j Btu/ft ·hr·°F (W/m K)
R-10 (1.76)	R-13.9 (2.45)	R-12.6 (2.22)	0.079 (0.45)	R-11.7 (2.05)	0.086 (0.49)	0.026 (0.046)

Foundation Linear Transmittance

Foundation Insulation 1D R-Value (RSI)	Insulation Depth in (mm)	L_{2Df} Btu/ft ·hr·°F (W/m K)	L_{2Dt} Btu/ft ·hr·°F (W/m K)	ψ_t Btu/ft ·hr·°F (W/m K)
R-5 (0.88)	12 (305)	1.19 (2.06)	1.71 (2.96)	0.175 (0.303)
R-5 (0.88)	24 (610)	1.10 (1.90)	1.63 (2.82)	0.188 (0.325)
R-5 (0.88)	36 (914)	1.04 (1.81)	1.58 (2.73)	0.190 (0.330)

Temperature Indices

T_{i1}	0.71	Min T on sandwich panel, at slab intersection
T_{i2}	0.82	Max T on sandwich panel, at centre of panel away from vertical joint and slab
T_{i3}	0.68	Min T on slab, at sandwich panel intersection
T_{i4}	0.80	Min T on floor, at wall intersection

Detail 7.7.5

Precast Sandwich Panel with 3 5/8" Steel Stud (16" o.c.) – Thermally Broken Concrete Slab and Foundation Intersection

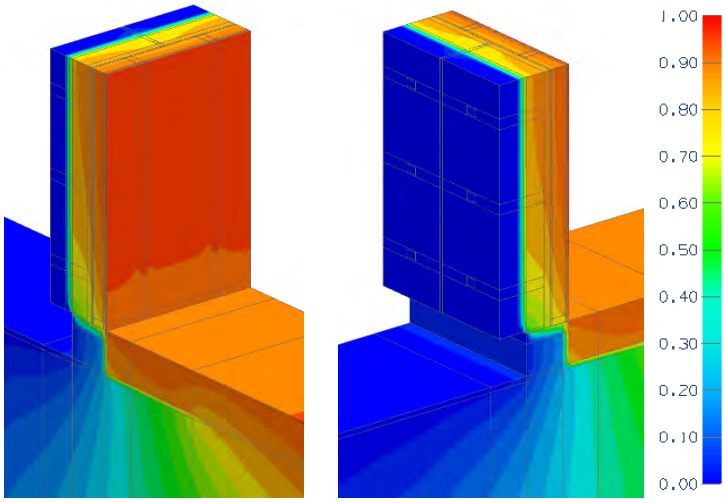

View from Interior View from Exterior

Thermal Performance Indicators

Assembly 1D (Nominal) R-Value	R_{1D}	R-3.9 (0.69 RSI) + sandwich panel insulation
Transmittance / Resistance without Anomaly	U_o, R_o	"clear wall" U- and R-value, without foundation and panel joint
Transmittance / Resistance	U_j, R_j	U and R values for with panel joint
Surface Temperature Index[1]	T_i	0 = exterior temperature 1 = interior temperature
Foundation Transmittance[2]	L_{2Df}, L_{2Dt}	Heat loss of slab on grade per unit width of slab: f = floor t = floor + wall + foundation
Linear Transmittance	ψ_j, ψ_t	Incremental increase in transmittance per linear length of: j = panel joint t = assembly with foundation

[1]Assumptions and limitations for surface temperatures identified in ASHRAE 1365-RP
[2]Calculation method follows ISO 10211:2007, 10.4.3

Scenarios

Scenario	
1	Continuous Concrete Footing, Caulked Floor to Footing Joint
2	Continuous Concrete Footing, 1" Fibreboard Joint
3	2" Armatherm Block under Precast wall and Anchors Only, 1" Fibreboard Joint
4	2" Armatherm Block under Precast Wall, Anchors and Stud Wall, 1" Fibreboard Joint
5	2" Armatherm Block under Precast Wall, Anchors and Stud Wall, 2" Armatherm Joint

Nominal (1D) vs. Assembly Performance Indicators

Base Assembly – Wall

Sandwich Panel Insulation 1D R-Value (RSI)	R_{1D} ft²·hr·°F / Btu (m² K / W)	R_o ft²·hr·°F / Btu (m² K / W)	U_o Btu/ft² ·hr ·°F (W/m² K)	R_j ft²·hr·°F / Btu (m² K / W)	U_j Btu/ft² ·hr ·°F (W/m² K)	ψ_j Btu/ft ·hr·°F (W/m K)
R-10 (1.76)	R-13.9 (2.45)	R-12.6 (2.22)	0.079 (0.45)	R-11.7 (2.05)	0.086 (0.49)	0.026 (0.046)

Foundation Linear Transmittance

Scenario	Foundation Insulation 1D R-Value (RSI)	Insulation Length From Footing in (mm)	L_{2Df} Btu/ft ·hr·°F (W/m K)	L_{2Dt} Btu/ft ·hr·°F (W/m K)	ψ_t Btu/ft ·hr·°F (W/m K)
1	R-5 (0.88)	12 (305)	1.18 (2.04)	1.97 (3.41)	0.451 (0.781)
2	R-5 (0.88)	12 (305)	1.18 (2.04)	1.88 (3.25)	0.360 (0.622)
3	R-5 (0.88)	12 (305)	1.18 (2.04)	1.83 (3.17)	0.313 (0.541)
4	R-5 (0.88)	12 (305)	1.18 (2.04)	1.74 (3.01)	0.221 (0.382)
5	R-5 (0.88)	12 (305)	1.18 (2.04)	1.71 (2.96)	0.190 (0.330)
	R-5 (0.88)	24 (610)	1.12 (1.94)	1.65 (2.85)	0.184 (0.319)
	R-5 (0.88)	36 (914)	1.07 (1.86)	1.60 (2.77)	0.183 (0.316)
	R-5 (0.88)	48 (1219)	1.04 (1.80)	1.57 (2.71)	0.182 (0.315)

Detail 7.7.6

Insulated Slab on Grade – Steel Column

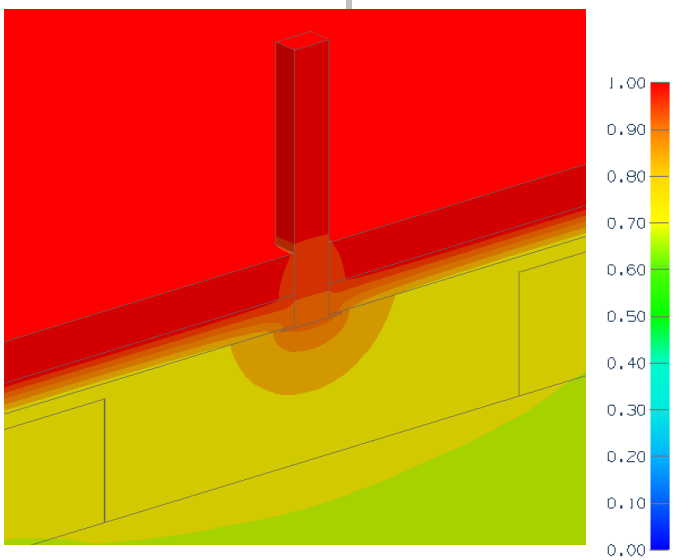

View from Exterior

Thermal Performance Indicators

Assembly 1D (Nominal) R-Value	R_{1D}	R-1.7 (0.30 RSI) + insulation
Transmittance / Resistance without Anomaly	U_o, R_o	"clear field" U- and R-value, without column
Surface Temperature Index[1]	T_i	0 = exterior temperature 1 = interior temperature
Point Transmittance	χ	Incremental increase in transmittance for column and footing

[1]Assumptions and limitations for surface temperatures identified in ASHRAE 1365-RP

Nominal (1D) vs. Assembly Performance Indicators

Base Assembly – Floor

Slab Insulation 1D R-Value (RSI)	R_{1D} ft²·hr·°F / Btu (m² K / W)	R_o ft²·hr·°F / Btu (m² K / W)	U_o Btu/ft² ·hr ·°F (W/m² K)
R-30 (5.26)	R-31.7 (5.57)	R-31.7 (5.57)	0.03 (0.179)

Column Point Transmittance

R ft²·hr·°F / Btu (m² K / W)	U Btu/ft² ·hr ·°F (W/m² K)	χ Btu/hr·°F (W/K)
R-29.9 (5.26)	0.03 (0.190)	1.64 (0.864)

Detail 7.7.7

Insulated Slab on Grade – Armatherm 500 Thermal Break under Column

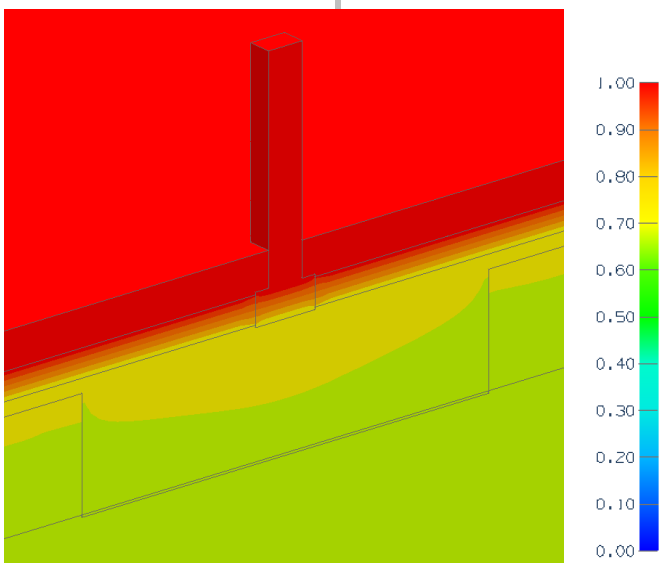

Thermal Performance Indicators

Assembly 1D (Nominal) R-Value	R_{1D}	R-1.7 (0.30 RSI) + insulation
Transmittance / Resistance without Anomaly	U_o, R_o	"clear field" U- and R-value, without column
Surface Temperature Index[1]	T_i	0 = exterior temperature 1 = interior temperature
Point Transmittance	χ	Incremental increase in transmittance for column and footing

[1]Assumptions and limitations for surface temperatures identified in ASHRAE 1365-RP

View from Exterior

Nominal (1D) vs. Assembly Performance Indicators

Base Assembly – Floor

Slab Insulation 1D R-Value (RSI)	R_{1D} ft²·hr·°F / Btu (m² K / W)	R_o ft²·hr·°F / Btu (m² K / W)	U_o Btu/ft² ·hr ·°F (W/m² K)
R-30 (5.26)	R-31.7 (5.57)	R-31.7 (5.57)	0.03 (0.179)

Column Point Transmittance

R ft²·hr·°F / Btu (m² K / W)	U Btu/ft² ·hr ·°F (W/m² K)	χ Btu/hr·°F (W/K)
R-31.5 (5.55)	0.03 (0.180)	0.151 (0.079)

Detail 7.7.8

Highly Insulated Precast Concrete Sandwich Panel Wall Assembly – Base of Wall at Foundation with Insulation Skirt

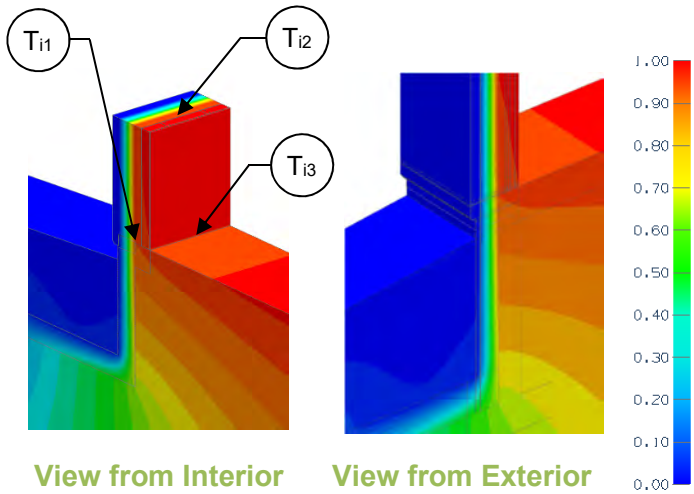

Thermal Performance Indicators

Assembly 1D (Nominal) R-Value	R_{1D}	R-2.76 (0.49 RSI) + insulation
Transmittance / Resistance without Anomaly	U_o, R_o	"clear field" U- and R-value
Transmittance / Resistance	U, R	U- and R-values for the overall assembly
Surface Temperature Index[1]	T_i	0 = exterior temperature 1 = interior temperature
Foundation Transmittance	L	Heat Loss of slab on grade per unit width of slab
Linear Transmittance	Ψ	Incremental increase in transmittance for base of wall detail at foundation

[1]Assumptions and limitations for surface temperatures identified in ASHRAE 1365-RP

Nominal (1D) vs. Assembly Performance Indicators

Base Assembly – Wall

Wall Insulation R-Value/in	Wall Insulation 1D R-Value (RSI)	R_{1D} ft²·hr·°F / Btu (m² K / W)	R_o ft²·hr·°F / Btu (m² K / W)	U_o Btu/ft² ·hr ·°F (W/m² K)
5	R-40 (7.04)	R-42.8 (7.53)	R-42.3 (7.45)	0.024 (0.134)
6	R-48 (8.45)	R-50.8 (8.94)	R-50.3 (8.86)	0.020 (0.113)
7	R-56 (9.86)	R-58.8 (10.35)	R-58.3 (10.27)	0.017 (0.097)

Base Assembly – Foundation

Foundation Insulation R-Value/in	Foundation Insulation 1D R-Value (RSI)	L Btu/ft·hr·°F (W/mK)
6	R-48 (8.45)	0.64 (1.11)

Base of Wall at Foundation Linear Transmittance

Wall Insulation R-Value/in	Wall Insulation 1D R-Value (RSI)	R ft²·hr·°F / Btu (m² K / W)	U Btu/ft² ·hr ·°F (W/m² K)	Ψ Btu/ft·hr·°F (W/mK)
5	R-42.8 (7.53)	R-4.5 (0.80)	0.220 (1.251)	0.0030 (0.0053)
6	R-50.8 (8.94)	R-4.6 (0.81)	0.217 (1.230)	0.0033 (0.0057)
7	R-58.8 (10.35)	R-4.7 (0.82)	0.214 (1.216)	0.0041 (0.0070)

Temperature Indices

	R42.8	R50.8	R58.8	
T_{i1}	0.91	0.91	0.91	Min T on interior concrete precast sandwich panel surface, at slab intersection
T_{i2}	0.95	0.96	0.96	Max T on interior concrete precast sandwich panel surface, between studs and away from slab
T_{i3}	0.92	0.92	0.92	Min T on floor, at drywall intersection

Detail 7.7.9

Owens Corning Exterior Insulated Concrete Block Wall Assembly with Steel Shelf Angle and Heckmann Pos-I-Tie Veneer Anchoring System Supporting Brick Veneer and Insulation Below Floor – Slab on Grade and Foundation Intersection

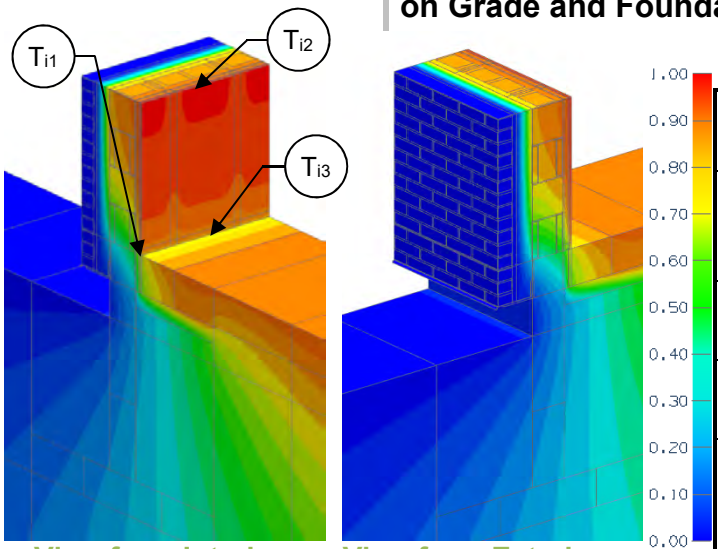

View from Interior View from Exterior

Thermal Performance Indicators

Assembly 1D (Nominal) R-Value	R_{1D}	R-5.6 (0.99 RSI) + exterior insulation
Transmittance / Resistance without Anomaly	U_o, R_o	"clear wall" U- and R-value without slab and shelf angle
Transmittance / Resistance	U, R	U- and R-values for overall assembly
Surface Temperature Index[1]	T_i	0 = exterior temperature 1 = interior temperature
Foundation Transmittance[2]	L_{2Df}, L_{2Dt}	Heat loss of slab on grade per unit width of slab: f = floor t = floor + wall + foundation
Linear Transmittance	ψ	Incremental increase in transmittance per linear length of foundation

[1]Assumptions and limitations for surface temperatures identified in ASHRAE 1365-RP
[2]Calculation method follows ISO 10211:2007, 10.4.3

Nominal (1D) vs. Assembly Performance Indicators

Base Assembly – Wall

Sandwich Panel Insulation 1D R-Value (RSI)	R_{1D} ft²·hr·°F / Btu (m² K / W)	R_o ft²·hr·°F / Btu (m² K / W)	U_o Btu/ft² ·hr ·°F (W/m² K)
R-10.0 (1.76)	R-15.6 (2.75)	R-13.4 (2.36)	0.075 (0.42)
R-20.0 (3.52)	R-25.6 (4.51)	R-20.0 (3.52)	0.050 (0.28)

Foundation Linear Transmittance

Foundation Insulation 1D R-Value (RSI)	Insulation Length in (mm)	L_{2Df} Btu/ft ·hr·°F (W/m K)	L_{2Dt} Btu/ft ·hr·°F (W/m K)	ψ Btu/ft ·hr·°F (W/m K)
R-17.5 (3.08)	24 (610)	1.25 (2.16)	1.75 (3.02)	0.301 (0.521)
R-17.5 (3.08)	24 (610)	1.25 (2.16)	1.70 (2.95)	0.322 (0.557)

Temperature Indices

	R10	R20	
T_{i1}	0.55	0.56	Min T on interior CMU surface, at slab intersection
T_{i2}	0.82	0.86	Max T on interior CMU surface, between studs and away from slab
T_{i3}	0.69	0.70	Min T on floor, at drywall intersection

Detail 7.7.10

Owens Corning Exterior Insulated Concrete Block Wall Assembly with Stainless Steel Shelf Angle and Heckmann Pos-I-Tie Veneer Anchoring System Supporting Brick Veneer and Insulation Below Floor – Slab on Grade and Foundation Intersection

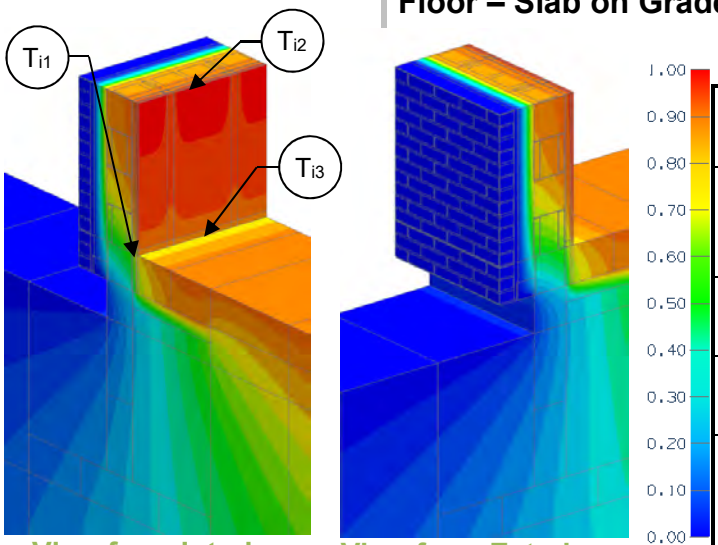

View from Interior View from Exterior

Thermal Performance Indicators

Assembly 1D (Nominal) R-Value	R_{1D}	R-5.6 (0.99 RSI) + exterior insulation
Transmittance / Resistance without Anomaly	U_o, R_o	"clear wall" U- and R-value without slab and shelf angle
Transmittance / Resistance	U, R	U- and R-values for overall assembly
Surface Temperature Index[1]	T_i	0 = exterior temperature 1 = interior temperature
Foundation Transmittance[2]	L_{2Df}, L_{2Dt}	Heat loss of slab on grade per unit width of slab: f = floor t = floor + wall + foundation
Linear Transmittance	ψ	Incremental increase in transmittance per linear length of foundation

[1]Assumptions and limitations for surface temperatures identified in ASHRAE 1365-RP
[2]Calculation method follows ISO 10211:2007, 10.4.3

Nominal (1D) vs. Assembly Performance Indicators

Base Assembly – Wall

Sandwich Panel Insulation 1D R-Value (RSI)	R_{1D} ft²·hr·°F / Btu (m² K / W)	R_o ft²·hr·°F / Btu (m² K / W)	U_o Btu/ft² ·hr ·°F (W/m² K)
R-10.0 (1.76)	R-15.6 (2.75)	R-13.4 (2.36)	0.075 (0.42)
R-20.0 (3.52)	R-25.6 (4.51)	R-20.0 (3.52)	0.050 (0.28)

Foundation Linear Transmittance

Foundation Insulation 1D R-Value (RSI)	Insulation Length in (mm)	L_{2Df} Btu/ft ·hr·°F (W/m K)	L_{2Dt} Btu/ft ·hr·°F (W/m K)	ψ Btu/ft ·hr·°F (W/m K)
R-17.5 (3.08)	24 (610)	1.25 (2.16)	1.68 (2.90)	0.230 (0.399)
R-17.5 (3.08)	24 (610)	1.25 (2.16)	1.62 (2.81)	0.241 (0.418)

Temperature Indices

	R10	R20	
T_{i1}	0.61	0.63	Min T on interior CMU surface, at slab intersection
T_{i2}	0.83	0.87	Max T on interior CMU surface, between studs and away from slab
T_{i3}	0.73	0.74	Min T on floor, at drywall intersection

Detail 7.8.1

Precast Sandwich Panel Wall Assembly – Emloc Thermally Broken Embedment Detail

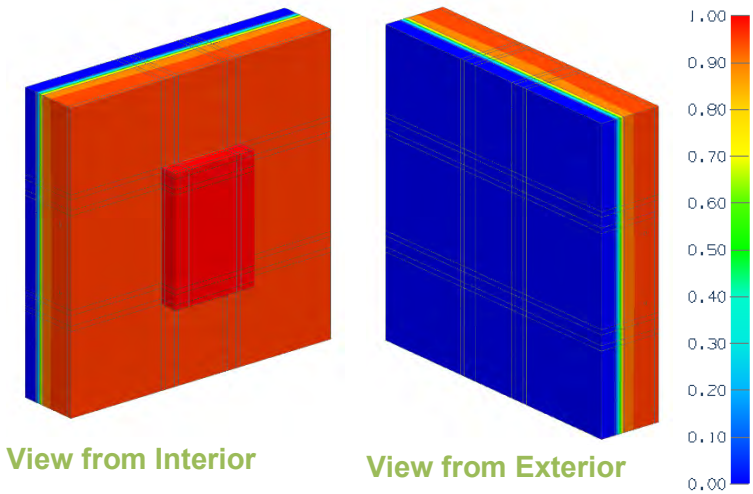

View from Interior

View from Exterior

Thermal Performance Indicators

Assembly 1D (Nominal) R-Value	R_{1D}	R-1.8 (0.32 RSI) + sandwich panel insulation
Transmittance / Resistance without Anomaly	U_o, R_o	"clear field" U- and R-values, without embedment
Transmittance / Resistance	U, R	U- and R-values for the assembly
Surface Temperature Index[1]	T_i	0 = exterior temperature 1 = interior temperature
Point Transmittance	χ	Incremental increase in transmittance for embedment

[1]Assumptions and limitations for surface temperatures identified in ASHRAE 1365-RP

Nominal (1D) vs. Assembly Performance Indicators

Base Assembly – Wall

Sandwich Panel Insulation 1D R-value (RSI)	R_{1Dw} ft²·hr·°F / Btu (m² K / W)	R_o ft²·hr·°F / Btu (m² K / W)	U_o Btu/ft² ·hr ·°F (W/m² K)
R-10 (1.76)	R-11.8 (2.08)	R-11.8 (2.06)	0.085 (0.48)
R-15 (2.64)	R-16.8 (2.96)	R-16.7 (2.94)	0.060 (0.34)
R-20 (3.52)	R-21.8 (3.84)	R-21.7 (3.82)	0.046 (0.26)

Embedment Point Transmittance

Sandwich Panel Insulation 1D R-value (RSI)	R ft²·hr·°F / Btu (m² K / W)	U Btu/ft² ·hr ·°F (W/m² K)	χ Btu/ ·hr ·°F (W/K)
R-10 (1.76)	R-11.4 (2.00)	0.088 (0.50)	0.053 (0.028)
R-15 (2.64)	R-15.5 (2.73)	0.065 (0.367)	0.094 (0.050)
R-20 (3.52)	R-19.8 (3.48)	0.051 (0.287)	0.090 (0.048)

8.0 Wood-Frame and Timber Construction

Detail 8.1.1 ..... **B.8.1**

Interior Insulated 2x6 Wood Stud (16” o.c.) Wall Assembly with Wood Strapping Supporting Fiber Cement Board - Clear Wall

Detail 8.1.2 ..... **B.8.2**

Exterior and Interior Insulated 2x6 Wood Stud (16” o.c.) Wall Assembly with Wood Strapping Supporting Fiber Cement Board – Clear Wall

Detail 8.1.3 ..... **B.8.3**

Exterior and Interior Insulated 2x6 Wood Stud (16” o.c.) Wall Assembly with Continuous Rigid Insulation Supporting Fiber Cement Board – Clear Wall

Detail 8.1.4 ..... **B.8.4**

Exterior and Interior Insulated 2x6 Wood Stud (16” o.c.) Wall Assembly with Horizontal Metal Z-Girts (24” o.c.) Supporting Fiber Cement Board – Clear Wall

Detail 8.1.5 ..... **B.8.5**

Exterior Insulated 2x6 Wood Stud (16” o.c.) Wall Assembly with Knight MFI-System (24” o.c.) Supporting Cladding – Clear Wall

Detail 8.1.6 ..... **B.8.6**

Exterior and Interior Insulated 2x6 Wood Stud (16” o.c.) Wall Assembly with Knight MFI-System (24” o.c.) Supporting Cladding – Clear Wall

Detail 8.1.7 ..... **B.8.7**

Exterior Insulated 2x6 Wood Stud (16”o.c.) Wall Assembly with Thermally Broken Aluminum Clip Rail System (24” o.c.) Supporting Cladding – Clear Wall

Detail 8.1.8 ..... **B.8.8**

Interior Insulated Double Framed Wall 2x6 and 2x4 Wood Stud (16” o.c.) Wall Assembly with 2” Gap – Clear Wall

Detail 8.1.9 ..... **B.8.9**

Interior Insulated Double Framed Wall 2x6 and 2x4 Wood Stud (16” o.c.) Wall Assembly with 3” Gap – Clear Wall

Detail 8.1.10 ..... **B.8.10**

Interior Insulated Double Framed Wall 2x6 and 2x4 Wood Stud (16” o.c.) Wall Assembly with 4” Gap – Clear Wall

Detail 8.1.11 ..... **B.8.11**

Interior Insulated Cross Laminated Timber (CLT) Spandrel with ISO-CONNECT Anchor – Anchor Point Transmittance

Detail 8.1.12 ..... **B.8.12**

Exterior and Interior Insulated 2”x6” Wood Stud (16” o.c. and 24” o.c.) Wall Assembly with Heckmann Pos-I-Tie Veneer Anchoring System Supporting Brick Veneer and Owens Corning R-19 Batt Insulation in Stud Cavity – Clear Wall

Detail 8.1.13 ..... **B.8.13**

Exterior and Interior Insulated 2”x6” Wood Stud (16” o.c. and 24” o.c.) Wall Assembly with Heckmann Pos-I-Tie Veneer Anchoring System Supporting Brick Veneer and Owens Corning R-22 Batt Insulation in Stud Cavity – Clear Wall

Detail 8.1.14 ..... B.8.14

Exterior and Interior Insulated 2”x6” Wood Stud (16” o.c. and 24” o.c.) Wall Assembly with Heckmann Pos-I-Tie Veneer Anchoring System Supporting Brick Veneer and Owens Corning R-24 Batt Insulation in Stud Cavity – Clear Wall

Detail 8.1.15 ..... B.8.15

Exterior Insulated Cross Laminated Timber (CLT) Wall Assembly with Continuous Rigid Insulation Supporting Fiber Cement Board – Clear Wall

Detail 8.1.16 ..... B.8.16

Exterior Insulated Cross Laminated Timber (CLT) Wall Assembly with Wood Strapping and Continuous Rigid Insulation Supporting Fiber Cement Board

Detail 8.2.1 ..... B.8.17

Exterior and Interior Insulated 2x6 Wood Stud (16” o.c.) Wall Assembly with Wood Strapping Supporting Fiber Cement Board - Rim Joist and Floor Intersection without Metal Flashing Bypassing Exterior Insulation

Detail 8.2.2 ..... B.8.18

Exterior and Interior Insulated 2x6 Wood Stud (16” o.c.) Wall Assembly with Wood Strapping Supporting Fiber Cement Board - Rim Joist and Floor Intersection with Metal Flashing Bypassing Exterior Insulation

Detail 8.2.3 ..... B.8.19

Exterior and Interior Insulated 2x6 Wood Stud (16” o.c.) Wall Assembly with Wood Strapping Supporting Fiber Cement Board – Cantilevered Wood Joist Balcony Intersection

Detail 8.2.4 ..... B.8.20

Exterior and Interior Insulated 2x6 Wood Stud (16” o.c.) Wall Assembly with Wood Strapping Supporting Fiber Cement Board – Independently Supported Balcony Intersection

Detail 8.2.5 ..... B.8.21

Exterior and Interior Insulated 2x6 Wood Stud (16” o.c.) Wall Assembly with Wood Strapping and Continuous Insulation Supporting Fiber Cement Board – Cantilevered Floor Intersection

Detail 8.2.6 ..... B.8.22

Interior Insulated Double Framed Wall 2x6 and 2x4 Wood Stud (16” o.c.) Wall Assembly with 2” Gap – Rim Joist and Floor Intersection

Detail 8.2.7 ..... B.8.23

Interior Insulated Double Framed Wall 2x6 and 2x4 Wood Stud (16” o.c.) Wall Assembly with 3” Gap – Rim Joist and Floor Intersection

Detail 8.2.8 ..... B.8.24

Interior Insulated Double Framed Wall 2x6 and 2x4 Wood Stud (16” o.c.) Wall Assembly with 4” Gap – Rim Joist and Floor Intersection

Detail 8.2.9 ..... B.8.25

Interior Insulated Double Framed Wall 2x6 and 2x4 Wood Stud (16” o.c.) Wall Assembly with 2” Gap – Insulated Rim Joist and Floor Intersection

Detail 8.2.10 ..... B.8.26

Interior Insulated Double Framed Wall 2x6 and 2x4 Wood Stud (16” o.c.) Wall Assembly with 3” Gap – Insulated Rim Joist and Floor Intersection

Detail 8.2.11 ..... B.8.27

Interior Insulated Double Framed Wall 2x6 and 2x4 Wood Stud (16” o.c.) Wall Assembly with 4” Gap – Insulated Rim Joist and Floor Intersection

Detail 8.3.1 ..... B.8.28

Exterior and Interior Insulated 2x6 Wood Stud (16” o.c.) Wall Assembly with Wood Strapping and Continuous Insulation Supporting Rainscreen Fiber Cement Board – Vinyl Window Intersection

Detail 8.3.2 ..... B.8.29

Exterior and Interior Insulated 2x6 Wood Stud (16” o.c.) Wall Assembly with Wood Strapping and Continuous Insulation Supporting Rainscreen Fiber Cement Board – Aluminum Window Intersection

Detail 8.3.3 ..... B.8.30

Exterior and Interior Insulated 2x6 Wood Stud (8” o.c.) Wall Assembly with Wood Strapping and Continuous Insulation Supporting Rainscreen Fiber Cement Board – Vinyl Window Intersection

Detail 8.3.4 ..... B.8.31

Exterior Insulated 2x6 Wood Stud (16” o.c.) Wall Assembly with Wood Strapping and Continuous Insulation Supporting Rainscreen Fiber Cement Board – Triple Glazed Flange Mounted Vinyl Window Intersection with Window Positioned in Wood Framing

Detail 8.3.5 ..... B.8.32

Exterior and Interior Insulated 2x6 Wood Stud (16” o.c.) Wall Assembly with Wood Strapping and Continuous Insulation Supporting Rainscreen Fiber Cement Board – Triple Glazed Flange Mounted Vinyl Window Intersection with Window Positioned in Wood Framing

Detail 8.3.6 ..... B.8.33

Exterior Insulated 2x6 Wood Stud (16” o.c.) Wall Assembly with Wood Strapping (16” o.c.) and Continuous Insulation Supporting Rainscreen Fiber Cement Board – Triple Glazed High Performance Vinyl Window Intersection (Insulated Frames)

Detail 8.3.7 ..... B.8.34

Exterior and Interior Insulated 2x6 Wood Stud (16” o.c.) Wall Assembly with Wood Strapping (16” o.c.) and Continuous Insulation Supporting Rainscreen

Fiber Cement Board – Triple Glazed High Performance Vinyl Window Intersection (Insulated Frames)

Detail 8.3.8 ..... B.8.35

Interior Insulated Cross Laminated Timber (CLT) Spandrel at Window and Dowel Laminated Timber (DLT) – Intermediate Floor Intersection with Edge of Floor and Glulam Beam Aligned

Detail 8.3.9 ..... B.8.36

Full Height Interior Insulated Cross Laminated Timber (CLT) Spandrel at Window and Dowel Laminated Timber (DLT) – Intermediate Floor Intersection with Edge of Floor and Glulam Beam Aligned

Detail 8.3.10 ..... B.8.37

Interior Insulated Cross Laminated Timber (CLT) Spandrel at Window and Dowel Laminated Timber (DLT) – Intermediate Floor Intersection with Edge of Floor and Glulam Beam Not Aligned

Detail 8.3.11 ..... B.8.38

Double Framed Wall with 2x6 and 2x4 Wood Studs (16” o.c.) and 2” Gap – Triple Glazed Flanged Fiberglass Window Intersection with Wood Blocking and Un-insulated Perimeter

Detail 8.3.12 ..... B.8.39

Double Framed Wall with 2x6 and 2x4 Wood Studs (16” o.c.) and 3” Gap – Triple Glazed Flanged Fiberglass Window Intersection with Wood Blocking and Un-insulated Perimeter

Detail 8.3.13 ..... B.8.40

Double Framed Wall with 2x6 and 2x4 Wood Studs (16” o.c.) and 4” Gap – Triple Glazed Flanged Fiberglass Window Intersection with Wood Blocking and Un-insulated Perimeter

Detail 8.3.14 ..... B.8.41

Double Framed Wall with 2x6 and 2x4 Wood Studs (16” o.c.) and 2” Gap – Triple Glazed Flanged Fiberglass Window Intersection with Wood Blocking and Insulated Perimeter

Detail 8.3.15 ..... B.8.42

Double Framed Wall with 2x6 and 2x4 Wood Studs (16” o.c.) and 3” Gap – Triple Glazed Flanged Fiberglass Window Intersection with Wood Blocking and Insulated Perimeter

Detail 8.3.16 ..... B.8.43

Double Framed Wall with 2x6 and 2x4 Wood Studs (16” o.c.) and 4” Gap – Triple Glazed Flanged Fiberglass Window Intersection with Wood Blocking and Insulated Perimeter

Detail 8.4.1 ..... B.8.44

Exterior and Interior Insulated 2x6 Wood Stud (16" o.c.) Wall Assembly with Wood Strapping and Continuous Insulation Supporting Rainscreen Fiber Cement Board – Vented Low-slope Roof & Parapet Intersection

Detail 8.4.2 ..... B.8.45

Exterior and Interior Insulated 2x6 Wood Stud (16" o.c.) Wall Assembly with Wood Strapping and Continuous Insulation Supporting Fiber Cement Board – Sloped Wood Framed Roof & Wall Intersection with Insulation at Ceiling

Detail 8.4.3 ..... B.8.46

Exterior and Interior Insulated 2x6 Wood Stud (16" o.c.) Wall Assembly with Wood Strapping and Continuous Insulation Supporting Rainscreen Fiber Cement Board – Sloped Wood Framed Roof & Wall Intersection with Insulation at Roof Sheathing

Detail 8.4.4 ..... B.8.47

Ventilated Wood Frame Low Slope Roof – Masonry Firewall Intersection

Detail 8.4.5 ..... B.8.48

Exterior Insulated Cross Laminated Timber (CLT) Wall Assembly with Continuous Rigid Insulation Supporting Fiber Cement Board –Low-Slope Roof & Parapet Intersection

Detail 8.5.1 ..... B.8.49

Exterior and Interior Insulated 2x6 Wood Stud (16" o.c.) Wall Assembly with Wood Strapping Supporting and Continuous Insulation Fiber Cement Board – Corner Intersection

Detail 8.6.1 ..... B.8.50

Wood-frame Sliding Door – Concrete Floor Intersection for Unheated Spaces (Parking Garages)

Detail 8.6.2 ..... B.8.51

Exterior and Interior Insulated 2x6 Wood Stud (16" o.c.) Wall Assembly with Continuous Insulation and Wood Strapping Supporting Fiber Cement Board – Rim Joist and Interior Insulated At-Grade Foundation Wall Intersection

Detail 8.6.3 ..... B.8.52

Exterior and Interior Insulated 2x6 Wood Stud (16" o.c.) Wall Assembly with Continuous Insulation and Wood Strapping Supporting Fiber Cement Board – Rim Joist and Exterior Insulated At-Grade Foundation Wall Intersection

Detail 8.6.4 ..... B.8.53

Exterior and Interior Insulated 2x6 Wood Stud (16" o.c.) Wall Assembly with Shelf Angle & Brick Ties Supporting Brick Veneer – Exterior Insulated At-Grade Foundation Wall Intersection

Detail 8.6.5 ..... B.8.54

Exterior and Interior Insulated 2x6 Wood Stud (16" o.c.) Wall Assembly with Shelf Angle & Brick Ties Supporting Brick Veneer – Intermediate Floor Intersection

Detail 8.6.6 ..... B.8.55

Exterior and Interior Insulated 2x6 Wood Stud (16” o.c.) Wall Assembly with Stand-off (Knife Plate) Shelf Angle & Brick Ties Supporting Brick Veneer – Intermediate Floor Intersection

Detail 8.7.1 ..... B.8.56

Exterior Insulated Wood Infill Wall Assembly with Wood Strapping and Continuous Insulation Supporting Fiber Cement Board – Concrete Wall and Intermediate Floor Intersection with Flashing Bypassing Exterior Insulation

Detail 8.7.2 ..... B.8.57

Exterior Insulated Cross Laminated Timber (CLT) Wall Assembly with Wood Strapping and Continuous Rigid Insulation Supporting Fiber Cement Board – Cross Laminated Timber Floor Intersection with Flashing Bypassing Exterior Insulation

Detail 8.1.1

Interior Insulated 2x6 Wood Stud (16" o.c.) Wall Assembly with Wood Strapping Supporting Fiber Cement Board - Clear Wall

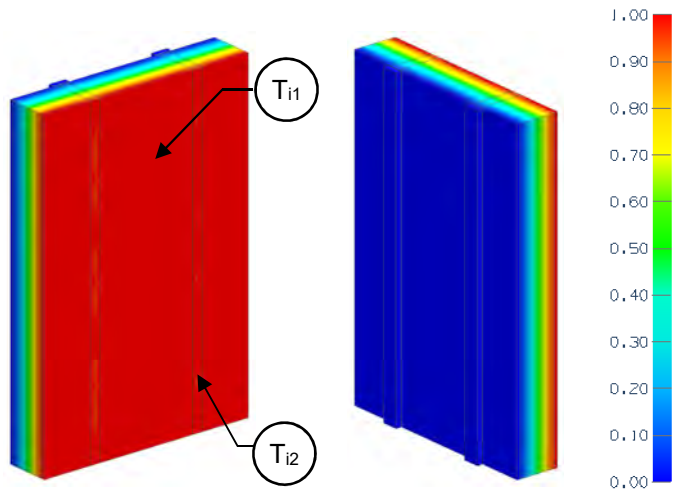

View from Interior View from Exterior

Thermal Performance Indicators

Assembly 1D (Nominal) R-Value	R_{1D}	R-21.5 (3.80 RSI) + exterior insulation
Transmittance / Resistance	U_o, R_o	"clear wall" U- and R-value
Surface Temperature Index[1]	T_i	0 = exterior temperature 1 = interior temperature

[1]Assumptions and limitations for surface temperatures identified in ASHRAE 1365-RP

Nominal (1D) vs. Assembly Performance Indicators

R_{1D} ft²·hr·°F / Btu (m² K / W)	R_o ft²·hr·°F / Btu (m² K / W)	U_o Btu/ft² ·hr ·°F (W/m² K)
R-21.5 (3.80)	R-19.7 (3.47)	0.051 (0.29)

Temperature Indices

T_{i1}	0.06	Min T on sheathing, between studs
T_{i2}	0.12	Max T on sheathing, along studs

Detail 8.1.2

Exterior and Interior Insulated 2x6 Wood Stud (16" o.c.) Wall Assembly with Wood Strapping Supporting Fiber Cement Board – Clear Wall

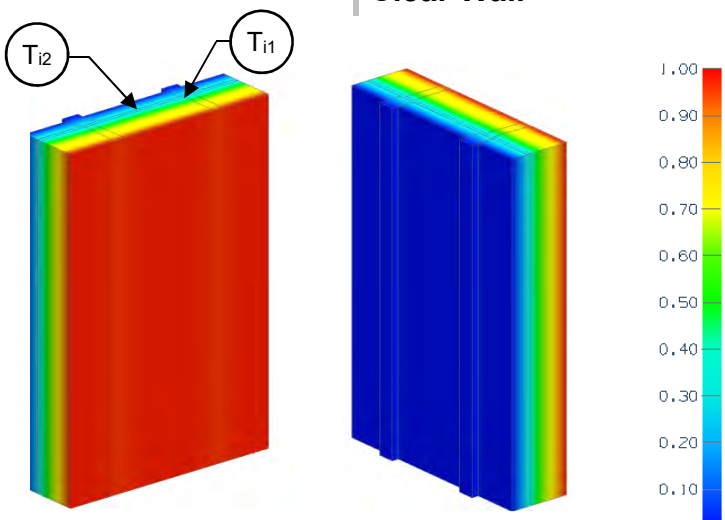

View from Interior View from Exterior

Thermal Performance Indicators

Assembly 1D (Nominal) R-Value	R_{1D}	R-21.7 (3.81 RSI) + exterior insulation
Transmittance / Resistance	U_o, R_o	"clear wall" U- and R-value
Surface Temperature Index[1]	T_i	0 = exterior temperature 1 = interior temperature

[1]Assumptions and limitations for surface temperatures identified in ASHRAE 1365-RP

Nominal (1D) vs. Assembly Performance Indicators

Exterior Insulation 1D R-Value (RSI)	R_{1D} ft²·hr·°F / Btu (m² K / W)	R_o ft²·hr·°F / Btu (m² K / W)	U_o Btu/ft² ·hr ·°F (W/m² K)
R-5 (0.88)	R-26.5 (4.67)	R-23.8 (4.19)	0.042 (0.24)
R-10 (1.76)	R-31.5 (5.55)	R-27.6 (4.86)	0.036 (0.21)
R-15 (2.64)	R-36.5 (6.44)	R-31.3 (5.51)	0.032 (0.18)
R-20 (3.52)	R-41.5 (7.32)	R-34.9 (6.15)	0.029 (0.16)
R-25 (4.40)	R-46.5 (8.20)	R-38.6 (6.79)	0.026 (0.15)

Temperature Indices

	R5	R10	R15	R20	R25	
T_{i1}	0.23	0.33	0.41	0.47	0.52	Min T on sheathing, adjacent to studs
T_{i2}	0.24	0.35	0.43	0.50	0.54	Max T on sheathing, between studs at centre of stud cavity

Detail 8.1.3

Exterior and Interior Insulated 2x6 Wood Stud (16" o.c.) Wall Assembly with Continuous Rigid Insulation Supporting Fiber Cement Board – Clear Wall

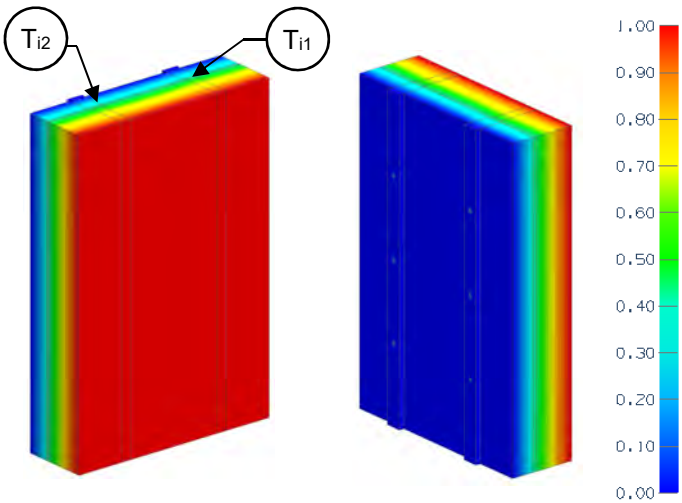

View from Interior View from Exterior

Thermal Performance Indicators

Assembly 1D (Nominal) R-Value	R_{1D}	R-21.5 (3.80 RSI) + exterior insulation
Transmittance / Resistance	U_o, R_o	"clear wall" U- and R-value
Surface Temperature Index[1]	T_i	0 = exterior temperature 1 = interior temperature

[1]Assumptions and limitations for surface temperatures identified in ASHRAE 1365-RP

Nominal (1D) vs. Assembly Performance Indicators

Exterior Insulation 1D R-Value (RSI)	R_{1D} ft²·hr·°F / Btu (m² K / W)	R_o ft²·hr·°F / Btu (m² K / W)	U_o Btu/ft² ·hr ·°F (W/m² K)
R-5.0 (0.88)	R-26.5 (4.68)	R-24.6 (4.32)	0.041 (0.23)
R-10.0 (1.76)	R-31.5 (5.56)	R-29.2 (5.14)	0.034 (0.20)
R-15.0 (2.64)	R-36.5 (6.44)	R-33.6 (5.92)	0.030 (0.17)
R-20.0 (3.52)	R-41.5 (7.32)	R-37.8 (6.66)	0.026 (0.15)
R-25.0 (4.40)	R-46.5 (8.20)	R-41.9 (7.37)	0.024 (0.14)

Temperature Indices

	R5	R10	R15	R20	R25	
T_{i1}	0.25	0.35	0.41	0.46	0.50	Min T on sheathing, at fasteners along studs
T_{i2}	0.32	0.42	0.50	0.57	0.59	Max T on sheathing, between fasteners along studs

Detail 8.1.4

Exterior and Interior Insulated 2x6 Wood Stud (16" o.c.) Wall Assembly with Horizontal Metal Z-Girts (24" o.c.) Supporting Fiber Cement Board – Clear Wall

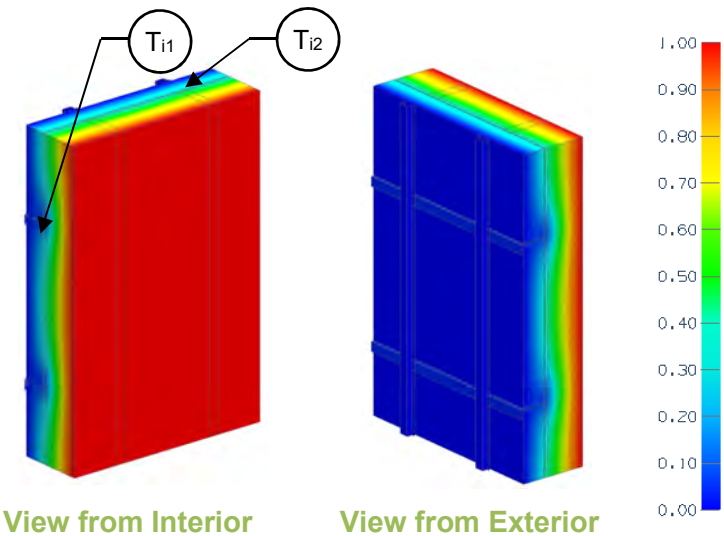

View from Interior View from Exterior

Thermal Performance Indicators

Assembly 1D (Nominal) R-Value	R_{1D}	R-21.6 (3.80 RSI) + exterior insulation
Transmittance / Resistance	U_o, R_o	"clear wall" U- and R-value
Surface Temperature Index[1]	T_i	0 = exterior temperature 1 = interior temperature

[1]Assumptions and limitations for surface temperatures identified in ASHRAE 1365-RP

Nominal (1D) vs. Assembly Performance Indicators

Exterior Insulation 1D R-Value (RSI)	R_{1D} ft²·hr·°F / Btu (m² K / W)	R_o ft²·hr·°F / Btu (m² K / W)	U_o Btu/ft² ·hr ·°F (W/m² K)
R-5 (0.88)	R-26.5 (4.67)	R-23.4 (4.12)	0.043 (0.24)
R-10 (1.76)	R-31.5 (5.55)	R-26.4 (4.64)	0.038 (0.22)
R-15 (2.64)	R-36.5 (6.44)	R-28.7 (5.06)	0.035 (0.20)
R-20 (3.52)	R-41.5 (7.32)	R-30.8 (5.42)	0.032 (0.18)
R-25 (4.40)	R-46.5 (8.20)	R-32.6 (5.73)	0.031 (0.17)

Temperature Indices

	R5	R10	R15	R20	R25	
T_{i1}	0.12	0.15	0.18	0.20	0.22	Min T on sheathing, along horizontal Z-girts
T_{i2}	0.30	0.41	0.48	0.53	0.56	Max T on sheathing, at studs between horizontal Z-girts

Detail 8.1.5

Exterior Insulated 2x6 Wood Stud (16” o.c.) Wall Assembly with Knight MFI-System (24” o.c.) Supporting Cladding – Clear Wall

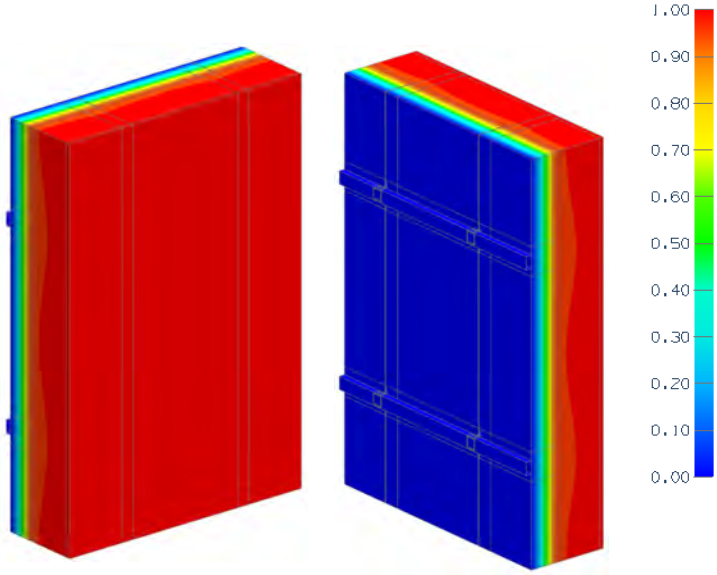

View from Interior View from Exterior

Thermal Performance Indicators

Assembly 1D (Nominal) R-Value	R_{1D}	R-3.2 (0.56 RSI) + exterior insulation
Transmittance / Resistance	U_o, R_o	“clear wall” U- and R-value

Nominal (1D) vs. Assembly Performance Indicators

Exterior Insulation 1D R-Value (RSI)	R_{1D} ft²·hr·°F / Btu (m² K / W)	R_o ft²·hr·°F / Btu (m² K / W)	U_o Btu/ft² ·hr ·°F (W/m² K)
R-8.4 (1.48)	R-11.6 (2.04)	R-11.1 (1.95)	0.090 (0.51)
R-12.6 (2.22)	R-15.8 (2.78)	R-14.6 (2.57)	0.069 (0.39)
R-14.7 (2.59)	R-17.9 (3.15)	R-16.2 (2.85)	0.062 (0.35)
R-16.8 (2.96)	R-20.0 (3.52)	R-17.8 (3.13)	0.056 (0.32)
R-21.0 (3.70)	R-24.2 (4.26)	R-20.8 (3.66)	0.048 (0.28)
R-25.2 (4.44)	R-28.4 (5.00)	R-23.6 (4.16)	0.042 (0.24)

Detail 8.1.6

Exterior and Interior Insulated 2x6 Wood Stud (16" o.c.) Wall Assembly with Knight MFI-System (24" o.c.) Supporting Cladding – Clear Wall

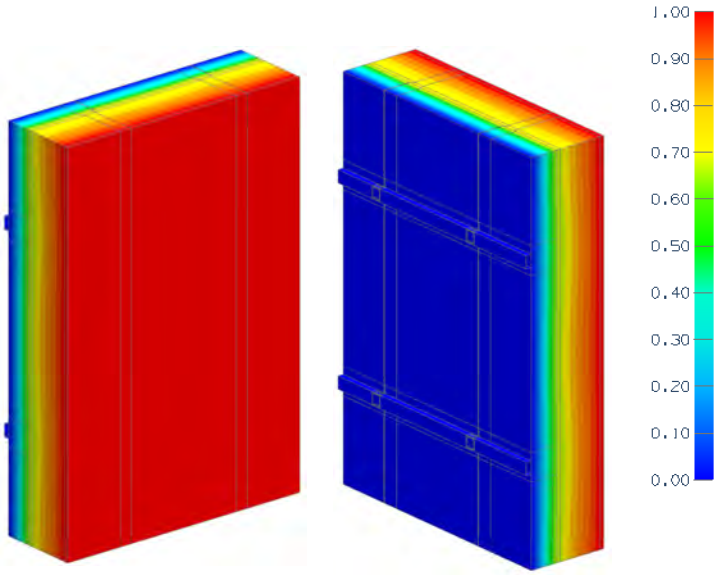

View from Interior View from Exterior

Thermal Performance Indicators

Assembly 1D (Nominal) R-Value	R_{1D}	R-21.3 (3.75 RSI) + exterior insulation
Transmittance / Resistance	U_o, R_o	"clear wall" U- and R-value

Nominal (1D) vs. Assembly Performance Indicators

Exterior Insulation 1D R-Value (RSI)	R_{1D} ft²·hr·°F / Btu (m² K / W)	R_o ft²·hr·°F / Btu (m² K / W)	U_o Btu/ft² ·hr ·°F (W/m² K)
R-8.4 (1.48)	R-29.7 (5.23)	R-26.4 (4.65)	0.038 (0.22)
R-12.6 (2.22)	R-33.9 (5.97)	R-29.9 (5.27)	0.033 (0.19)
R-14.7 (2.59)	R-36.0 (6.34)	R-31.6 (5.57)	0.032 (0.18)
R-16.8 (2.96)	R-38.1 (6.71)	R-33.2 (5.85)	0.030 (0.17)
R-21.0 (3.70)	R-42.3 (7.45)	R-36.3 (6.39)	0.028 (0.16)
R-25.2 (4.44)	R-46.5 (8.19)	R-39.2 (6.90)	0.025 (0.14)

Detail 8.1.7

Exterior Insulated 2x6 Wood Stud (16”o.c.) Wall Assembly with Thermally Broken Aluminum Clip Rail System (24” o.c.) Supporting Cladding – Clear Wall

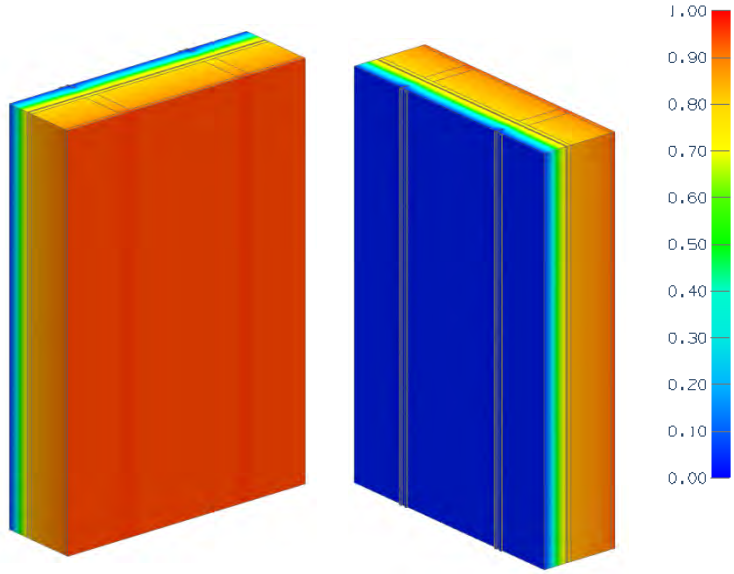

View from Interior View from Exterior

Thermal Performance Indicators

Assembly 1D (Nominal) R-Value	R_{1Da}	R-2.6 (0.46 RSI) + exterior insulation and fiberglass batt insulation
Assembly 1D (Nominal) R-Value	R_{1Db}	R-20.6 (3.63 RSI) + exterior insulation (with fiberglass batt insulation)
Transmittance / Resistance	U_a, R_a, U_b, R_b	“Clear wall” U- and R-value: a = without batt insulation b = with batt insulation

[1]If insulation in stud cavity is used, R-0.9 insulation for the cavity space is eliminated

Nominal (1D) vs. Assembly Performance Indicators

Clear Wall – Without Fiberglass Batt Insulation in Stud Cavity

Exterior Insulation 1D R-Value (RSI)	R_{1Da} ft²·hr·°F / Btu (m² K / W)	R_a ft²·hr·°F / Btu (m² K / W)	U_a Btu/ft² ·hr ·°F (W/m² K)
R-12.6 (2.22)	R-15.2 (2.68)	R-15.4 (2.73)	0.065 (0.37)

Clear Wall – With Fiberglass Batt Insulation in Stud Cavity

Exterior Insulation 1D R-Value (RSI)	R_{1Db} ft²·hr·°F / Btu (m² K / W)	R_b ft²·hr·°F / Btu (m² K / W)	U_b Btu/ft² ·hr ·°F (W/m² K)
R-12.6 (2.22)	R-33.2 (5.85)	31.3 (5.49)	0.032 (0.18)

Detail 8.1.8

Interior Insulated Double Framed Wall 2x6 and 2x4 Wood Stud (16" o.c.) Wall Assembly with 2" Gap – Clear Wall

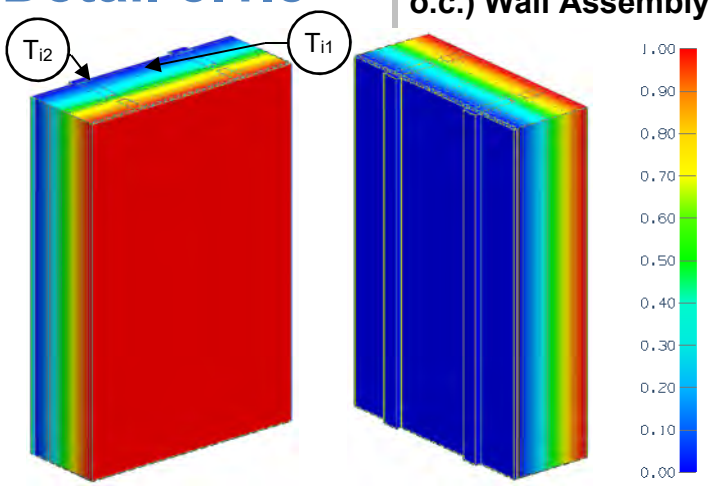

View from Interior View from Exterior

Thermal Performance Indicators

Assembly 1D (Nominal) R-Value	R_{1D}	R-2.5 (0.44 RSI) + exterior insulation
Transmittance / Resistance without Anomaly	U_o, R_o	"clear field" U- and R-value, without connectors or joint
Surface Temperature Index[1]	T_i	0 = exterior temperature 1 = interior temperature

Nominal (1D) vs. Assembly Performance Indicators

Insulation R/in	Fill Insulation 1D R-Value (RSI)	R_{1D} ft²·hr·°F / Btu (m² K / W)	R_o ft²·hr·°F / Btu (m² K / W)	U_o Btu/ft² ·hr ·°F (W/m² K)
3.5	R-38.5 (6.78)	R-41.0 (7.23)	R-38.0 (6.70)	0.026 (0.15)
4	R-44.0 (7.75)	R-46.5 (8.19)	R-42.4 (7.47)	0.024 (0.13)
5	R-55.0 (9.69)	R-57.5 (10.13)	R-50.8 (8.94)	0.020 (0.11)
6	R-66.0 (11.62)	R-68.5 (12.07)	R-58.9 (10.37)	0.017 (0.10)

Temperature Indices

	R38.5	R44	R55	R66	
T_{i1}	0.029	0.028	0.024	0.020	Min T on sheathing, between studs
T_{i2}	0.070	0.068	0.064	0.061	Max T on sheathing, at studs

Detail 8.1.9

Interior Insulated Double Framed Wall 2x6 and 2x4 Wood Stud (16" o.c.) Wall Assembly with 3" Gap – Clear Wall

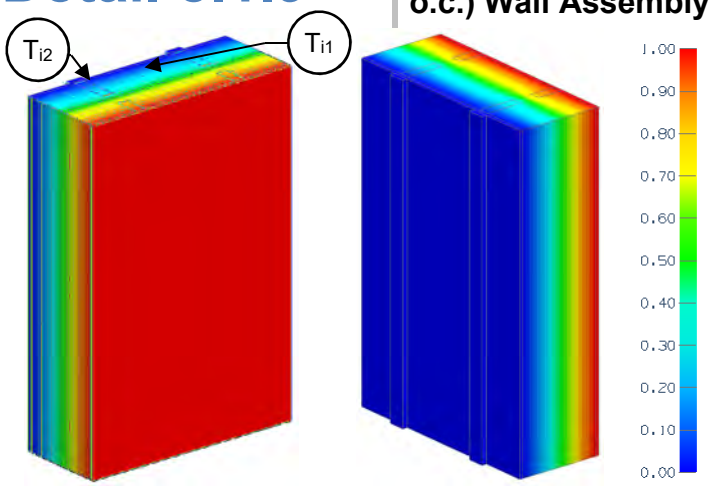

View from Interior View from Exterior

Thermal Performance Indicators

Assembly 1D (Nominal) R-Value	R_{1D}	R-2.5 (0.44 RSI) + insulation
Transmittance / Resistance without Anomaly	U_o, R_o	"clear field" U- and R-value, without connectors or joint
Surface Temperature Index[1]	T_i	0 = exterior temperature 1 = interior temperature

Nominal (1D) vs. Assembly Performance Indicators

Insulation R/in	Fill Insulation 1D R-Value (RSI)	R_{1D} ft²·hr·°F / Btu (m² K / W)	R_o ft²·hr·°F / Btu (m² K / W)	U_o Btu/ft² ·hr ·°F (W/m² K)
3.5	R-42.0 (7.40)	R-44.5 (7.84)	R-41.6 (7.32)	0.024 (0.14)
4	R-48.0 (8.45)	R-50.5 (8.90)	R-46.4 (8.18)	0.022 (0.12)
5	R-60.0 (10.57)	R-62.5 (11.01)	R-55.9 (9.84)	0.018 (0.10)
6	R-72.0 (12.68)	R-74.5 (13.13)	R-65.0 (11.45)	0.015 (0.09)

Temperature Indices

	R42	R48	R60	R72	
T_{i1}	0.027	0.025	0.022	0.018	Min T on sheathing, between studs
T_{i2}	0.064	0.061	0.058	0.055	Max T on sheathing, at studs

Detail 8.1.10

Interior Insulated Double Framed Wall 2x6 and 2x4 Wood Stud (16" o.c.) Wall Assembly with 4" Gap – Clear Wall

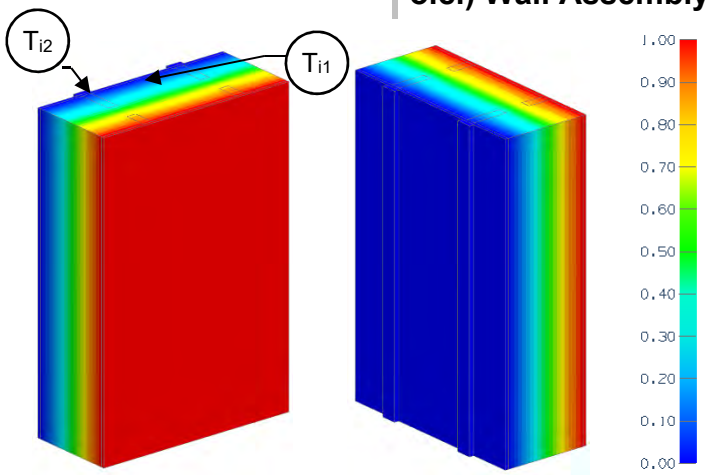

View from Interior View from Exterior

Thermal Performance Indicators

Assembly 1D (Nominal) R-Value	R_{1D}	R-2.5 (0.44 RSI) + insulation
Transmittance / Resistance without Anomaly	U_o, R_o	"clear field" U- and R-value, without connectors or joint
Surface Temperature Index[1]	T_i	0 = exterior temperature 1 = interior temperature

Nominal (1D) vs. Assembly Performance Indicators

Insulation R/in	Fill Insulation 1D R-Value (RSI)	R_{1D} ft²·hr·°F / Btu (m² K / W)	R_o ft²·hr·°F / Btu (m² K / W)	U_o Btu/ft² ·hr ·°F (W/m² K)
3.5	R-45.5 (8.01)	R-48.0 (8.46)	R-45.1 (7.94)	0.022 (0.13)
4	R-52.0 (9.16)	R-54.5 (9.60)	R-50.5 (8.89)	0.020 (0.11)
5	R-65.0 (11.45)	R-67.5 (11.89)	R-60.9 (10.73)	0.016 (0.09)
6	R-78.0 (13.74)	R-80.5 (14.18)	R-71.1 (12.52)	0.014 (0.08)

Temperature Indices

	R45.5	R52	R65	R78	
T_{i1}	0.025	0.023	0.020	0.017	Min T on sheathing, between studs
T_{i2}	0.059	0.056	0.053	0.050	Max T on sheathing, at studs

Detail 8.1.11

Interior Insulated Cross Laminated Timber (CLT) Spandrel with ISO-CONNECT Anchor – Anchor Point Transmittance

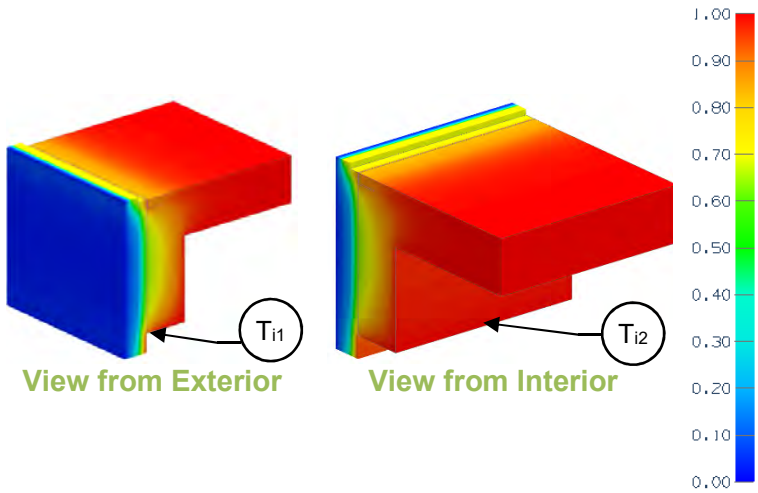

Thermal Performance Indicators

Assembly 1D (Nominal) R-Value at Beam	R_{1D}	R-15.4 (2.71 RSI) + insulation
Transmittance / Resistance without Anomaly	U_o, R_o	U- and R-values for the assembly without connector
Transmittance / Resistance	U, R	U and R-values for the overall assembly
Point Transmittance	χ	Incremental increase in transmittance per connector

Assembly Performance Indicators

Base Assembly – Without Connector

ISO-CONNECT Spacing	Spandrel Insulation 1D R-Value (RSI)	R_{1D} ft²·hr·°F / Btu (m² K / W)	R_o ft²·hr·°F / Btu (m² K / W)	U_o Btu/ft² ·hr ·°F (W/m² K)
36" o.c.	R-8.4 (1.48)	R-23.8 (4.18)	R-13.7 (2.41)	0.073 (0.42)
	R-16.8 (2.96)	R-32.2 (5.66)	R-16.8 (2.96)	0.059 (0.34)
	R-25.2 (4.44)	R-40.6 (7.14)	R-18.9 (3.34)	0.053 (0.30)
	R-33.6 (5.92)	R-49.0 (8.62)	R-20.3 (3.58)	0.049 (0.28)

Connector Point Transmittance

ISO-CONNECT Spacing	Spandrel Insulation 1D R-Value (RSI)	R_{1D} ft²·hr·°F / Btu (m² K / W)	R ft²·hr·°F / Btu (m² K / W)	U Btu/ft² ·hr ·°F (W/m² K)	χ Btu/hr·°F (W/K)
36" o.c.	R-8.4 (1.48)	R-23.8 (4.18)	R-13.0 (2.29)	0.077 (0.44)	0.031 (0.016)
	R-16.8 (2.96)	R-32.2 (5.66)	R-15.6 (2.76)	0.064 (0.36)	0.038 (0.020)
	R-25.2 (4.44)	R-40.6 (7.14)	R-17.3 (3.05)	0.058 (0.33)	0.042 (0.022)
	R-33.6 (5.92)	R-49.0 (8.62)	R-18.5 (3.25)	0.054 (0.31)	0.041 (0.022)

Temperature Indices

	R-8.4	R-16.8	R-25.2	R-33.6	
Ti_1	0.90	0.94	0.96	0.97	Min T on beam, at insulation, between connectors
Ti_2	0.90	0.93	0.94	0.95	Min T on beam, at insulation, along connector

Detail 8.1.12

Exterior and Interior Insulated 2”x6” Wood Stud (16” o.c. and 24” o.c.) Wall Assembly with Heckmann Pos-I-Tie Veneer Anchoring System Supporting Brick Veneer and Owens Corning R-19 Batt Insulation in Stud Cavity – Clear Wall

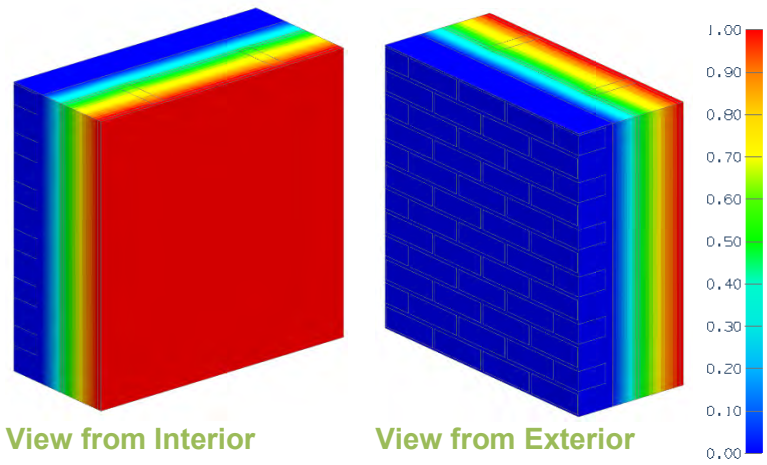

View from Interior View from Exterior

Thermal Performance Indicators

Assembly 1D (Nominal) R-Value	R_{1D}	R-22.6 (3.98 RSI) + exterior insulation
Transmittance / Resistance without Anomaly	U_o, R_o	“clear wall” U- and R-value

[1]Assumptions and limitations for surface temperatures identified in ASHRAE 1365-RP

Nominal (1D) vs. Assembly Performance Indicators

Exterior Insulation 1D R-Value (RSI)	R_{1D} ft²·hr·°F / Btu (m² K / W)	16” o.c. Stud Spacing		24” o.c. Stud Spacing	
		R_o ft²·hr·`°F / Btu (m² K / W)	U_o Btu/ft² ·hr ·°F (W/m² K)	R_o ft²·hr·°F / Btu (m² K / W)	U_o Btu/ft² ·hr ·°F (W/m² K)
R-10.0 (1.76)	R-32.6 (5.74)	R-29.6 (5.21)	0.034 (0.19)	R-30.6 (5.39)	0.033 (0.19)
R-15.0 (2.64)	R-37.6 (6.62)	R-33.6 (5.92)	0.030 (0.17)	R-35.0 (6.16)	0.029 (0.16)
R-20.0 (3.52)	R-42.6 (7.50)	R-37.4 (6.59)	0.027 (0.15)	R-39.1 (6.89)	0.026 (0.15)

Detail 8.1.13

Exterior and Interior Insulated 2”x6” Wood Stud (16” o.c. and 24” o.c.) Wall Assembly with Heckmann Pos-I-Tie Veneer Anchoring System Supporting Brick Veneer and Owens Corning R-22 Batt Insulation in Stud Cavity – Clear Wall

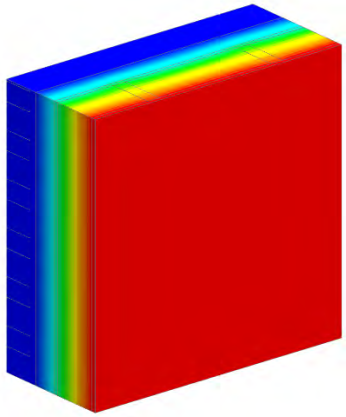

View from Interior

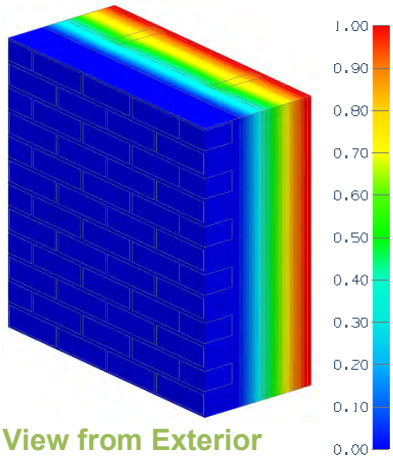

View from Exterior

Thermal Performance Indicators

Assembly 1D (Nominal) R-Value	R_{1D}	R-25.6 (4.51 RSI) + exterior insulation
Transmittance / Resistance without Anomaly	U_o, R_o	“clear wall” U- and R-value

[1]Assumptions and limitations for surface temperatures identified in ASHRAE 1365-RP

Nominal (1D) vs. Assembly Performance Indicators

Exterior Insulation 1D R-Value (RSI)	R_{1D} ft²·hr·°F / Btu (m² K / W)	16” o.c. Stud Spacing		24” o.c. Stud Spacing	
		R_o ft²·hr·`°F / Btu (m² K / W)	U_o Btu/ft² ·hr ·°F (W/m² K)	R_o ft²·hr·°F / Btu (m² K / W)	U_o Btu/ft² ·hr ·°F (W/m² K)
R-10.0 (1.76)	R-35.6 (6.27)	R-31.7 (5.58)	0.032 (0.18)	R-33.0 (5.82)	0.030 (0.17)
R-15.0 (2.64)	R-40.6 (7.15)	R-35.8 (6.30)	0.028 (0.16)	R-37.3 (6.58)	0.027 (0.15)
R-20.0 (3.52)	R-45.6 (8.03)	R-39.6 (6.97)	0.025 (0.14)	R-41.3 (7.28)	0.024 (0.14)

Detail 8.1.14

Exterior and Interior Insulated 2”x6” Wood Stud (16” o.c. and 24” o.c.) Wall Assembly with Heckmann Pos-I-Tie Veneer Anchoring System Supporting Brick Veneer and Owens Corning R-24 Batt Insulation in Stud Cavity – Clear Wall

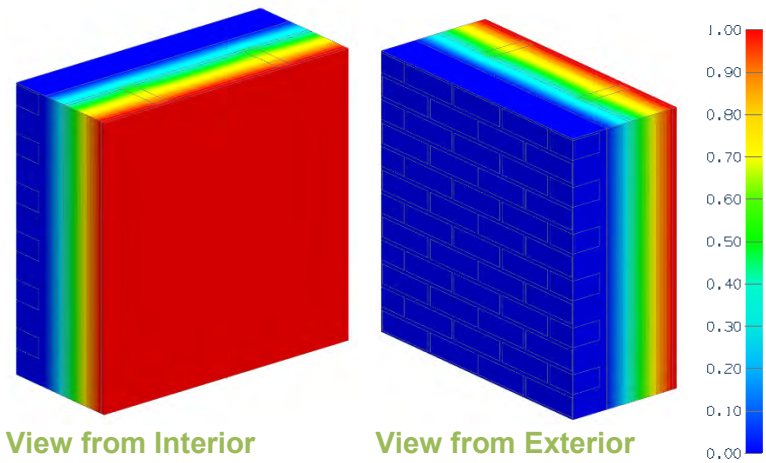

View from Interior View from Exterior

Thermal Performance Indicators

Assembly 1D (Nominal) R-Value	R_{1D}	R-27.6 (4.86 RSI) + exterior insulation
Transmittance / Resistance without Anomaly	U_o, R_o	“clear wall” U- and R-value

[1]Assumptions and limitations for surface temperatures identified in ASHRAE 1365-RP

Nominal (1D) vs. Assembly Performance Indicators

Exterior Insulation 1D R-Value (RSI)	R_{1D} ft²·hr·°F / Btu (m² K / W)	16” o.c. Stud Spacing		24” o.c. Stud Spacing	
		R_o ft²·hr·`°F / Btu (m² K / W)	U_o Btu/ft² ·hr ·°F (W/m² K)	R_o ft²·hr·°F / Btu (m² K / W)	U_o Btu/ft² ·hr ·°F (W/m² K)
R-10.0 (1.76)	R-37.6 (6.62)	R-33.2 (5.84)	0.030 (0.17)	R-34.7 (6.11)	0.029 (0.16)
R-15.0 (2.64)	R-42.6 (7.50)	R-37.1 (6.53)	0.027 (0.15)	R-39.0 (6.86)	0.026 (0.15)
R-20.0 (3.52)	R-47.6 (8.38)	R-41.0 (7.22)	0.024 (0.14)	R-42.9 (7.56)	0.023 (0.13)

Detail 8.1.15

Exterior Insulated Cross Laminated Timber (CLT) Wall Assembly with Continuous Rigid Insulation Supporting Fiber Cement Board – Clear Wall

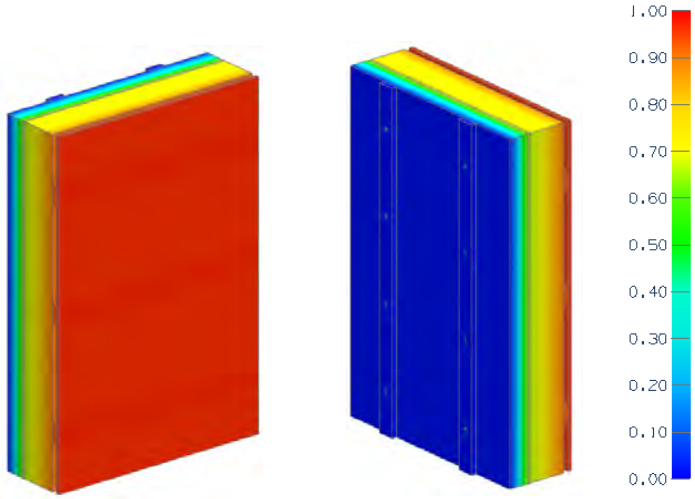

View from Interior View from Exterior

Thermal Performance Indicators

Assembly 1D (Nominal) R-Value	R_{1D}	R-9.9 (1.74 RSI) + exterior insulation
Transmittance / Resistance	U_o, R_o	"clear wall" U- and R-value

Nominal (1D) vs. Assembly Performance Indicators

Exterior Insulation 1D R-Value (RSI)	R_{1D} ft²·hr·°F / Btu (m² K / W)	R_o ft²·hr·°F / Btu (m² K / W)	U_o Btu/ft² ·hr ·°F (W/m² K)
R-15.0 (2.64)	R-24.9 (4.38)	R-24.7 (4.35)	0.040 (0.23)
R-20.0 (3.52)	R-29.9 (5.26)	R-29.4 (5.17)	0.034 (0.19)
R-25.0 (4.40)	R-34.9 (6.14)	R-33.9 (5.98)	0.029 (0.17)

Detail 8.1.16

Exterior Insulated Cross Laminated Timber (CLT) Wall Assembly with Wood Strapping and Continuous Rigid Insulation Supporting Fiber Cement Board

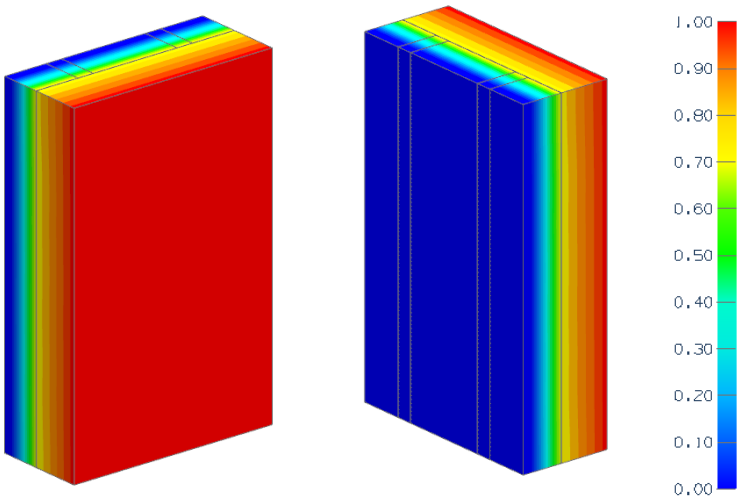

View from Interior View from Exterior

Thermal Performance Indicators

Assembly 1D (Nominal) R-Value	R_{1D}	R-10.5 (1.85 RSI) + exterior insulation
Transmittance / Resistance without Anomaly	U_o, R_o	"clear wall" U- and R-value, without CLT floor slab

Nominal (1D) vs. Assembly Performance Indicators

Exterior Insulation 1D R-Value (RSI)	R_{1D} ft²·hr·°F / Btu (m² K / W)	R_o ft²·hr·°F / Btu (m² K / W)	U_o Btu/ft² ·hr ·°F (W/m² K)
R-15 (2.64)	R-25.5 (4.49)	R-22.9 (4.04)	0.044 (0.25)
R-20 (3.52)	R-30.5 (5.37)	R-26.8 (4.72)	0.037 (0.21)
R-25 (4.40)	R-35.5 (6.25)	R-30.5 (5.36)	0.033 (0.19)

Detail 8.2.1

Exterior and Interior Insulated 2x6 Wood Stud (16" o.c.) Wall Assembly with Wood Strapping Supporting Fiber Cement Board - Rim Joist and Floor Intersection without Metal Flashing Bypassing Exterior Insulation

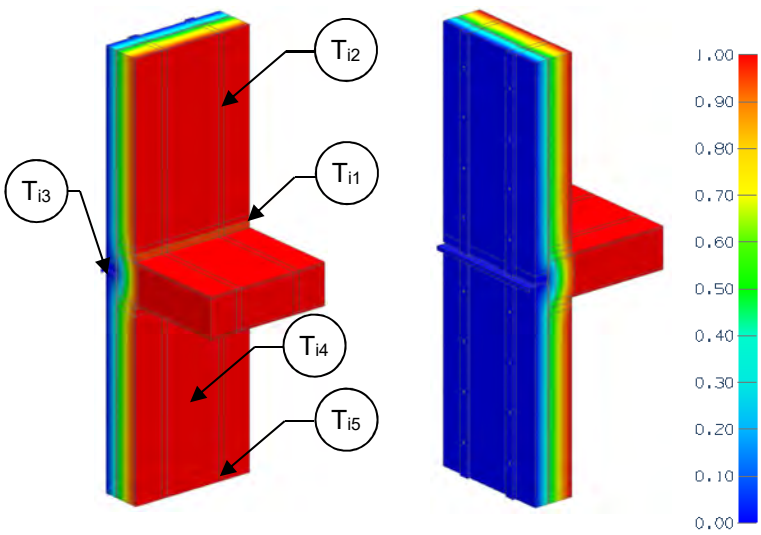

View from Interior View from Exterior

Thermal Performance Indicators

Assembly 1D (Nominal) R-Value	R_{1D}	R-21.6 (3.80 RSI) + exterior insulation
Transmittance / Resistance without Anomaly	U_o, R_o	"clear wall" U- and R-value, without floor
Transmittance / Resistance	U, R	U and R-values for the overall assembly
Surface Temperature Index[1]	T_i	0 = exterior temperature 1 = interior temperature
Linear Transmittance	ψ	Incremental increase in transmittance per linear length of wood framed floor

[1]Assumptions and limitations for surface temperatures identified in ASHRAE 1365-RP

Nominal (1D) vs. Assembly Performance Indicators

Exterior Insulation 1D R-Value (RSI)	R_{1D} ft²·hr·°F / Btu (m² K / W)	R_o ft²·hr·°F / Btu (m² K / W)	U_o Btu/ft² ·hr ·°F (W/m² K)	R ft²·hr·°F / Btu (m² K / W)	U Btu/ft² ·hr ·°F (W/m² K)	ψ Btu/ft ·hr·°F (W/m K)
R-0 (0.00)	R-21.6 (3.80)	R-20.0 (3.47)	0.051 (0.29)	R-17.0 (3.00)	0.059 (0.33)	0.070 (0.122)
R-5 (0.88)	R-26.6 (4.68)	R-24.6 (4.32)	0.041 (0.23)	R-21.6 (3.81)	0.046 (0.26)	0.049 (0.084)
R-10 (1.76)	R-31.6 (5.56)	R-29.2 (5.14)	0.034 (0.19)	R-25.3 (4.46)	0.039 (0.22)	0.046 (0.080)
R-15 (2.64)	R-36.6 (6.44)	R-33.7 (5.93)	0.030 (0.17)	R-28.8 (5.06)	0.035 (0.20)	0.045 (0.077)

Temperature Indices

	R0	R5	R10	R15	
T_{i1}	-	0.25	0.35	0.39	Min T on sheathing, at floor intersection
T_{i2}	-	0.36	0.47	0.54	Max T on sheathing, at studs between fasteners
T_{i3}	0.15	0.28	0.32	0.35	Min T on rim joist, between floor joists
T_{i4}	0.06	-	-	-	Min T on sheathing, between studs in stud cavity
T_{i5}	0.16	-	-	-	Max T on sheathing, at studs

Detail 8.2.2

Exterior and Interior Insulated 2x6 Wood Stud (16" o.c.) Wall Assembly with Wood Strapping Supporting Fiber Cement Board - Rim Joist and Floor Intersection with Metal Flashing Bypassing Exterior Insulation

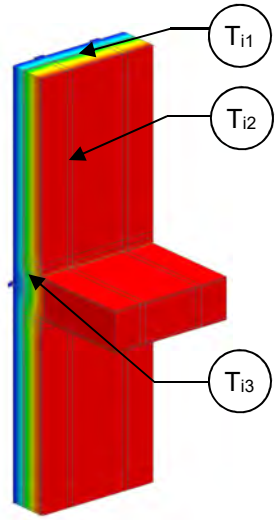

View from Interior

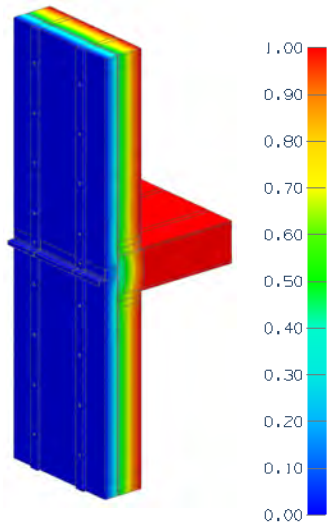

View from Exterior

Thermal Performance Indicators

Assembly 1D (Nominal) R-Value	R_{1D}	R-21.6 (3.80 RSI) + exterior insulation
Transmittance / Resistance without Anomaly	U_o, R_o	"clear wall" U- and R-value, without floor
Transmittance / Resistance	U, R	U and R-values for the overall assembly
Surface Temperature Index[1]	T_i	0 = exterior temperature 1 = interior temperature
Linear Transmittance	ψ	Incremental increase in transmittance per linear length of wood framed floor

[1]Assumptions and limitations for surface temperatures identified in ASHRAE 1365-RP

Nominal (1D) vs. Assembly Performance Indicators

Exterior Insulation 1D R-Value (RSI)	R_{1D} ft²·hr·°F / Btu (m² K / W)	R_o ft²·hr·°F / Btu (m² K / W)	U_o Btu/ft² ·hr ·°F (W/m² K)	R ft²·hr·°F / Btu (m² K / W)	U Btu/ft² ·hr ·°F (W/m² K)	ψ Btu/ft ·hr·°F (W/m K)
R-5 (0.88)	R-26.6 (4.68)	R-24.6 (4.32)	0.041 (0.23)	R-21.9 (3.85)	0.046 (0.26)	0.044 (0.076)
R-10 (1.76)	R-31.6 (5.56)	R-29.2 (5.14)	0.034 (0.19)	R-26.1 (4.6)	0.038 (0.22)	0.035 (0.061)
R-15 (2.64)	R-36.6 (6.44)	R-33.6 (5.93)	0.03 (0.17)	R-30.1 (5.3)	0.033 (0.19)	0.031 (0.054)

Temperature Indices

	R5	R10	R15	
T_{i1}	0.25	0.38	0.46	Min T on sheathing, between studs at centre of stud cavity
T_{i2}	0.35	0.47	0.54	Max T on sheathing, at studs between fasteners
T_{i3}	0.33	0.43	0.61	Min T on rim joist, between floor joists

Detail 8.2.3

Exterior and Interior Insulated 2x6 Wood Stud (16" o.c.) Wall Assembly with Wood Strapping Supporting Fiber Cement Board – Cantilevered Wood Joist Balcony Intersection

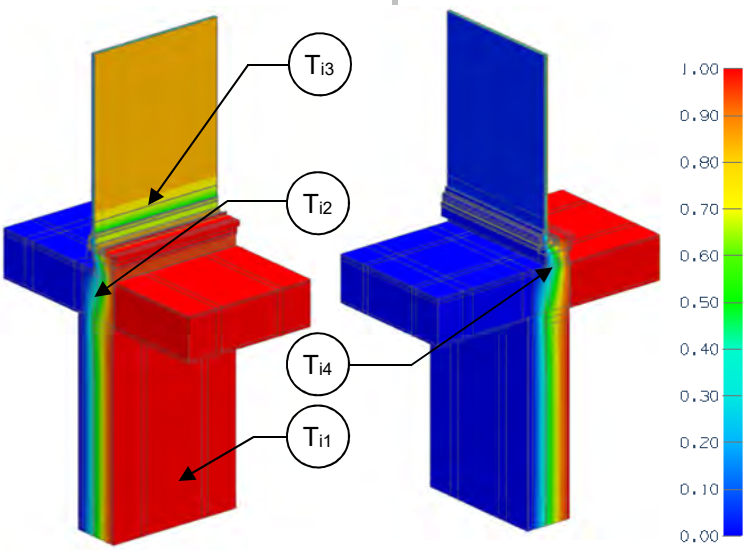

View from Interior View from Exterior

Thermal Performance Indicators

Assembly 1D (Nominal) R-Value	R_{1D}	R-21.6 (3.80 RSI) + exterior insulation
Transmittance / Resistance without Anomaly	U_w, R_w, U_g,	"clear wall" U- and R-value w = wood framed wall without balcony g = glazed sliding door
Transmittance / Resistance	U, R	U and R-values for the overall assembly
Surface Temperature Index[1]	T_i	0 = exterior temperature 1 = interior temperature
Linear Transmittance	ψ	Incremental increase in transmittance per linear length of balcony

[1]Assumptions and limitations for surface temperatures identified in ASHRAE 1365-RP

Nominal (1D) vs. Assembly Performance Indicators

Base Assembly – Wall

Exterior Insulation 1D R-Value (RSI)	R_{1D} ft²·hr·°F / Btu (m² K / W)	R_w ft²·hr·°F / Btu (m² K / W)	U_w Btu/ft² ·hr ·°F (W/m² K)
R-10 (1.76)	R-31.6 (5.56)	R-29.2 (5.14)	0.034 (0.19)
R-15 (2.64)	R-36.6 (6.44)	R-33.7 (5.93)	0.030 (0.17)

Base Assembly – Sliding Door

$U_{centre\ of\ glass}$ Btu/ft² ·hr ·°F (W/m² K)	U_g Btu/ft² ·hr ·°F (W/m² K)
0.321 (1.82)	0.323 (1.83)

Balcony Transition Linear Transmittance

Exterior Insulation 1D R-Value (RSI)	R ft²·hr·°F / Btu (m² K / W)	U Btu/ft² ·hr ·°F (W/m² K)	ψ Btu/ft ·hr·°F (W/m K)
R-10 (1.76)	R-5.9 (1.04)	0.170 (0.97)	0.072 (0.125)
R-15 (2.64)	R-6.0 (1.06)	0.166 (0.95)	0.067 (0.115)

Temperature Indices

	R10	R15	
T_{i1}	0.34	0.43	Min T on sheathing, between studs and at fasteners
T_{i2}	0.45	0.54	Max T on sheathing, below floor header beam
T_{i3}	0.49	0.49	Min T on frame, at edge of glass
T_{i4}	0.31	0.34	Min T on rim joist, between floor joists

Detail 8.2.4

Exterior and Interior Insulated 2x6 Wood Stud (16" o.c.) Wall Assembly with Wood Strapping Supporting Fiber Cement Board – Independently Supported Balcony Intersection

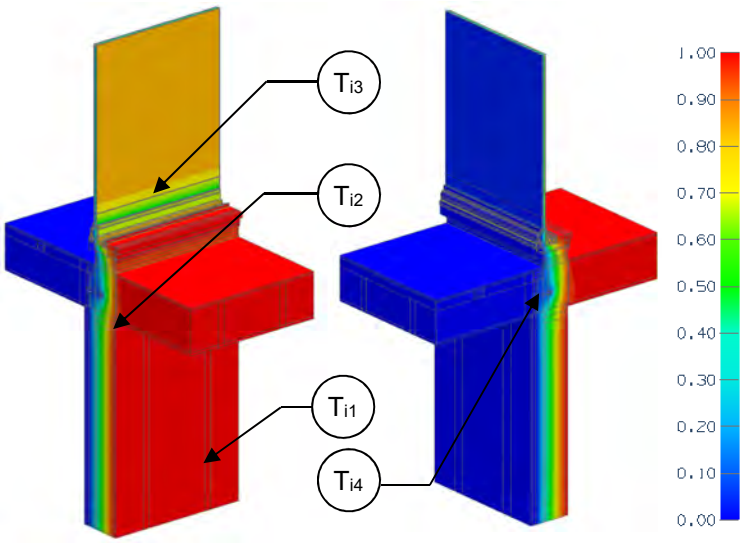

View from Interior View from Exterior

Thermal Performance Indicators

Assembly 1D (Nominal) R-Value	R_{1D}	R-21.6 (3.80 RSI) + exterior insulation
Transmittance / Resistance without Anomaly	U_w, R_w, U_g,	"clear wall" U- and R-value w = wood framed wall without balcony g = glazed sliding door
Transmittance / Resistance	U, R	U and R-values for the overall assembly
Surface Temperature Index[1]	T_i	0 = exterior temperature 1 = interior temperature
Linear Transmittance	ψ	Incremental increase in transmittance per linear length of balcony

[1]Assumptions and limitations for surface temperatures identified in ASHRAE 1365-RP

Nominal (1D) vs. Assembly Performance Indicators

Base Assembly – Wall

Exterior Insulation 1D R-Value (RSI)	R_{1D} ft²·hr·°F / Btu (m² K / W)	R_w ft²·hr·°F / Btu (m² K / W)	U_w Btu/ft² ·hr ·°F (W/m² K)
R-10 (1.76)	R-31.6 (5.56)	R-29.2 (5.14)	0.034 (0.19)
R-15 (2.64)	R-36.6 (6.44)	R-33.7 (5.93)	0.030 (0.17)

Base Assembly – Sliding Door

$U_{centre\ of\ glass}$ Btu/ft² ·hr ·°F (W/m² K)	U_g Btu/ft² ·hr ·°F (W/m² K)
0.321 (1.82)	0.323 (1.83)

Balcony Transition Linear Transmittance

Exterior Insulation 1D R-Value (RSI)	R ft²·hr·°F / Btu (m² K / W)	U Btu/ft² ·hr ·°F (W/m² K)	ψ Btu/ft ·hr·°F (W/m K)
R-10 (1.76)	R-5.9 (1.04)	0.169 (0.96)	0.083 (0.143)
R-15 (2.64)	R-6.0 (1.06)	0.166 (0.94)	0.078 (0.134)

Temperature Indices

	R10	R15	
T_{i1}	0.37	0.43	Min T on sheathing, at fasteners along studs
T_{i2}	0.43	0.51	Max T on sheathing, at studs below floor header beam
T_{i3}	0.49	0.49	Min T on frame, at edge of glass
T_{i4}	0.22	0.22	Min T at balcony bolts, between floor joists

Detail 8.2.5

Exterior and Interior Insulated 2x6 Wood Stud (16" o.c.) Wall Assembly with Wood Strapping and Continuous Insulation Supporting Fiber Cement Board – Cantilevered Floor Intersection

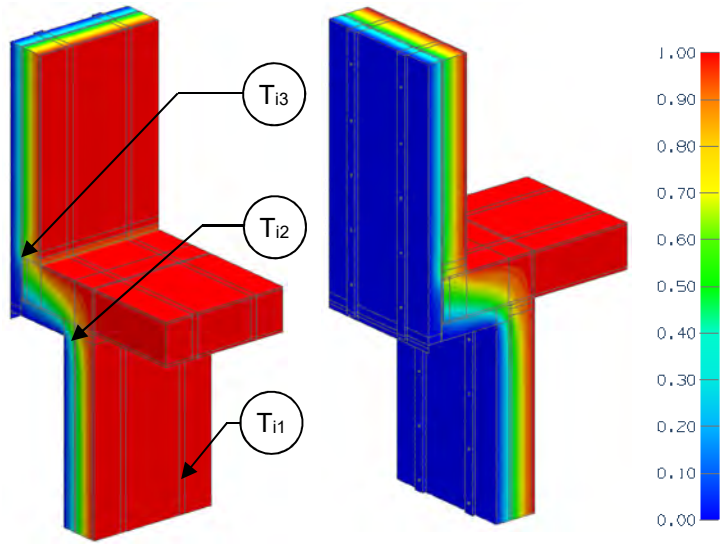

View from Interior View from Exterior

Thermal Performance Indicators

Assembly 1D (Nominal) R-Value	R_{1D}	R-21.6 (3.80 RSI) + exterior insulation
Transmittance / Resistance without Anomaly	U_w, R_w, U_f, R_f,	"clear field" U- and R-value w = wood framed wall without floor f = floor assembly
Transmittance / Resistance	U, R	U and R-values for the overall assembly
Surface Temperature Index[1]	T_i	0 = exterior temperature 1 = interior temperature
Linear Transmittance	ψ	Incremental increase in transmittance per linear length of soffit

[1]Assumptions and limitations for surface temperatures identified in ASHRAE 1365-RP

Nominal (1D) vs. Assembly Performance Indicators

Base Assembly – Wall

Exterior Insulation 1D R-Value (RSI)	R_{1D} ft²·hr·°F / Btu (m² K / W)	R_w ft²·hr·°F / Btu (m² K / W)	U_w Btu/ft² ·hr ·°F (W/m² K)
R-10 (1.76)	R-31.6 (5.56)	R-29.2 (5.14)	0.034 (0.19)
R-15 (2.64)	R-36.6 (6.44)	R-33.7 (5.93)	0.030 (0.17)

Base Assembly – Floor

Exterior Insulation 1D R-Value (RSI)	R_f ft²·hr·°F / Btu (m² K / W)	U_f Btu/ft² ·hr ·°F (W/m² K)
R-10 (1.76)	R-31.4 (5.53)	0.032 (0.18)
R-15 (2.64)	R-36.1 (6.36)	0.028 (0.16)

Floor Transition Linear Transmittance

Exterior Insulation 1D R-Value (RSI)	R ft²·hr·°F / Btu (m² K / W)	U Btu/ft² ·hr ·°F (W/m² K)	ψ Btu/ft ·hr·°F (W/m K)
R-10 (1.76)	R-26.2 (4.61)	0.04 (0.22)	0.034 (0.059)
R-15 (2.64)	R-31.2 (5.49)	0.03 (0.18)	0.021 (0.036)

Temperature Indices

	R10	R15	
T_{i1}	0.36	0.43	Min T on sheathing, at fasteners along studs
T_{i2}	0.67	0.75	Max T on sheathing, below floor at bottom of header plate
T_{i3}	0.13	0.26	Min T on rim joist and overhang sheathing, at beam and overhang sheathing intersection

Detail 8.2.6

Interior Insulated Double Framed Wall 2x6 and 2x4 Wood Stud (16" o.c.) Wall Assembly with 2" Gap – Rim Joist and Floor Intersection

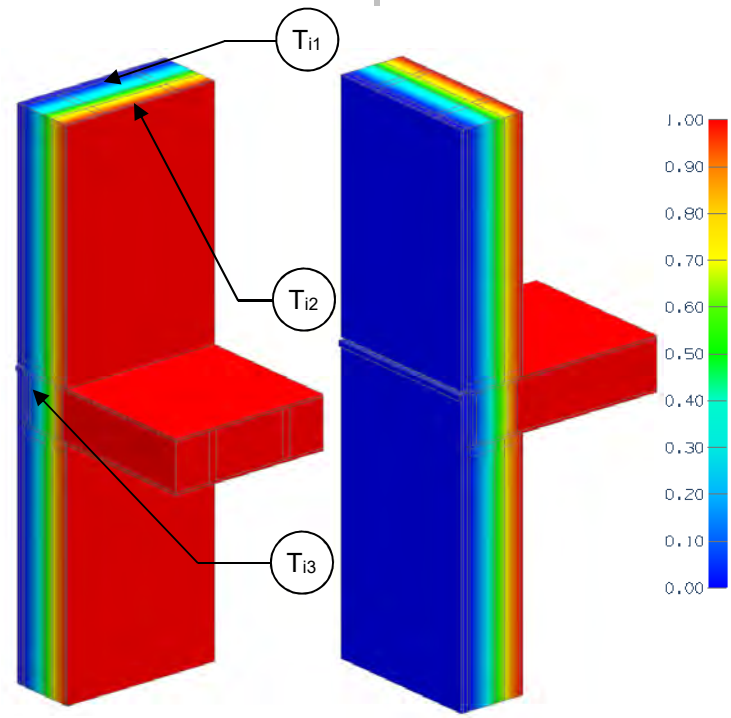

View from Interior View from Exterior

Thermal Performance Indicators

Assembly 1D (Nominal) R-Value	R_{1D}	R-2.5 (0.44 RSI) + fill insulation
Transmittance / Resistance without Anomaly	U_o, R_o	"clear wall" U- and R-value, without floor
Transmittance / Resistance	U, R	U and R-values for the overall assembly
Surface Temperature Index[1]	T_i	0 = exterior temperature 1 = interior temperature
Linear Transmittance	ψ	Incremental increase in transmittance per linear length of wood framed floor

[1]Assumptions and limitations for surface temperatures identified in ASHRAE 1365-RP

Nominal (1D) vs. Assembly Performance Indicators

Fill Insulation 1D R-Value (RSI)	R_{1D} ft²·hr·°F / Btu (m² K / W)	R_o ft²·hr·°F / Btu (m² K / W)	U_o Btu/ft² ·hr ·°F (W/m² K)	R ft²·hr·°F / Btu (m² K / W)	U Btu/ft² ·hr ·°F (W/m² K)	ψ Btu/ft ·hr·°F (W/m K)
R-38.5 (6.78)	R-41.0 (7.23)	R-38.0 (6.70)	0.026 (0.15)	R-36.4 (6.42)	0.027 (0.16)	0.010 (0.018)
R-44.0 (7.75)	R-46.5 (8.19)	R-42.4 (7.47)	0.024 (0.13)	R-40.1 (7.07)	0.025 (0.14)	0.012 (0.020)
R-55.0 (9.69)	R-57.5 (10.13)	R-50.8 (8.94)	0.020 (0.11)	R-47.2 (8.31)	0.021 (0.12)	0.013 (0.023)
R-66.0 (11.62)	R-68.5 (12.07)	R-58.9 (10.37)	0.017 (0.10)	R-53.7 (9.46)	0.019 (0.11)	0.014 (0.025)

Temperature Indices

	R38.5	R44.0	R55.0	R66.0	
T_{i1}	0.03	0.03	0.02	0.02	Min T on sheathing, between studs at centre of stud cavity
T_{i2}	0.95	0.95	0.95	0.96	Min T on gypsum, between studs at centre of stud cavity
T_{i3}	0.09	0.09	0.08	0.07	Min T on rim joist, between floor joists

Detail 8.2.7

Interior Insulated Double Framed Wall 2x6 and 2x4 Wood Stud (16" o.c.) Wall Assembly with 3" Gap – Rim Joist and Floor Intersection

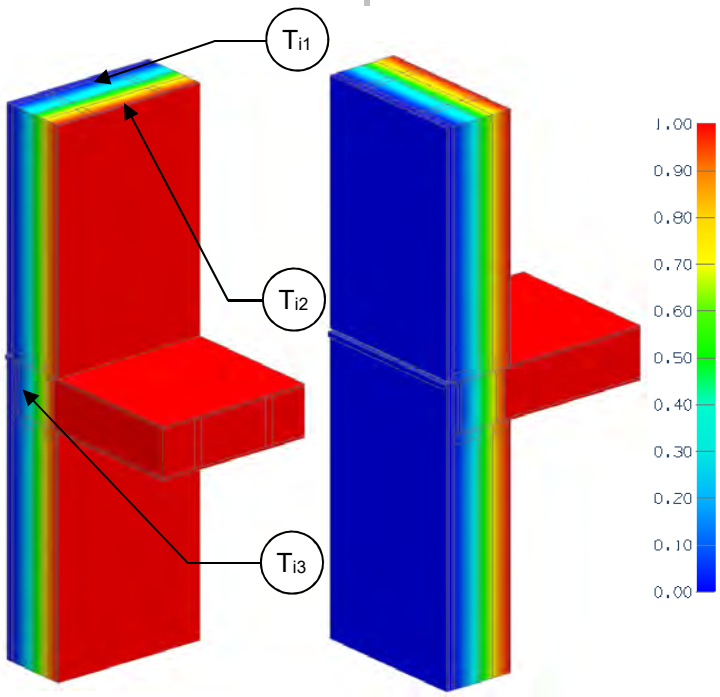

View from Interior View from Exterior

Thermal Performance Indicators

Assembly 1D (Nominal) R-Value	R_{1D}	R-2.5 (0.44 RSI) + fill insulation
Transmittance / Resistance without Anomaly	U_o, R_o	"clear wall" U- and R-value, without floor
Transmittance / Resistance	U, R	U and R-values for the overall assembly
Surface Temperature Index[1]	T_i	0 = exterior temperature 1 = interior temperature
Linear Transmittance	ψ	Incremental increase in transmittance per linear length of wood framed floor

[1]Assumptions and limitations for surface temperatures identified in ASHRAE 1365-RP

Nominal (1D) vs. Assembly Performance Indicators

Fill Insulation 1D R-Value (RSI)	R_{1D} ft²·hr·°F / Btu (m² K / W)	R_o ft²·hr·°F / Btu (m² K / W)	U_o Btu/ft² ·hr ·°F (W/m² K)	R ft²·hr·°F / Btu (m² K / W)	U Btu/ft² ·hr ·°F (W/m² K)	ψ Btu/ft ·hr·°F (W/m K)
R-42.0 (7.40)	R-44.5 (7.84)	R-41.6 (7.32)	0.024 (0.14)	R-39.9 (7.02)	0.025 (0.14)	0.009 (0.016)
R-48.0 (8.45)	R-50.5 (8.90)	R-46.4 (8.18)	0.022 (0.12)	R-44.1 (7.76)	0.023 (0.13)	0.010 (0.017)
R-60.0 (10.57)	R-62.5 (11.01)	R-55.9 (9.84)	0.018 (0.10)	R-52.1 (9.17)	0.019 (0.11)	0.011 (0.020)
R-72.0 (12.68)	R-74.5 (13.13)	R-65.0 (11.45)	0.015 (0.09)	R-59.6 (10.49)	0.017 (0.10)	0.012 (0.021)

Temperature Indices

	R42.0	R48.0	R60.0	R72.0	
T_{i1}	0.03	0.02	0.02	0.02	Min T on sheathing, between studs at centre of stud cavity
T_{i2}	0.95	0.96	0.96	0.96	Min T on gypsum, between studs at centre of stud cavity
T_{i3}	0.08	0.08	0.07	0.06	Min T on rim joist, between floor joists

Detail 8.2.8

Interior Insulated Double Framed Wall 2x6 and 2x4 Wood Stud (16" o.c.) Wall Assembly with 4" Gap – Rim Joist and Floor Intersection

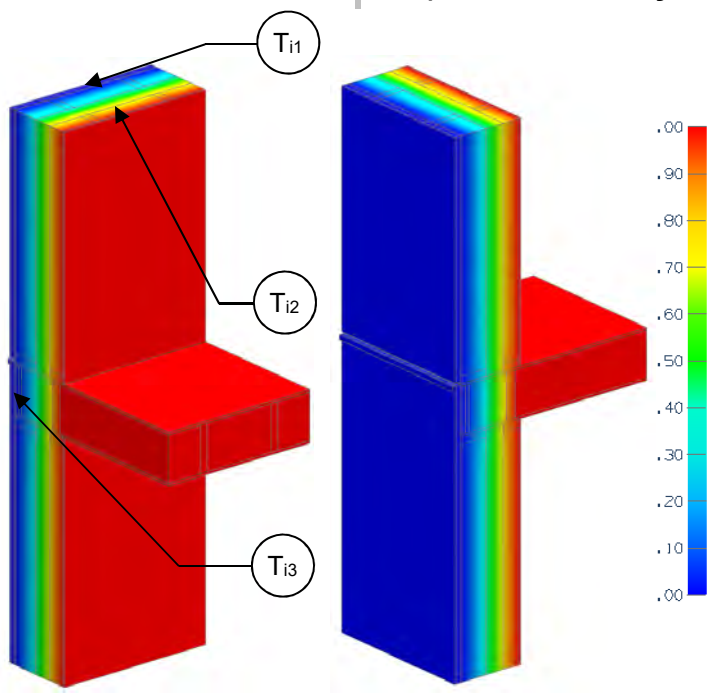

View from Interior View from Exterior

Thermal Performance Indicators

Assembly 1D (Nominal) R-Value	R_{1D}	R-2.5 (0.44 RSI) + fill insulation
Transmittance / Resistance without Anomaly	U_o, R_o	"clear wall" U- and R-value, without floor
Transmittance / Resistance	U, R	U and R-values for the overall assembly
Surface Temperature Index[1]	T_i	0 = exterior temperature 1 = interior temperature
Linear Transmittance	ψ	Incremental increase in transmittance per linear length of wood framed floor

[1]Assumptions and limitations for surface temperatures identified in ASHRAE 1365-RP

Nominal (1D) vs. Assembly Performance Indicators

Fill Insulation 1D R-Value (RSI)	R_{1D} ft²·hr·°F / Btu (m² K / W)	R_o ft²·hr·°F / Btu (m² K / W)	U_o Btu/ft² ·hr ·°F (W/m² K)	R ft²·hr·°F / Btu (m² K / W)	U Btu/ft² ·hr ·°F (W/m² K)	ψ Btu/ft ·hr·°F (W/m K)
R-45.5 (8.01)	R-48.0 (8.46)	R-45.1 (7.94)	0.022 (0.13)	R-43.3 (7.62)	0.023 (0.13)	0.008 (0.014)
R-52.0 (9.16)	R-54.5 (9.60)	R-50.5 (8.89)	0.020 (0.11)	R-48.0 (8.45)	0.021 (0.12)	0.009 (0.016)
R-65.0 (11.45)	R-67.5 (11.89)	R-60.9 (10.73)	0.016 (0.09)	R-56.9 (10.03)	0.018 (0.10)	0.010 (0.018)
R-78.0 (13.74)	R-80.5 (14.18)	R-71.1 (12.52)	0.014 (0.08)	R-65.3 (11.51)	0.015 (0.09)	0.011 (0.019)

Temperature Indices

	R45.5	R52.0	R65.0	R78.0	
T_{i1}	0.02	0.02	0.02	0.02	Min T on sheathing, between studs at centre of stud cavity
T_{i2}	0.96	0.96	0.96	0.96	Min T on gypsum, between studs at centre of stud cavity
T_{i3}	0.07	0.07	0.07	0.06	Min T on rim joist, between floor joists

Detail 8.2.9

Interior Insulated Double Framed Wall 2x6 and 2x4 Wood Stud (16" o.c.) Wall Assembly with 2" Gap – Insulated Rim Joist and Floor Intersection

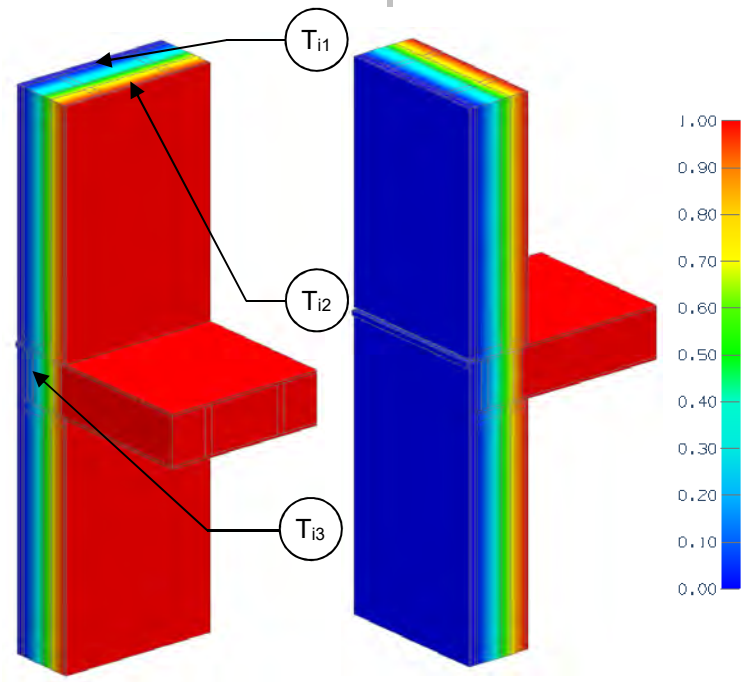

View from Interior View from Exterior

Thermal Performance Indicators

Assembly 1D (Nominal) R-Value	R_{1D}	R-2.5 (0.44 RSI) + fill insulation
Transmittance / Resistance without Anomaly	U_o, R_o	"clear wall" U- and R-value, without floor
Transmittance / Resistance	U, R	U and R-values for the overall assembly
Surface Temperature Index[1]	T_i	0 = exterior temperature 1 = interior temperature
Linear Transmittance	ψ	Incremental increase in transmittance per linear length of wood framed floor

[1]Assumptions and limitations for surface temperatures identified in ASHRAE 1365-RP

Nominal (1D) vs. Assembly Performance Indicators

Fill Insulation 1D R-Value (RSI)	R_{1D} ft²·hr·°F / Btu (m² K / W)	R_o ft²·hr·°F / Btu (m² K / W)	U_o Btu/ft² ·hr ·°F (W/m² K)	R ft²·hr·°F / Btu (m² K / W)	U Btu/ft² ·hr ·°F (W/m² K)	ψ Btu/ft ·hr·°F (W/m K)
R-38.5 (6.78)	R-41.0 (7.23)	R-38.0 (6.70)	0.026 (0.15)	R-36.6 (6.44)	0.027 (0.16)	0.009 (0.016)
R-44.0 (7.75)	R-46.5 (8.19)	R-42.4 (7.47)	0.024 (0.13)	R-40.3 (7.09)	0.025 (0.14)	0.011 (0.019)
R-55.0 (9.69)	R-57.5 (10.13)	R-50.8 (8.94)	0.020 (0.11)	R-47.3 (8.32)	0.021 (0.12)	0.013 (0.022)
R-66.0 (11.62)	R-68.5 (12.07)	R-58.9 (10.37)	0.017 (0.10)	R-53.8 (9.47)	0.019 (0.11)	0.014 (0.025)

Temperature Indices

	R38.5	R44.0	R55.0	R66.0	
T_{i1}	0.03	0.03	0.02	0.02	Min T on sheathing, between studs at centre of stud cavity
T_{i2}	0.95	0.95	0.95	0.96	Min T on gypsum, between studs at centre of stud cavity
T_{i3}	0.15	0.14	0.14	0.13	Min T on rim joist, between floor joists

Detail 8.2.10

Interior Insulated Double Framed Wall 2x6 and 2x4 Wood Stud (16" o.c.) Wall Assembly with 3" Gap – Insulated Rim Joist and Floor Intersection

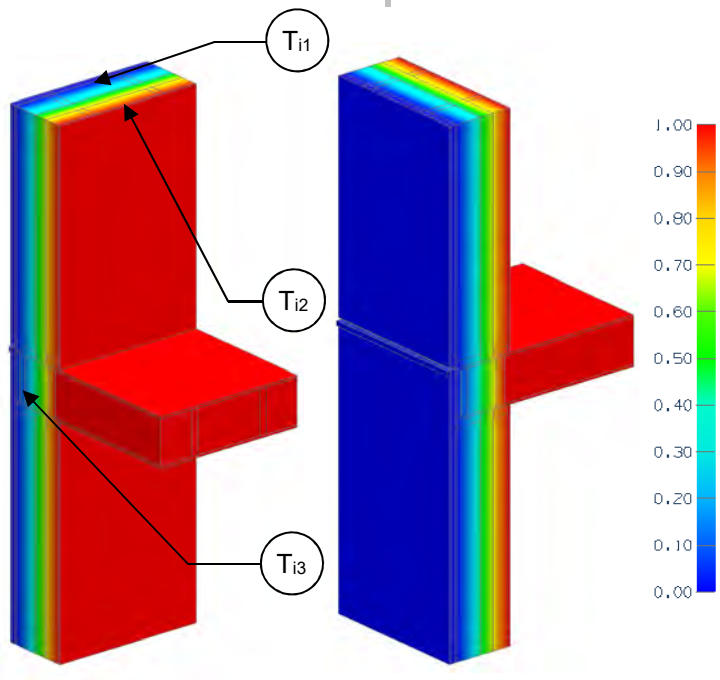

View from Interior View from Exterior

Thermal Performance Indicators

Assembly 1D (Nominal) R-Value	R_{1D}	R-2.5 (0.44 RSI) + fill insulation
Transmittance / Resistance without Anomaly	U_o, R_o	"clear wall" U- and R-value, without floor
Transmittance / Resistance	U, R	U and R-values for the overall assembly
Surface Temperature Index[1]	T_i	0 = exterior temperature 1 = interior temperature
Linear Transmittance	ψ	Incremental increase in transmittance per linear length of wood framed floor

[1]Assumptions and limitations for surface temperatures identified in ASHRAE 1365-RP

Nominal (1D) vs. Assembly Performance Indicators

Fill Insulation 1D R-Value (RSI)	R_{1D} ft²·hr·°F / Btu (m² K / W)	R_o ft²·hr·°F / Btu (m² K / W)	U_o Btu/ft² ·hr ·°F (W/m² K)	R ft²·hr·°F / Btu (m² K / W)	U Btu/ft² ·hr ·°F (W/m² K)	ψ Btu/ft ·hr·°F (W/m K)
R-42.0 (7.40)	R-44.5 (7.84)	R-41.6 (7.32)	0.024 (0.14)	R-40.0 (7.04)	0.025 (0.14)	0.008 (0.014)
R-48.0 (8.45)	R-50.5 (8.90)	R-46.4 (8.18)	0.022 (0.12)	R-44.2 (7.78)	0.023 (0.13)	0.010 (0.017)
R-60.0 (10.57)	R-62.5 (11.01)	R-55.9 (9.84)	0.018 (0.10)	R-52.2 (9.18)	0.019 (0.11)	0.011 (0.019)
R-72.0 (12.68)	R-74.5 (13.13)	R-65.0 (11.45)	0.015 (0.09)	R-59.6 (10.50)	0.017 (0.10)	0.012 (0.021)

Temperature Indices

	R42.0	R48.0	R60.0	R72.0	
T_{i1}	0.03	0.03	0.02	0.02	Min T on sheathing, between studs at centre of stud cavity
T_{i2}	0.96	0.96	0.96	0.96	Min T on gypsum, between studs at centre of stud cavity
T_{i3}	0.14	0.13	0.13	0.12	Min T on rim joist, between floor joists

Detail 8.2.11

Interior Insulated Double Framed Wall 2x6 and 2x4 Wood Stud (16" o.c.) Wall Assembly with 4" Gap – Insulated Rim Joist and Floor Intersection

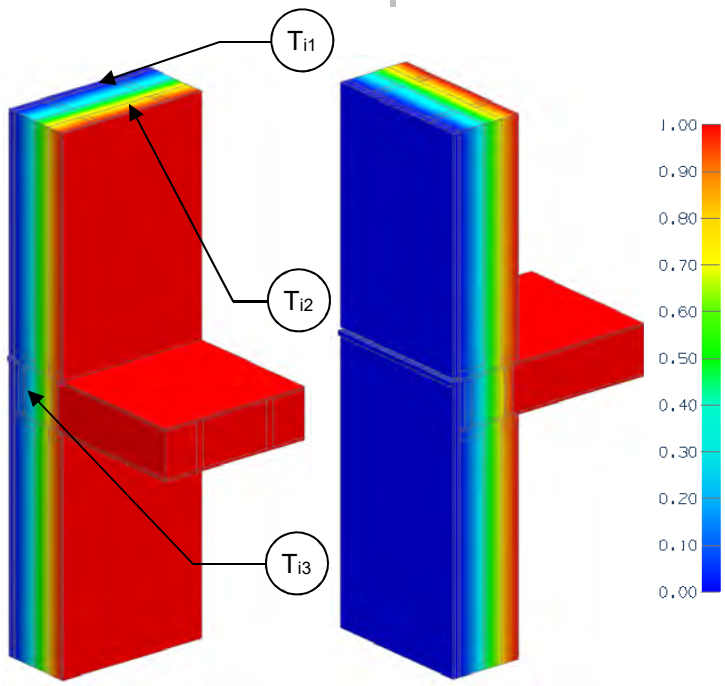

View from Interior View from Exterior

Thermal Performance Indicators

Assembly 1D (Nominal) R-Value	R_{1D}	R-2.5 (0.44 RSI) + fill insulation
Transmittance / Resistance without Anomaly	U_o, R_o	"clear wall" U- and R-value, without floor
Transmittance / Resistance	U, R	U and R-values for the overall assembly
Surface Temperature Index[1]	T_i	0 = exterior temperature 1 = interior temperature
Linear Transmittance	ψ	Incremental increase in transmittance per linear length of wood framed floor

[1]Assumptions and limitations for surface temperatures identified in ASHRAE 1365-RP

Nominal (1D) vs. Assembly Performance Indicators

Fill Insulation 1D R-Value (RSI)	R_{1D} ft²·hr·°F / Btu (m² K / W)	R_o ft²·hr·°F / Btu (m² K / W)	U_o Btu/ft² ·hr ·°F (W/m² K)	R ft²·hr·°F / Btu (m² K / W)	U Btu/ft² ·hr ·°F (W/m² K)	ψ Btu/ft ·hr·°F (W/m K)
R-45.5 (8.01)	R-48.0 (8.46)	R-45.1 (7.94)	0.022 (0.13)	R-43.4 (7.65)	0.023 (0.13)	0.007 (0.013)
R-52.0 (9.16)	R-54.5 (9.60)	R-50.5 (8.89)	0.020 (0.11)	R-48.1 (8.47)	0.021 (0.12)	0.009 (0.015)
R-65.0 (11.45)	R-67.5 (11.89)	R-60.9 (10.73)	0.016 (0.09)	R-57.0 (10.04)	0.018 (0.10)	0.010 (0.017)
R-78.0 (13.74)	R-80.5 (14.18)	R-71.1 (12.52)	0.014 (0.08)	R-65.4 (11.51)	0.015 (0.09)	0.011 (0.019)

Temperature Indices

	R45.5	R52.0	R65.0	R78.0	
T_{i1}	0.03	0.02	0.02	0.02	Min T on sheathing, between studs at centre of stud cavity
T_{i2}	0.96	0.96	0.96	0.96	Min T on gypsum, between studs at centre of stud cavity
T_{i3}	0.13	0.12	0.11	0.11	Min T on rim joist, between floor joists

Detail 8.3.1

Exterior and Interior Insulated 2x6 Wood Stud (16" o.c.) Wall Assembly with Wood Strapping and Continuous Insulation Supporting Rainscreen Fiber Cement Board – Vinyl Window Intersection

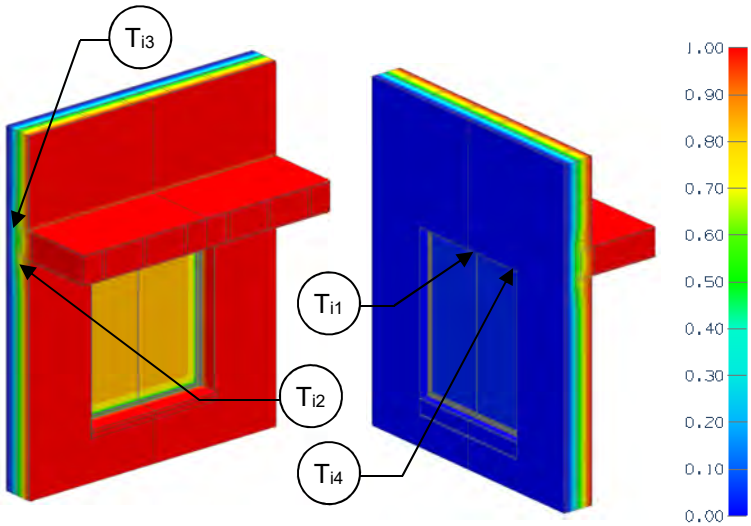

View from Interior View from Exterior

Thermal Performance Indicators

Assembly 1D (Nominal) R-Value	R_{1D}	R-21.6 (3.80 RSI) + exterior insulation
Transmittance / Resistance without Anomaly	U_w, R_w, U_g	"clear wall" U- and R-value w = wood framed wall without floor joist or glazing g = glazing
Transmittance / Resistance	U_s, R_s, U_t, R_t,	U and R-values for s = wood frame wall + floor joist t = combined wall, glazing, and floor joist
Surface Temperature Index[1]	T_i	0 = exterior temperature 1 = interior temperature
Linear Transmittance	ψ_s, ψ_g	Incremental increase in transmittance per linear length of s = floor g = glazing transition

[1]Assumptions and limitations for surface temperatures identified in ASHRAE 1365-RP

Nominal (1D) vs. Assembly Performance Indicators

Base Assembly – Wall

Exterior Insulation 1D R-Value (RSI)	R_{1D} ft²·hr·°F / Btu (m² K / W)	R_w ft²·hr·°F / Btu (m² K / W)	U_w Btu/ft² ·hr ·°F (W/m² K)
R-5 (0.88)	R-26.6 (4.68)	R-23.4 (4.12)	0.041 (0.23)
R-15 (2.64)	R-36.6 (6.44)	R-33.4 (5.88)	0.030 (0.17)

Base Assembly - Glazing

$U_{centre\ of\ glass}$ Btu/ft² ·hr ·°F (W/m² K)	U_g Btu/ft² ·hr ·°F (W/m² K)
0.321 (1.82)	0.344 (1.95)

Floor Linear Transmittance

Exterior Insulation 1D R-Value (RSI)	R_s ft²·hr·°F / Btu (m² K / W)	U_s Btu/ft² ·hr ·°F (W/m² K)	ψ_s Btu/ft ·hr ·°F (W/m K)
R-5 (0.88)	R-21.6 (3.81)	0.046 (0.26)	0.049 (0.084)
R-15 (2.64)	R-28.8 (5.06)	0.035 (0.20)	0.045 (0.077)

Window Transition Linear Transmittance

R_t ft²·hr·°F / Btu (m² K / W)	U_t Btu/ft² ·hr ·°F (W/m² K)	ψ_g[2] Btu/ft ·hr·°F (W/m K)
R-7.5 (1.33)	0.133 (0.75)	0.057 (0.099)
R-8.1 (1.42)	0.124 (0.70)	0.056 (0.097)

[2]For the linear transmittance, use the window perimeter

Temperature Indices

	R5	R15	
T_{i1}	0.21	0.30	Min T on sheathing, between window head and floor
T_{i2}	0.65	0.67	Max T on sheathing, below ceiling and floor header beam
T_{i3}	0.42	0.55	Min T on floor header beam, between floor joists
T_{i4}	0.40	0.39	Min T on window glass, at top corner of glazing

Detail 8.3.2

Exterior and Interior Insulated 2x6 Wood Stud (16" o.c.) Wall Assembly with Wood Strapping and Continuous Insulation Supporting Rainscreen Fiber Cement Board – Aluminum Window Intersection

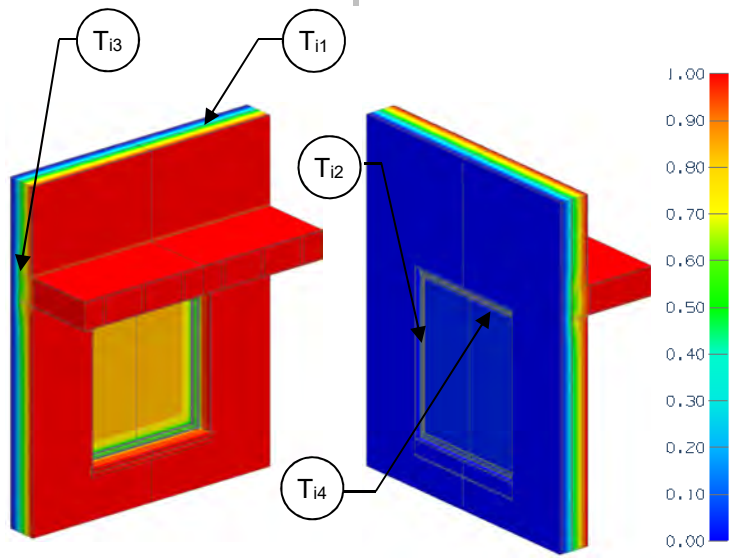

View from Interior View from Exterior

Thermal Performance Indicators

Assembly 1D (Nominal) R-Value	R_{1D}	R-21.6 (3.80 RSI) + exterior insulation
Transmittance / Resistance without Anomaly	U_w, R_w, U_g	"clear wall" U- and R-value w = wood framed wall without floor joist or glazing g = glazing
Transmittance / Resistance	U_s, R_s, U_t, R_t	U and R-values for s = wood frame wall + floor joist t = combined wall, glazing, and floor joist
Surface Temperature Index[1]	T_i	0 = exterior temperature 1 = interior temperature
Linear Transmittance	ψ_s, ψ_g	Incremental increase in transmittance per linear length of s = floor g = glazing transition

[1]Assumptions and limitations for surface temperatures identified in ASHRAE 1365-RP

Nominal (1D) vs. Assembly Performance Indicators

Base Assembly – Wall

Exterior Insulation 1D R-Value (RSI)	R_{1D} ft²·hr·°F / Btu (m² K / W)	R_w ft²·hr·°F / Btu (m² K / W)	U_w Btu/ft² ·hr ·°F (W/m² K)
R-5 (0.88)	R-26.6 (4.68)	R-24.6 (4.33)	0.041 (0.23)
R-15 (2.64)	R-36.6 (6.44)	R-33.7 (5.93)	0.030 (0.17)

Base Assembly - Glazing

$U_{centre\ of\ glass}$ Btu/ft² ·hr ·°F (W/m² K)	U_g Btu/ft² ·hr ·°F (W/m² K)
0.321 (1.82)	0.400 (2.27)

Floor Linear Transmittance

Exterior Insulation 1D R-Value (RSI)	R_s ft²·hr·°F / Btu (m² K / W)	U_s Btu/ft² ·hr ·°F (W/m² K)	ψ_s Btu/ft² ·hr ·°F (W/m² K)
R-5 (0.88)	R-21.9 (3.85)	0.046 (0.26)	0.044 (0.076)
R-15 (2.64)	R-30.1 (5.30)	0.033 (0.19)	0.031 (0.054)

Window Transition Linear Transmittance

R_t ft²·hr·°F / Btu (m² K / W)	U_t Btu/ft² ·hr ·°F (W/m² K)	ψ_g[2] Btu/ft ·hr·°F (W/m K)
R-6.3 (1.11)	0.159 (0.90)	0.139 (0.240)
R-6.9 (1.21)	0.146 (0.83)	0.099 (0.171)

Temperature Indices

	R5	R15	
T_{i1}	0.21	0.34	Min T on sheathing, at fasteners adjacent to studs
T_{i2}	0.50	0.72	Max T on sheathing, along jamb of window opening
T_{i3}	0.42	0.55	Min T on floor header beam, between floor joists
T_{i4}	0.37	0.38	Min T on window glass, at top corner of glazing

[2]For the linear transmittance, use the window perimeter

Detail 8.3.3

Exterior and Interior Insulated 2x6 Wood Stud (8" o.c.) Wall Assembly with Wood Strapping and Continuous Insulation Supporting Rainscreen Fiber Cement Board – Vinyl Window Intersection

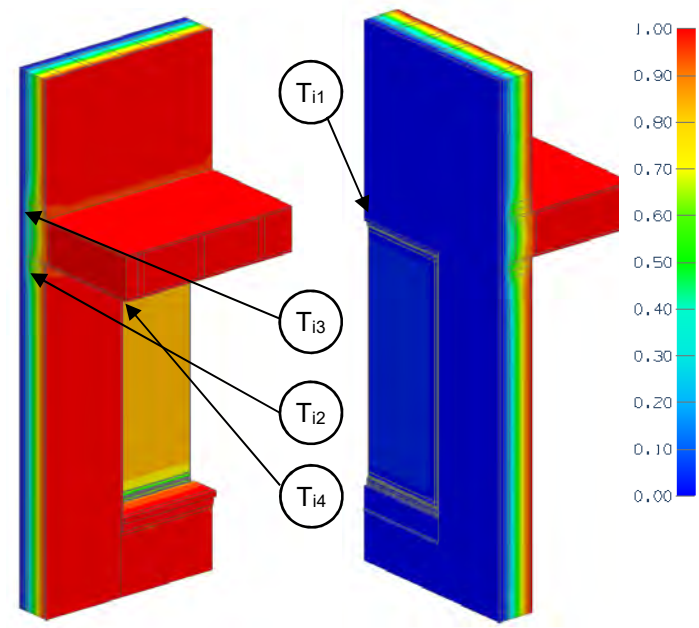

View from Interior **View from Exterior**

Thermal Performance Indicators

Assembly 1D (Nominal) R-Value	R_{1D}	R-17.2 (3.03 RSI) + exterior insulation
Transmittance / Resistance without Anomaly	U_w, R_w, U_g	"clear wall" U- and R-value, w = wood framed wall without joist or glazing g = glazing
Transmittance / Resistance	U_s, R_s, U_t, R_t	U and R-values for s = wood framed wall + floor joist t = combined wall, glazing, and floor joist
Surface Temperature Index[1]	T_i	0 = exterior temperature 1 = interior temperature
Linear Transmittance	ψ_s, ψ_g	Incremental increase in transmittance per linear length of s = floor g = glazing transition

[1]Assumptions and limitations for surface temperatures identified in ASHRAE 1365-RP

Nominal (1D) vs. Assembly Performance Indicators

Base Assembly - Wall

Exterior Insulation 1D R-Value (RSI)	R_{1D} ft²·hr·°F / Btu (m² K / W)	R_w ft²·hr·°F / Btu (m² K / W)	U_w Btu/ft² ·hr ·°F (W/m² K)
R-5 (0.88)	R-22.2 (3.91)	22.0 (3.88)	0.045 (0.26)
R-15 (2.64)	R-32.2 (5.67)	32.0 (5.64)	0.031 (0.18)

Base Assembly Glazing

$U_{centre\ of\ glass}$ Btu/ft² ·hr ·°F (W/m² K)	U_g Btu/ft² ·hr ·°F (W/m² K)
0.321 (1.82)	0.331 (1.88)

Floor Linear Transmittance

Exterior Insulation 1D R-Value (RSI)	R_s ft²·hr·°F / Btu (m² K / W)	U_s Btu/ft² ·hr ·°F (W/m² K)	ψ_s Btu/ft ·hr ·°F (W/m K)
R-5 (0.88)	20.8 (3.66)	0.048 (0.27)	0.026 (0.046)
R-15 (2.64)	30.0 (5.28)	0.033 (0.19)	0.021 (0.036)

[2]For the linear transmittance, use the window perimeter

Window Transition Linear Transmittance

R_t ft²·hr·°F / Btu (m² K / W)	U_t Btu/ft² ·hr ·°F (W/m² K)	ψ_g[2] Btu/ft ·hr ·°F (W/m K)
7.3 (1.28)	0.137 (0.78)	0.049 (0.085)
7.8 (1.38)	0.127 (0.72)	0.053 (0.092)

Temperature Indices

	R5	R15	
T_{i1}	0.24	0.26	Min T on sheathing, between window head and floor
T_{i2}	0.51	0.64	Max T on sheathing, below ceiling and floor header beam
T_{i3}	0.42	0.54	Min T on floor header beam, between floor joists
T_{i4}	0.61	0.61	Min T on window glass, at top corner of glazing

Detail 8.3.4

Exterior Insulated 2x6 Wood Stud (16" o.c.) Wall Assembly with Wood Strapping and Continuous Insulation Supporting Rainscreen Fiber Cement Board – Triple Glazed Flange Mounted Vinyl Window Intersection with Window Positioned in Wood Framing

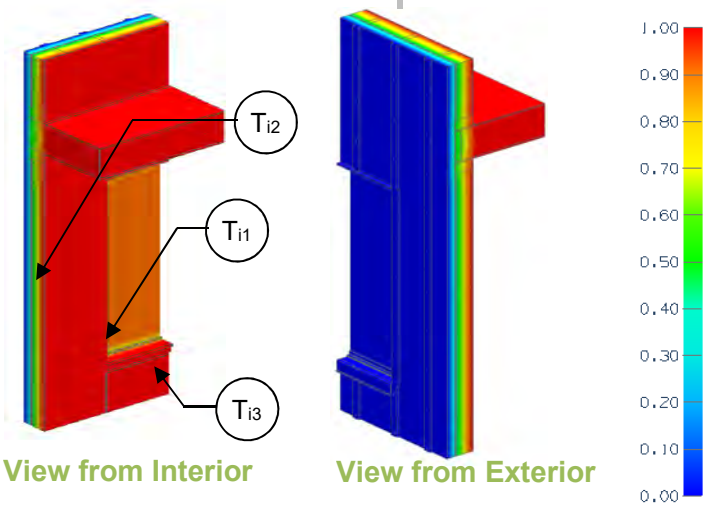

View from Interior View from Exterior

Thermal Performance Indicators

Assembly 1D (Nominal) R-Value	R_{1D}	R-3.2 (0.56 RSI) + exterior insulation
Transmittance / Resistance without Anomaly	U_w, R_w U_g,	"clear wall" U- and R-value: w = wall without floor g = glazing
Transmittance / Resistance	U_t, R_t	U and R-values for: t = combined wall + floor + window
Surface Temperature Index[1]	T_i	0 = exterior temperature 1 = interior temperature
Linear Transmittance	ψ	Incremental increase in transmittance per linear length

[1]Assumptions and limitations for surface temperatures identified in ASHRAE 1365-RP

Base Assembly – Glazing

$U_{centre\ of\ glass}$ Btu/ft^2 ·hr ·°F (W/m^2 K)	U_g Btu/ft^2 ·hr ·°F (W/m^2 K)
0.142 (0.81)	0.163 (0.92)

Nominal (1D) vs. Assembly Performance Indicators

Base Assembly – Wood Stud Clear Wall

Exterior Insulation 1D R-Value (RSI)	R_{1D} ft^2·hr·°F / Btu (m^2 K / W)	R_w ft^2·hr·°F / Btu (m^2 K / W)	U_w Btu/ft^2 ·hr ·°F (W/m^2 K)
R-5 (0.88)	R-8.2 (1.44)	R-8.5 (1.50)	0.117 (0.67)
R-10 (1.76)	R-13.2 (2.32)	R-12.9 (2.28)	0.077 (0.44)
R-15 (2.64)	R-18.2 (3.20)	R-17.1 (3.01)	0.059 (0.33)

Intermediate Floor Linear Transmittance

R_{floor} ft^2·hr·°F / Btu (m^2 K / W)	U_{floor} Btu/ft^2 ·hr ·°F (W/m^2 K)	ψ_{floor} Btu/ft^2 ·hr ·°F (W/m^2 K)
R-8.7 (1.53)	0.115 (0.65)	-0.025 (-0.043)
R-13.2 (2.33)	0.076 (0.43)	-0.016 (-0.028)
R-18.2 (3.20)	0.055 (0.31)	-0.035 (-0.061)

Window Transition Transmittance

Exterior Insulation 1D R-Value (RSI)	R_t ft^2·hr·°F / Btu (m^2 K / W)	U_t Btu/ft^2 ·hr ·°F (W/m^2 K)	ψ_{Head} Btu/ft ·hr ·°F (W/m K)	ψ_{Sill} Btu/ft ·hr ·°F (W/m K)	ψ_{Jamb} Btu/ft ·hr ·°F (W/m K)	ψ_{Total} Btu/ft ·hr ·°F (W/m K)
R-5 (0.88)	R-7.9 (1.40)	0.126 (0.72)	-0.028 (-0.049)	0.003 (0.006)	0.008 (0.015)	0.000 (0.000)
R-10 (1.76)	R-10.0 (1.76)	0.100 (0.57)	0.000 (0.000)	0.013 (0.023)	0.015 (0.026)	0.014 (0.024)
R-15 (2.64)	R-11.4 (2.00)	0.088 (0.50)	0.035 (0.061)	0.019 (0.034)	0.021 (0.036)	0.032 (0.056)

Temperature Indices

	R5	R10	R15	
T_{i1}	0.65	0.66	0.66	Min T on window frame, at bottom corner
T_{i2}	0.75	0.84	0.88	Max T on interior surface of sheathing between studs
T_{i3}	0.62	0.70	0.72	Min T on interior surface sheathing below window sill adjacent to wood stud

Detail 8.3.5

Exterior and Interior Insulated 2x6 Wood Stud (16" o.c.) Wall Assembly with Wood Strapping and Continuous Insulation Supporting Rainscreen Fiber Cement Board – Triple Glazed Flange Mounted Vinyl Window Intersection with Window Positioned in Wood Framing

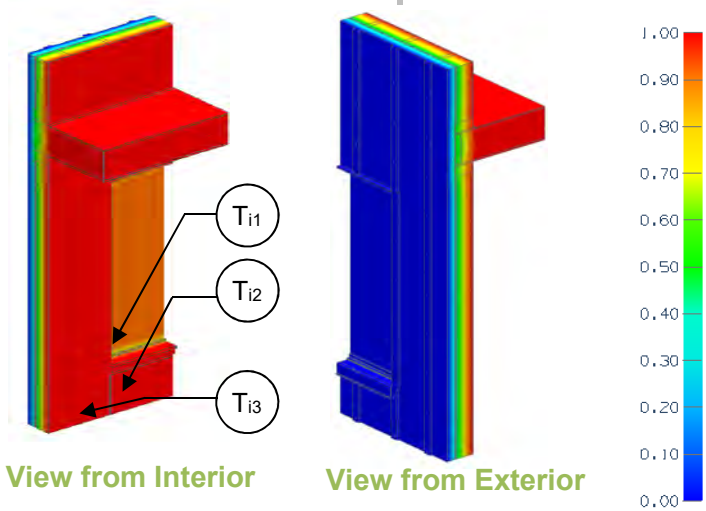

View from Interior View from Exterior

Thermal Performance Indicators

Assembly 1D (Nominal) R-Value	R_{1D}	R-21.6 (3.80 RSI) + exterior insulation
Transmittance / Resistance without Anomaly	U_w, R_w U_g,	"clear wall" U- and R-value: w = wall without floor g = glazing
Transmittance / Resistance	U_t, R_t	U and R-values for: t = combined wall + floor + window
Surface Temperature Index[1]	T_i	0 = exterior temperature 1 = interior temperature
Linear Transmittance	ψ	Incremental increase in transmittance per linear length

[1]Assumptions and limitations for surface temperatures identified in ASHRAE 1365-RP

Base Assembly – Glazing

$U_{centre\ of\ glass}$ Btu/ft^2 ·hr ·°F (W/m^2 K)	U_g Btu/ft^2 ·hr ·°F (W/m^2 K)
0.142 (0.81)	0.163 (0.92)

Nominal (1D) vs. Assembly Performance Indicators

Base Assembly – Wood Stud Clear Wall

Exterior Insulation 1D R-Value (RSI)	R_{1D} ft^2·hr·°F / Btu (m^2 K / W)	R_w ft^2·hr·°F / Btu (m^2 K / W)	U_w Btu/ft^2 ·hr ·°F (W/m^2 K)
R-5 (0.88)	R-26.6 (4.68)	R-24.6 (4.33)	0.041 (0.23)
R-10 (1.76)	R-31.6 (5.57)	R-29.2 (5.14)	0.034 (0.19)
R-15 (2.64)	R-36.6 (6.45)	R-33.7 (5.93)	0.030 (0.17)

Intermediate Floor Linear Transmittance

R_{floor} ft^2·hr·°F / Btu (m^2 K / W)	U_{floor} Btu/ft^2 ·hr ·°F (W/m^2 K)	ψ_{floor} Btu/ft^2 ·hr ·°F (W/m^2 K)
R-23.6 (4.15)	0.042 (0.24)	0.018 (0.030)
R-28.2 (4.97)	0.035 (0.20)	0.012 (0.020)
R-33.6 (5.91)	0.030 (0.17)	0.001 (0.002)

Window Transition Transmittance

Exterior Insulation 1D R-Value (RSI)	R_t ft^2·hr·°F / Btu (m^2 K / W)	U_t Btu/ft^2 ·hr ·°F (W/m^2 K)	ψ_{Head} Btu/ft ·hr ·°F (W/m K)	ψ_{Sill} Btu/ft ·hr ·°F (W/m K)	ψ_{Jamb} Btu/ft ·hr ·°F (W/m K)	ψ_{Total} Btu/ft ·hr ·°F (W/m K)
R-5 (0.88)	R-13.0 (2.29)	0.077 (0.44)	0.023 (0.040)	0.014 (0.025)	0.018 (0.032)	0.018 (0.031)
R-10 (1.76)	R-14.0 (2.46)	0.071 (0.41)	0.023 (0.040)	0.014 (0.025)	0.019 (0.032)	0.018 (0.031)
R-15 (2.64)	R-14.7 (2.59)	0.068 (0.39)	0.031 (0.054)	0.015 (0.026)	0.020 (0.034)	0.022 (0.038)

Temperature Indices

	R5	R10	R15	
T_{i1}	0.62	0.63	0.64	Min T on window frame, at bottom corner
T_{i2}	0.33	0.43	0.49	Max T on interior surface of sheathing, below window adjacent to wood studs
T_{i3}	0.25	0.35	0.41	Min T on interior surface of sheathing, adjacent to wood stud

Detail 8.3.6

Exterior Insulated 2x6 Wood Stud (16" o.c.) Wall Assembly with Wood Strapping (16" o.c.) and Continuous Insulation Supporting Rainscreen Fiber Cement Board – Triple Glazed High Performance Vinyl Window Intersection (Insulated Frames)

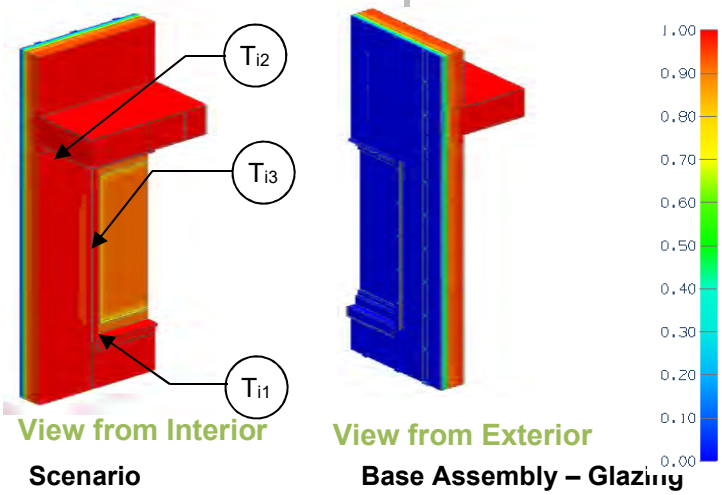

View from Interior

View from Exterior

Thermal Performance Indicators

Assembly 1D (Nominal) R-Value	R_{1D}	R-3.5 (0.61 RSI) + exterior insulation
Transmittance / Resistance without Anomaly	U_w, R_w U_g,	"clear wall" U- and R-value: w = wall without floor g = glazing
Transmittance / Resistance	U_t, R_t	U and R-values for: t = combined wall + floor + window
Surface Temperature Index[1]	T_i	0 = exterior temperature 1 = interior temperature
Linear Transmittance	ψ	Incremental increase in transmittance per linear length

[1]Assumptions and limitations for surface temperatures identified in ASHRAE 1365-RP

Scenario

Scenario	Insulation Brought into Opening
A	No
B	Yes

Base Assembly – Glazing

$U_{centre\ of\ glass}$ Btu/ft^2 ·hr ·°F (W/m^2 K)	U_g Btu/ft^2 ·hr ·°F (W/m^2 K)
0.142 (0.81)	0.182 (1.03)

Nominal (1D) vs. Assembly Performance Indicators

Base Assembly – Wood Stud Clear Wall

Exterior Insulation 1D R-Value (RSI)	R_{1D} ft^2·hr·°F / Btu (m^2 K / W)	R_w ft^2·hr·°F / Btu (m^2 K / W)	U_w Btu/ft^2 ·hr ·°F (W/m^2 K)
R-5 (0.88)	R-8.2 (1.44)	R-8.5 (1.50)	0.117 (0.67)
R-10 (1.76)	R-13.2 (2.32)	R-13.0 (2.28)	0.077 (0.44)
R-15 (2.64)	R-18.2 (3.20)	R-17.1 (3.01)	0.058 (0.33)

Intermediate Floor Linear Transmittance

R_{floor} ft^2·hr·°F / Btu (m^2 K / W)	U_{floor} Btu/ft^2 ·hr ·°F (W/m^2 K)	ψ_{floor} Btu/ft^2 ·hr ·°F (W/m^2 K)
R-8.7 (1.53)	0.115 (0.65)	-0.025 (-0.044)
R-13.2 (2.33)	0.076 (0.43)	-0.016 (-0.027)
R-18.2 (3.20)	0.055 (0.31)	-0.008 (-0.014)

Window Transition Transmittance

	Exterior Insulation 1D R-Value (RSI)	R_t ft^2·hr·°F / Btu (m^2 K / W)	U_t Btu/ft^2 ·hr ·°F (W/m^2 K)	ψ_{Head} Btu/ft ·hr ·°F (W/m K)	ψ_{Sill} Btu/ft ·hr ·°F (W/m K)	ψ_{Jamb} Btu/ft ·hr ·°F (W/m K)	ψ_{Total} Btu/ft ·hr ·°F (W/m K)
A	R-5 (0.88)	R-7.9 (1.39)	0.127 (0.72)	-0.017 (-0.029)	0.006(0.011)	0.007 (0.012)	-0.016 (-0.027)
	R-10 (1.76)	R-9.9 (1.75)	0.101 (0.57)	0.006 (0.011)	0.016 (0.027)	0.016 (0.028)	-0.001 (-0.002)
	R-15 (2.64)	R-11.0 (1.94)	0.091 (0.52)	0.021 (0.036)	0.027 (0.046)	0.027 (0.047)	0.014 (0.024)
B	R-5 (0.88)	R-7.9 (1.39)	0.126 (0.72)	-0.047 (-0.081)	0.001 (0.001)	0.003 (0.005)	-0.019 (-0.033)
	R-10 (1.76)	R-10.0 (1.76)	0.100 (0.57)	-0.040 (-0.070)	0.010 (0.017)	0.012 (0.020)	-0.005 (-0.008)
	R-15 (2.64)	R-11.1 (1.96)	0.090 (0.51)	0.008 (0.013)	0.021 (0.036)	0.023 (0.039)	0.010 (0.017)

Temperature Indices

	R5	R10	R15	
T_{i1}	0.69	0.69	0.69	Min T on window frame, at bottom corner at edge of glazing
T_{i2}	0.33	0.45	0.53	Max T on interior surface of sheathing, below floor adjacent to wood stud
T_{i3}	0.25	0.30	0.33	Min T on interior surface of sheathing at centre of wall between wood stud

Detail 8.3.7

Exterior and Interior Insulated 2x6 Wood Stud (16" o.c.) Wall Assembly with Wood Strapping (16" o.c.) and Continuous Insulation Supporting Rainscreen Fiber Cement Board – Triple Glazed High Performance Vinyl Window Intersection (Insulated Frames)

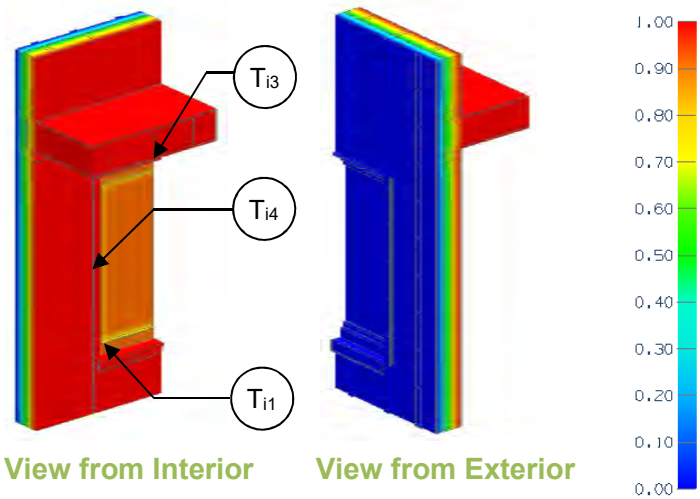

View from Interior View from Exterior

Thermal Performance Indicators

Assembly 1D (Nominal) R-Value	R_{1D}	R-21.6 (3.80 RSI) + exterior insulation
Transmittance / Resistance without Anomaly	U_w, R_w U_g,	"clear wall" U- and R-value: w = wall without floor g = glazing
Transmittance / Resistance	U_t, R_t	U and R-values for: t = combined wall + floor + window
Surface Temperature Index[1]	T_i	0 = exterior temperature 1 = interior temperature
Linear Transmittance	ψ	Incremental increase in transmittance per linear length

[1]Assumptions and limitations for surface temperatures identified in ASHRAE 1365-RP

Scenario

Scenario	Insulation Brought into Opening
A	No
B	Yes

Base Assembly – Glazing

$U_{centre\ of\ glass}$ Btu/ft² ·hr ·ºF (W/m² K)	U_g Btu/ft² ·hr ·ºF (W/m² K)
0.142 (0.81)	0.182 (1.03)

Nominal (1D) vs. Assembly Performance Indicators

Base Assembly – Wood Stud Clear Wall

Exterior Insulation 1D R-Value (RSI)	R_{1D} ft²·hr·ºF / Btu (m² K / W)	R_w ft²·hr·ºF / Btu (m² K / W)	U_w Btu/ft² ·hr ·ºF (W/m² K)
R-5 (0.88)	R-26.6 (4.68)	R-24.6 (4.33)	0.041 (0.23)
R-10 (1.76)	R-31.6 (5.57)	R-29.2 (5.14)	0.034 (0.19)
R-15 (2.64)	R-36.6 (6.45)	R-33.7 (5.93)	0.030 (0.17)

Intermediate Floor Linear Transmittance

R_{floor} ft²·hr·ºF / Btu (m² K / W)	U_{floor} Btu/ft² ·hr ·ºF (W/m² K)	ψ_{floor} Btu/ft² ·hr ·ºF (W/m² K)
R-23.6 (4.15)	0.042 (0.24)	0.018 (0.030)
R-28.2 (4.97)	0.035 (0.20)	0.012 (0.020)
R-33.6 (5.91)	0.030 (0.17)	0.001 (0.002)

Window Transition Transmittance

	Exterior Insulation 1D R-Value (RSI)	R_t ft²·hr·ºF / Btu (m² K / W)	U_t Btu/ft² ·hr ·ºF (W/m² K)	ψ_{Head} Btu/ft ·hr ·ºF (W/m K)	ψ_{Sill} Btu/ft ·hr ·ºF (W/m K)	ψ_{Jamb} Btu/ft ·hr ·ºF (W/m K)	ψ_{Total} Btu/ft ·hr ·ºF (W/m K)
A	R-5 (0.88)	R-12.5 (2.20)	0.080 (0.45)	0.034 (0.059)	0.019 (0.032)	0.018 (0.032)	0.015 (0.026)
	R-10 (1.76)	R-13.4 (2.37)	0.074 (0.42)	0.028 (0.049)	0.020 (0.035)	0.019 (0.033)	0.014 (0.025)
	R-15 (2.64)	R-14.2 (2.51)	0.070 (0.40)	0.026 (0.044)	0.021 (0.036)	0.018 (0.032)	0.016 (0.028)
B	R-5 (0.88)	R-12.6 (2.22)	0.079 (0.45)	0.032 (0.056)	0.019 (0.033)	0.017 (0.029)	0.012 (0.021)
	R-10 (1.76)	R-13.6 (2.39)	0.074 (0.42)	0.026 (0.045)	0.015 (0.026)	0.016 (0.028)	0.011 (0.019)
	R-15 (2.64)	R-14.4 (2.53)	0.070 (0.40)	0.023 (0.041)	0.015 (0.026)	0.017 (0.029)	0.013 (0.022)

Temperature Indices

	R5	R10	R15	
T_{i1}	0.69	0.69	0.69	Min T on window frame, at bottom corner at edge of glazing
T_{i2}	0.75	0.84	0.88	Max T on interior surface of sheathing, at centre of wall away from wood studs
T_{i3}	0.63	0.71	0.77	Min T on interior surface of sheathing, below window sill adjacent to wood stud

Detail 8.3.8

Interior Insulated Cross Laminated Timber (CLT) Spandrel at Window and Dowel Laminated Timber (DLT) – Intermediate Floor Intersection with Edge of Floor and Glulam Beam Aligned

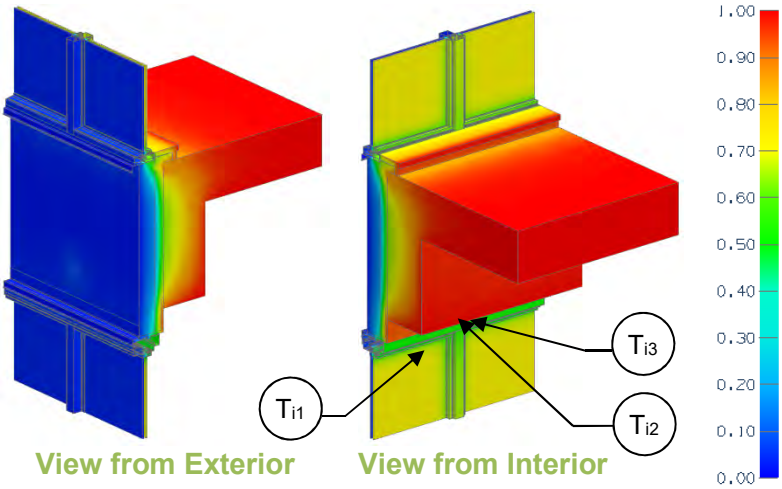

Thermal Performance Indicators

Assembly 1D (Nominal) R-Value at Beam	R_{1D}	R-15.4 (2.71 RSI) + insulation
Transmittance without Anomaly	$U_{g\ top}$ $U_{g\ bottom}$ U_g	U-value for aluminum window including framing g top = sill g bottom = head g = combined sill + head
Transmittance / Resistance	U_o, R_o U_s, R_s U_t, R_t	U and R-values for o = spandrel with floor without glazing s = spandrel including window to wall interface t = combined glazing + spandrel
Linear Transmittance	ψ	Incremental increase in transmittance per linear length of window to wall interface

Assembly Performance Indicators

Base Assembly – Aluminum Window

Mullion Spacing	$U_{centre\ of\ glass}$ Btu/ft^2 ·hr ·ºF (W/m^2 K)	$U_{g\ top}$ Btu/ft^2 ·hr ·ºF (W/m^2 K)	$U_{g\ bottom}$ Btu/ft^2 ·hr ·ºF (W/m^2 K)	U_g Btu/ft^2 ·hr ·ºF (W/m^2 K)
24” o.c.	0.321 (1.82)	0.428 (2.43)	0.524 (2.97)	0.478 (2.71)
36” o.c.	0.321 (1.82)	0.407 (2.31)	0.462 (2.63)	0.436 (2.47)

Window to Wall Linear Transmittance

ISO-CONNECT Spacing	Spandrel Insulation 1D R-Value (RSI)	R_{1D} ft^2·hr·ºF / Btu (m^2 K / W)	R_o ft^2·hr·ºF / Btu (m^2 K / W)	U_o Btu/ft^2 ·hr ·ºF (W/m^2 K)	R_s ft^2·hr·ºF / Btu (m^2 K / W)	U_s Btu/ft^2 ·hr ·ºF (W/m^2 K)	R_t ft^2·hr·ºF / Btu (m^2 K / W)	U_t Btu/ft^2 ·hr ·ºF (W/m^2 K)	Ψ Btu/ft ·hr·ºF (W/m K)
24” o.c.	R-8.4 (1.48)	R-23.8 (4.18)	R-12.6 (2.22)	0.079 (0.45)	R-11.1 (1.95)	0.090 (0.51)	R-3.8 (0.68)	0.261 (1.48)	0.015 (0.026)
	R-16.8 (2.96)	R-32.2 (5.66)	R-15.0 (2.64)	0.067 (0.38)	R-12.7 (2.25)	0.078 (0.45)	R-3.9 (0.69)	0.254 (1.44)	0.015 (0.027)
	R-25.2 (4.44)	R-40.6 (7.14)	R-16.4 (2.89)	0.061 (0.35)	R-13.8 (2.43)	0.073 (0.41)	R-4.0 (0.70)	0.251 (1.42)	0.016 (0.027)
36” o.c.	R-8.4 (1.48)	R-23.8 (4.18)	R-13.0 (2.29)	0.077 (0.44)	R-12.3 (2.16)	0.081 (0.46)	R-3.7 (0.65)	0.271 (1.54)	0.006 (0.010)
	R-16.8 (2.96)	R-32.2 (5.66)	R-15.6 (2.76)	0.064 (0.36)	R-14.6 (2.58)	0.068 (0.39)	R-3.8 (0.67)	0.264 (1.50)	0.006 (0.010)
	R-25.2 (4.44)	R-40.6 (7.14)	R-17.3 (3.05)	0.058 (0.33)	R-16.0 (2.82)	0.062 (0.35)	R-3.8 (0.67)	0.262 (1.49)	0.006 (0.010)
	R-33.6 (5.92)	R-49.0 (8.62)	R-18.5 (3.25)	0.054 (0.31)	R-17.0 (3.00)	0.059 (0.33)	R-3.8 (0.68)	0.260 (1.48)	0.006 (0.010)

Temperature Indices

	24” o.c.			36” o.c.				
	R8.4	R16.8	R25.2	R8.4	R16.8	R25.2	R33.6	
Ti_1	0.51	0.51	0.51	0.51	0.51	0.51	0.51	Min T on window glass, at top corner of window head
Ti_2	0.52	0.52	0.52	0.53	0.53	0.53	0.53	Min T on window frame, on vertical mullion at deflection header
Ti_3	0.90	0.93	0.94	0.89	0.93	0.94	0.95	Min T on beam, at plywood closure, along connector

Detail 8.3.9

Full Height Interior Insulated Cross Laminated Timber (CLT) Spandrel at Window and Dowel Laminated Timber (DLT) – Intermediate Floor Intersection with Edge of Floor and Glulam Beam Aligned

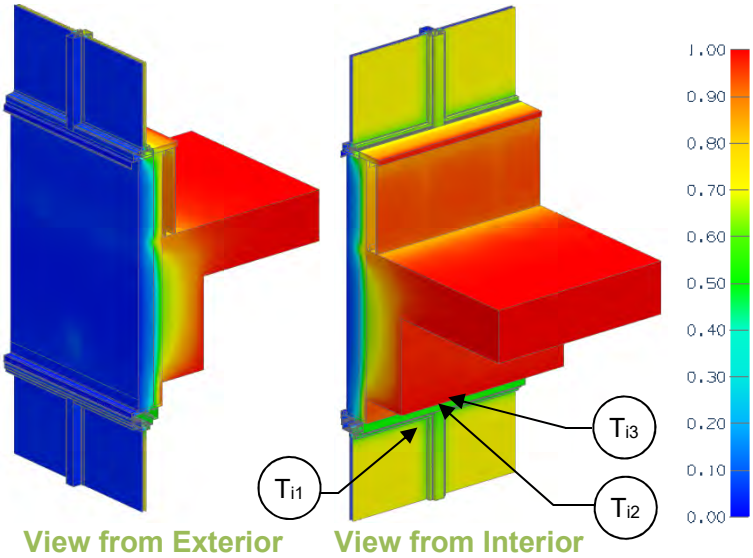

Thermal Performance Indicators

Assembly 1D (Nominal) R-Value at Beam	R_{1D}	R-15.4 (2.71 RSI) + insulation
Transmittance without Anomaly	$U_{g\ top}$ $U_{g\ bottom}$ U_g	U-value for aluminum window including framing g top = sill g bottom = head g = combined sill + head
Transmittance / Resistance	U_o, R_o U_s, R_s U_t, R_t	U and R-values for o = spandrel with floor without glazing s = spandrel including window to wall interface t = combined glazing + spandrel
Linear Transmittance	ψ	Incremental increase in transmittance per linear length of window to wall interface

Assembly Performance Indicators

Base Assembly – Aluminum Window

Mullion Spacing	$U_{centre\ of\ glass}$ Btu/ft^2 ·hr ·ºF (W/m^2 K)	$U_{g\ top}$ Btu/ft^2 ·hr ·ºF (W/m^2 K)	$U_{g\ bottom}$ Btu/ft^2 ·hr ·ºF (W/m^2 K)	U_g Btu/ft^2 ·hr ·ºF (W/m^2 K)
36” o.c.	0.321 (1.82)	0.407 (2.31)	0.462 (2.63)	0.436 (2.47)

Window to Wall Linear Transmittance

ISO-CONNECT Spacing	Spandrel Insulation 1D R-Value (RSI)	R_{1D} ft^2·hr·ºF / Btu (m^2 K / W)	R_o ft^2·hr·ºF / Btu (m^2 K / W)	U_o Btu/ft^2 ·hr ·ºF (W/m^2 K)	R_s ft^2·hr·ºF / Btu (m^2 K / W)	U_s Btu/ft^2 ·hr ·ºF (W/m^2 K)	R_t ft^2·hr·ºF / Btu (m^2 K / W)	U_t Btu/ft^2 ·hr ·ºF (W/m^2 K)	Ψ Btu/ft ·hr·ºF (W/m K)
36” o.c.	R-8.4 (1.48)	R-23.8 (4.18)	R-13.1 (2.31)	0.076 (0.43)	R-8.5 (1.50)	0.117 (0.67)	R-3.5 (0.61)	0.287 (1.63)	0.008 (0.014)
	R-16.8 (2.96)	R-32.2 (5.66)	R-16.6 (2.93)	0.060 (0.34)	R-10.8 (1.90)	0.093 (0.53)	R-3.6 (0.64)	0.276 (1.57)	0.007 (0.011)
	R-25.2 (4.44)	R-40.6 (7.14)	R-19.2 (3.38)	0.052 (0.30)	R-12.4 (2.19)	0.080 (0.46)	R-3.7 (0.65)	0.270 (1.53)	0.006 (0.010)
	R-33.6 (5.92)	R-49.0 (8.62)	R-21.2 (3.74)	0.047 (0.27)	R-13.7 (2.41)	0.073 (0.42)	R-3.7 (0.66)	0.267 (1.51)	0.006 (0.010)

Temperature Indices

	R-8.4	R-16.8	R-25.2	R-33.6	
Ti_1	0.52	0.52	0.52	0.52	Min T on window glass, at top corner of window head
Ti_2	0.53	0.53	0.53	0.53	Min T on window frame, on vertical mullion at deflection header
Ti_3	0.89	0.92	0.94	0.95	Min T on beam, at plywood closure, along connector

Detail 8.3.10

Interior Insulated Cross Laminated Timber (CLT) Spandrel at Window and Dowel Laminated Timber (DLT) – Intermediate Floor Intersection with Edge of Floor and Glulam Beam Not Aligned

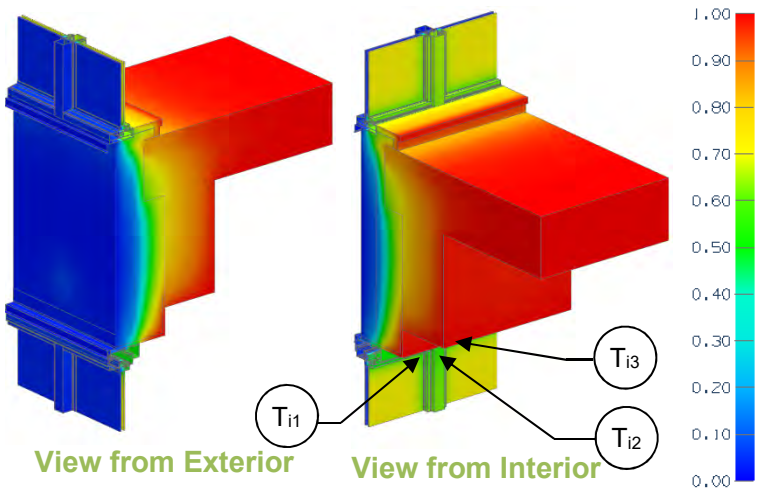

Thermal Performance Indicators

Assembly 1D (Nominal) R-Value at Beam	R_{1D}	R-40.6 (7.15 RSI)
Transmittance without Anomaly	$U_{g\ top}$ $U_{g\ bottom}$ U_g	U-value for aluminum window including framing g top = sill g bottom = head g = combined sill + head
Transmittance / Resistance	U_o, R_o U_s, R_s U_t, R_t	U and R-values for o = spandrel with floor without glazing s = spandrel including window to wall interface t = combined glazing + spandrel
Linear Transmittance	ψ	Incremental increase in transmittance per linear length of window to wall interface

Assembly Performance Indicators

Base Assembly – Aluminum Window

Mullion Spacing	$U_{centre\ of\ glass}$ Btu/ft^2 ·hr ·°F (W/m^2 K)	$U_{g\ top}$ Btu/ft^2 ·hr ·°F (W/m^2 K)	$U_{g\ bottom}$ Btu/ft^2 ·hr ·°F (W/m^2 K)	U_g Btu/ft^2 ·hr ·°F (W/m^2 K)
24" o.c.	0.321 (1.82)	0.428 (2.43)	0.524 (2.97)	0.478 (2.71)

Window to Wall Linear Transmittance

ISO-CONNECT Spacing	Floor Insulation 1D R-Value (RSI)	R_{1D} ft^2·hr·°F / Btu (m^2 K / W)	R_o ft^2·hr·°F / Btu (m^2 K / W)	U_o Btu/ft^2 ·hr ·°F (W/m^2 K)	R_s ft^2·hr·°F / Btu (m^2 K / W)	U_s Btu/ft^2 ·hr ·°F (W/m^2 K)	R_t ft^2·hr·°F / Btu (m^2 K / W)	U_t Btu/ft^2 ·hr ·°F (W/m^2 K)	Ψ Btu/ft ·hr·°F (W/m K)
24" o.c.	R-8.4 (1.48)	R-40.6 (7.15)	R-15.3 (2.69)	0.066 (0.37)	R-13.0 (2.30)	0.077 (0.44)	R-4.0 (0.70)	0.253 (1.44)	0.015 (0.026)
	R-12.6 (2.22)	R-40.6 (7.15)	R-15.8 (2.78)	0.063 (0.36)	R-13.5 (2.37)	0.074 (0.42)	R-4.0 (0.70)	0.252 (1.43)	0.015 (0.025)
	R-16.8 (2.96)	R-40.6 (7.15)	R-16.2 (2.85)	0.062 (0.35)	R-13.8 (2.44)	0.072 (0.41)	R-4.0 (0.70)	0.250 (1.42)	0.014 (0.024)

Temperature Indices

	R-8.4	R-16.8	R-33.6	
Ti_1	0.51	0.51	0.51	Min T on window glass, at top corner of window head
Ti_2	0.52	0.52	0.52	Min T on window frame, on vertical mullion at deflection header
Ti_3	0.93	0.93	0.93	Min T on beam, at plywood closure, along connector

Detail 8.3.11

Double Framed Wall with 2x6 and 2x4 Wood Studs (16" o.c.) and 2" Gap – Triple Glazed Flanged Fiberglass Window Intersection with Wood Blocking and Un-insulated Perimeter

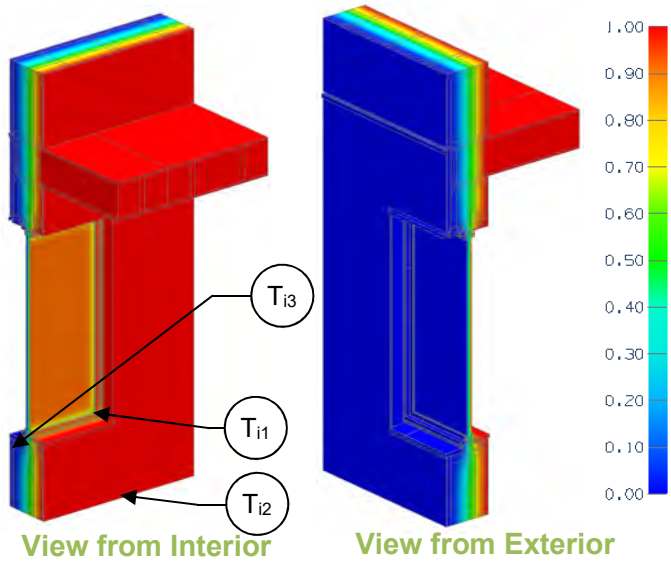

Thermal Performance Indicators

Assembly 1D (Nominal) R-Value	R_{1D}	R-2.5 (0.44 RSI) + insulation
Transmittance / Resistance without Anomaly	U_w, R_w, U_g,	"clear wall" U- and R-value: w = wall without intermediate floor g = glazing
Transmittance / Resistance	U_{floor}, R_{floor}, U_t, R_t	U and R-values for: floor = wall + intermediate floor t = combined wall + floor + window
Surface Temperature Index[1]	T_i	0 = exterior temperature 1 = interior temperature
Linear Transmittance	ψ	Incremental increase in transmittance per linear length

[1]Assumptions and limitations for surface temperatures identified in ASHRAE 1365-RP

Base Assembly – Glazing

$U_{centre\ of\ glass}$ Btu/ft^2 ·hr ·°F (W/m^2 K)	U_g Btu/ft^2 ·hr ·°F (W/m^2 K)
0.156 (0.888)	0.180 (1.020)

Nominal (1D) vs. Assembly Performance Indicators

Base Assembly – Wood Stud Clear Wall

Fill Insulation 1D R-Value (RSI)	R_{1D} ft^2·hr·°F / Btu (m^2 K / W)	R_w ft^2·hr·°F / Btu (m^2 K / W)	U_w Btu/ft^2 ·hr ·°F (W/m^2 K)
R-38.5 (6.78)	R-41.0 (7.23)	R-38.0 (6.70)	0.026 (0.15)
R-44.0 (7.75)	R-46.5 (8.19)	R-42.4 (7.47)	0.024 (0.13)
R-55.0 (9.69)	R-57.5 (10.13)	R-50.8 (8.94)	0.020 (0.11)
R-66.0 (11.62)	R-68.5 (12.07)	R-58.9 (10.37)	0.017 (0.10)

Intermediate Floor Linear Transmittance

R_{floor} ft^2·hr·°F / Btu (m^2 K / W)	U_{floor} Btu/ft^2 ·hr ·°F (W/m^2 K)	ψ_{floor} Btu/ft^2 ·hr ·°F (W/m^2 K)
R-36.4 (6.42)	0.027 (0.16)	0.010 (0.018)
R-40.1 (7.07)	0.025 (0.14)	0.012 (0.020)
R-47.2 (8.31)	0.021 (0.12)	0.013 (0.023)
R-53.7 (9.46)	0.019 (0.11)	0.014 (0.025)

Window Transition Transmittance

Fill Insulation 1D R-Value (RSI)	R_t ft^2·hr·°F / Btu (m^2 K / W)	U_t Btu/ft^2 ·hr ·°F (W/m^2 K)	ψ_{Head} Btu/ft ·hr ·°F (W/m K)	ψ_{Sill} Btu/ft ·hr ·°F (W/m K)	ψ_{Jamb} Btu/ft ·hr ·°F (W/m K)	ψ_{Total} Btu/ft ·hr ·°F (W/m K)
R-38.5 (6.78)	R-13.7 (2.41)	0.073 (0.42)	0.033 (0.057)	0.048 (0.083)	0.037 (0.064)	0.041 (0.072)
R-44.0 (7.75)	R-14.0 (2.46)	0.072 (0.41)	0.033 (0.057)	0.049 (0.084)	0.038 (0.066)	0.042 (0.073)
R-55.0 (9.69)	R-14.5 (2.55)	0.069 (0.39)	0.034 (0.059)	0.050 (0.086)	0.039 (0.068)	0.044 (0.075)
R-66.0 (11.62)	R-14.9 (2.62)	0.067 (0.38)	0.034 (0.060)	0.050 (0.087)	0.040 (0.069)	0.044 (0.077)

Temperature Indices

	R38.5	R44.0	R55.0	R66.0	
T_{i1}	0.66	0.66	0.66	0.66	Min T on window frame, at bottom corner
T_{i2}	0.07	0.07	0.07	0.06	Max T on interior surface of sheathing at studs
T_{i3}	0.01	0.01	0.01	0.01	Min T on interior surface sheathing below window sill between wood stud

Detail 8.3.12

Double Framed Wall with 2x6 and 2x4 Wood Studs (16" o.c.) and 3" Gap – Triple Glazed Flanged Fiberglass Window Intersection with Wood Blocking and Un-insulated Perimeter

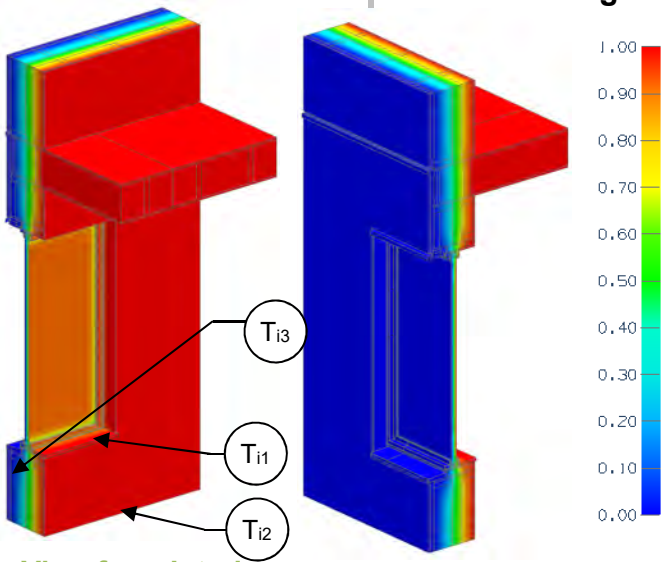

View from Interior

View from Exterior

Thermal Performance Indicators

Assembly 1D (Nominal) R-Value	R_{1D}	R-2.5 (0.44 RSI) + insulation
Transmittance / Resistance without Anomaly	U_w, R_w, U_g,	"clear wall" U- and R-value: w = wall without intermediate floor g = glazing
Transmittance / Resistance	U_{floor}, R_{floor}, U_t, R_t	U and R-values for: floor = wall + intermediate floor t = combined wall + floor + window
Surface Temperature Index[1]	T_i	0 = exterior temperature 1 = interior temperature
Linear Transmittance	ψ	Incremental increase in transmittance per linear length

[1]Assumptions and limitations for surface temperatures identified in ASHRAE 1365-RP

Base Assembly – Glazing

$U_{centre\ of\ glass}$ Btu/ft^2 ·hr ·°F (W/m^2 K)	U_g Btu/ft^2 ·hr ·°F (W/m^2 K)
0.156 (0.888)	0.180 (1.020)

Nominal (1D) vs. Assembly Performance Indicators

Base Assembly – Steel Stud Clear Wall

Fill Insulation 1D R-Value (RSI)	R_{1D} ft^2·hr·°F / Btu (m^2 K / W)	R_w ft^2·hr·°F / Btu (m^2 K / W)	U_w Btu/ft^2 ·hr ·°F (W/m^2 K)
R-42.0 (7.40)	R-44.5 (7.84)	R-41.6 (7.32)	0.024 (0.14)
R-48.0 (8.45)	R-50.5 (8.90)	R-46.4 (8.18)	0.022 (0.12)
R-60.0 (10.57)	R-62.5 (11.01)	R-55.9 (9.84)	0.018 (0.10)
R-72.0 (12.68)	R-74.5 (13.13)	R-65.0 (11.45)	0.015 (0.09)

Intermediate Floor Linear Transmittance

R_{floor} ft^2·hr·°F / Btu (m^2 K / W)	U_{floor} Btu/ft^2 ·hr ·°F (W/m^2 K)	ψ_{floor} Btu/ft^2 ·hr ·°F (W/m^2 K)
R-39.9 (7.02)	0.025 (0.14)	0.009 (0.016)
R-44.1 (7.76)	0.023 (0.13)	0.010 (0.017)
R-52.1 (9.17)	0.019 (0.11)	0.011 (0.020)
R-59.6 (10.49)	0.017 (0.10)	0.012 (0.021)

Window Transition Transmittance

Fill Insulation 1D R-Value (RSI)	R_t ft^2·hr·°F / Btu (m^2 K / W)	U_t Btu/ft^2 ·hr ·°F (W/m^2 K)	ψ_{Head} Btu/ft ·hr ·°F (W/m K)	ψ_{Sill} Btu/ft ·hr ·°F (W/m K)	ψ_{Jamb} Btu/ft ·hr ·°F (W/m K)	ψ_{Total} Btu/ft ·hr ·°F (W/m K)
R-42.0 (7.40)	R-13.9 (2.46)	0.072 (0.41)	0.035 (0.060)	0.049 (0.084)	0.039 (0.067)	0.043 (0.074)
R-48.0 (8.45)	R-14.3 (2.51)	0.070 (0.40)	0.035 (0.061)	0.049 (0.085)	0.039 (0.068)	0.044 (0.075)
R-60.0 (10.57)	R-14.8 (2.61)	0.068 (0.38)	0.036 (0.062)	0.050 (0.087)	0.040 (0.070)	0.044 (0.077)
R-72.0 (12.68)	R-15.2 (2.67)	0.066 (0.37)	0.036 (0.063)	0.041 (0.088)	0.041 (0.071)	0.045 (0.078)

Temperature Indices

	R42.0	R48.0	R60.0	R72.0	
T_{i1}	0.66	0.66	0.66	0.66	Min T on window frame, at bottom corner
T_{i2}	0.07	0.06	0.06	0.05	Max T on interior surface of sheathing at studs
T_{i3}	0.01	0.01	0.01	0.01	Min T on interior surface sheathing below window sill between wood stud

Detail 8.3.13

Double Framed Wall with 2x6 and 2x4 Wood Studs (16" o.c.) and 4" Gap – Triple Glazed Flanged Fiberglass Window Intersection with Wood Blocking and Un-insulated Perimeter

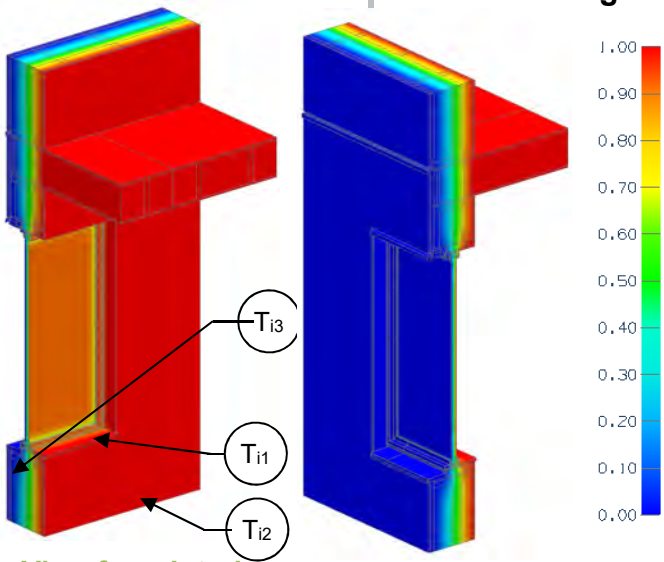

View from Interior

View from Exterior

Thermal Performance Indicators

Assembly 1D (Nominal) R-Value	R_{1D}	R-2.5 (0.44 RSI) + insulation
Transmittance / Resistance without Anomaly	U_w, R_w, U_g,	"clear wall" U- and R-value: w = wall without intermediate floor g = glazing
Transmittance / Resistance	U_{floor}, R_{floor}, U_t, R_t	U and R-values for: floor = wall + intermediate floor t = combined wall + floor + window
Surface Temperature Index[1]	T_i	0 = exterior temperature 1 = interior temperature
Linear Transmittance	ψ	Incremental increase in transmittance per linear length

[1]Assumptions and limitations for surface temperatures identified in ASHRAE 1365-RP

Base Assembly – Glazing

$U_{centre\ of\ glass}$ Btu/ft² ·hr ·°F (W/m² K)	U_g Btu/ft² ·hr ·°F (W/m² K)
0.156 (0.888)	0.180 (1.020)

Nominal (1D) vs. Assembly Performance Indicators

Base Assembly – Steel Stud Clear Wall

Fill Insulation 1D R-Value (RSI)	R_{1D} ft²·hr·°F / Btu (m² K / W)	R_w ft²·hr·°F / Btu (m² K / W)	U_w Btu/ft² ·hr ·°F (W/m² K)
R-45.5 (8.01)	R-48.0 (8.46)	R-45.1 (7.94)	0.022 (0.13)
R-52.0 (9.16)	R-54.5 (9.60)	R-50.5 (8.89)	0.020 (0.11)
R-65.0 (11.45)	R-67.5 (11.89)	R-60.9 (10.73)	0.016 (0.09)
R-78.0 (13.74)	R-80.5 (14.18)	R-71.1 (12.52)	0.014 (0.08)

Intermediate Floor Linear Transmittance

R_{floor} ft²·hr·°F / Btu (m² K / W)	U_{floor} Btu/ft² ·hr ·°F (W/m² K)	ψ_{floor} Btu/ft² ·hr ·°F (W/m² K)
R-43.3 (7.62)	0.023 (0.13)	0.008 (0.014)
R-48.0 (8.45)	0.021 (0.12)	0.009 (0.016)
R-56.9 (10.03)	0.018 (0.10)	0.010 (0.018)
R-65.3 (11.51)	0.015 (0.09)	0.011 (0.019)

Window Transition Transmittance

Fill Insulation 1D R-Value (RSI)	R_t ft²·hr·°F / Btu (m² K / W)	U_t Btu/ft² ·hr ·°F (W/m² K)	ψ_{Head} Btu/ft ·hr ·°F (W/m K)	ψ_{Sill} Btu/ft ·hr ·°F (W/m K)	ψ_{Jamb} Btu/ft ·hr ·°F (W/m K)	ψ_{Total} Btu/ft ·hr ·°F (W/m K)
R-45.5 (8.01)	R-14.2 (2.50)	0.070 (0.40)	0.037 (0.063)	0.049 (0.085)	0.040 (0.069)	0.044 (0.076)
R-52.0 (9.16)	R-14.5 (2.56)	0.069 (0.39)	0.037 (0.064)	0.050 (0.086)	0.040 (0.070)	0.044 (0.077)
R-65.0 (11.45)	R-15.0 (2.65)	0.066 (0.38)	0.038 (0.065)	0.050 (0.087)	0.041 (0.071)	0.045 (0.078)
R-78.0 (13.74)	R-15.4 (2.71)	0.065 (0.37)	0.038 (0.066)	0.051 (0.088)	0.041 (0.072)	0.046 (0.079)

Temperature Indices

	R45.5	R52.0	R65.0	R78.0	
T_{i1}	0.66	0.66	0.66	0.66	Min T on window frame, at bottom corner
T_{i2}	0.06	0.06	0.05	0.05	Max T on interior surface of sheathing at studs
T_{i3}	0.01	0.01	0.01	0.01	Min T on interior surface sheathing below window sill between wood stud

Detail 8.3.14

Double Framed Wall with 2x6 and 2x4 Wood Studs (16" o.c.) and 2" Gap – Triple Glazed Flanged Fiberglass Window Intersection with Wood Blocking and Insulated Perimeter

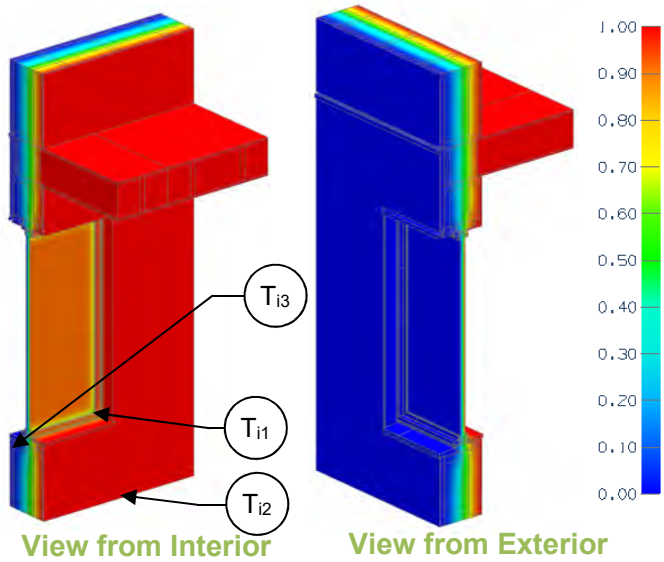

Thermal Performance Indicators

Assembly 1D (Nominal) R-Value	R_{1D}	R-2.5 (0.44 RSI) + insulation
Transmittance / Resistance without Anomaly	U_w, R_w, U_g,	"clear wall" U- and R-value: w = wall without intermediate floor g = glazing
Transmittance / Resistance	U_{floor}, R_{floor}, U_t, R_t	U and R-values for: floor = wall + intermediate floor t = combined wall + floor + window
Surface Temperature Index[1]	T_i	0 = exterior temperature 1 = interior temperature
Linear Transmittance	ψ	Incremental increase in transmittance per linear length

[1]Assumptions and limitations for surface temperatures identified in ASHRAE 1365-RP

Base Assembly – Glazing

$U_{centre\ of\ glass}$ Btu/ft^2 ·hr ·°F (W/m^2 K)	U_g Btu/ft^2 ·hr ·°F (W/m^2 K)
0.156 (0.888)	0.180 (1.020)

Nominal (1D) vs. Assembly Performance Indicators

Base Assembly – Wood Stud Clear Wall

Fill Insulation 1D R-Value (RSI)	R_{1D} ft^2·hr·°F / Btu (m^2 K / W)	R_w ft^2·hr·°F / Btu (m^2 K / W)	U_w Btu/ft^2 ·hr ·°F (W/m^2 K)
R-38.5 (6.78)	R-41.0 (7.23)	R-38.0 (6.70)	0.026 (0.15)
R-44.0 (7.75)	R-46.5 (8.19)	R-42.4 (7.47)	0.024 (0.13)
R-55.0 (9.69)	R-57.5 (10.13)	R-50.8 (8.94)	0.020 (0.11)
R-66.0 (11.62)	R-68.5 (12.07)	R-58.9 (10.37)	0.017 (0.10)

Intermediate Floor Linear Transmittance

R_{floor} ft^2·hr·°F / Btu (m^2 K / W)	U_{floor} Btu/ft^2 ·hr ·°F (W/m^2 K)	ψ_{floor} Btu/ft^2 ·hr ·°F (W/m^2 K)
R-36.4 (6.42)	0.027 (0.16)	0.010 (0.018)
R-40.1 (7.07)	0.025 (0.14)	0.012 (0.020)
R-47.2 (8.31)	0.021 (0.12)	0.013 (0.023)
R-53.7 (9.46)	0.019 (0.11)	0.014 (0.025)

Window Transition Transmittance

Fill Insulation 1D R-Value (RSI)	R_t ft^2·hr·°F / Btu (m^2 K / W)	U_t Btu/ft^2 ·hr ·°F (W/m^2 K)	ψ_{Head} Btu/ft ·hr ·°F (W/m K)	ψ_{Sill} Btu/ft ·hr ·°F (W/m K)	ψ_{Jamb} Btu/ft ·hr ·°F (W/m K)	ψ_{Total} Btu/ft ·hr ·°F (W/m K)
R-38.5 (6.78)	R-13.9 (2.45)	0.072 (0.41)	0.029 (0.049)	0.044 (0.077)	0.031 (0.054)	0.036 (0.062)
R-44.0 (7.75)	R-14.2 (2.51)	0.070 (0.40)	0.029 (0.050)	0.045 (0.078)	0.032 (0.055)	0.037 (0.064)
R-55.0 (9.69)	R-14.8 (2.60)	0.068 (0.38)	0.030 (0.051)	0.046 (0.080)	0.033 (0.058)	0.038 (0.066)
R-66.0 (11.62)	R-15.2 (2.67)	0.066 (0.37)	0.030 (0.052)	0.047 (0.082)	0.034 (0.059)	0.039 (0.067)

Temperature Indices

	R38.5	R44.0	R55.0	R66.0	
T_{i1}	0.66	0.66	0.66	0.66	Min T on window frame, at bottom corner
T_{i2}	0.07	0.07	0.07	0.07	Max T on interior surface of sheathing at studs
T_{i3}	0.02	0.02	0.02	0.02	Min T on interior surface sheathing below window sill between wood stud

Detail 8.3.15

Double Framed Wall with 2x6 and 2x4 Wood Studs (16" o.c.) and 3" Gap – Triple Glazed Flanged Fiberglass Window Intersection with Wood Blocking and Insulated Perimeter

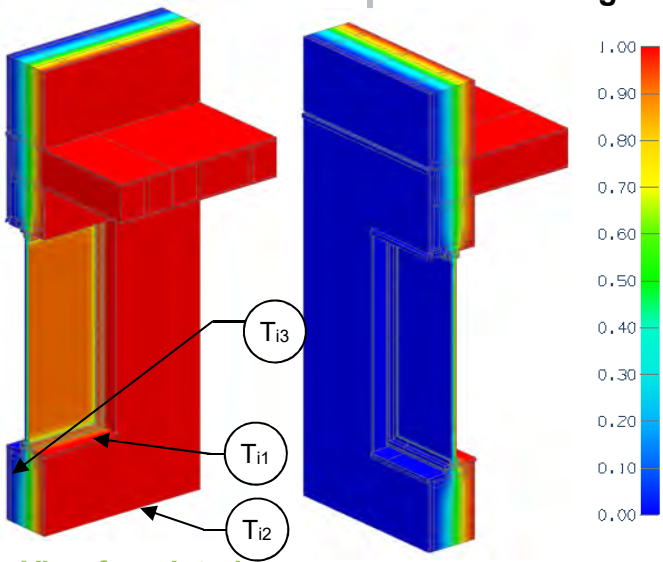

View from Interior

View from Exterior

Thermal Performance Indicators

Assembly 1D (Nominal) R-Value	R_{1D}	R-2.5 (0.44 RSI) + insulation
Transmittance / Resistance without Anomaly	U_w, R_w, U_g,	"clear wall" U- and R-value: w = wall without intermediate floor g = glazing
Transmittance / Resistance	U_{floor}, R_{floor}, U_t, R_t	U and R-values for: floor = wall + intermediate floor t = combined wall + floor + window
Surface Temperature Index[1]	T_i	0 = exterior temperature 1 = interior temperature
Linear Transmittance	ψ	Incremental increase in transmittance per linear length

[1]Assumptions and limitations for surface temperatures identified in ASHRAE 1365-RP

Base Assembly – Glazing

$U_{centre\ of\ glass}$ Btu/ft^2 ·hr ·°F (W/m^2 K)	U_g Btu/ft^2 ·hr ·°F (W/m^2 K)
0.156 (0.888)	0.180 (1.020)

Nominal (1D) vs. Assembly Performance Indicators

Base Assembly – Wood Stud Clear Wall

Fill Insulation 1D R-Value (RSI)	R_{1D} ft^2·hr·°F / Btu (m^2 K / W)	R_w ft^2·hr·°F / Btu (m^2 K / W)	U_w Btu/ft^2 ·hr ·°F (W/m^2 K)
R-42.0 (7.40)	R-44.5 (7.84)	R-41.6 (7.32)	0.024 (0.14)
R-48.0 (8.45)	R-50.5 (8.90)	R-46.4 (8.18)	0.022 (0.12)
R-60.0 (10.57)	R-62.5 (11.01)	R-55.9 (9.84)	0.018 (0.10)
R-72.0 (12.68)	R-74.5 (13.13)	R-65.0 (11.45)	0.015 (0.09)

Intermediate Floor Linear Transmittance

R_{floor} ft^2·hr·°F / Btu (m^2 K / W)	U_{floor} Btu/ft^2 ·hr ·°F (W/m^2 K)	ψ_{floor} Btu/ft^2 ·hr ·°F (W/m^2 K)
R-39.9 (7.02)	0.025 (0.14)	0.009 (0.016)
R-44.1 (7.76)	0.023 (0.13)	0.010 (0.017)
R-52.1 (9.17)	0.019 (0.11)	0.011 (0.020)
R-59.6 (10.49)	0.017 (0.10)	0.012 (0.021)

Window Transition Transmittance

Fill Insulation 1D R-Value (RSI)	R_t ft^2·hr·°F / Btu (m^2 K / W)	U_t Btu/ft^2 ·hr ·°F (W/m^2 K)	ψ_{Head} Btu/ft ·hr ·°F (W/m K)	ψ_{Sill} Btu/ft ·hr ·°F (W/m K)	ψ_{Jamb} Btu/ft ·hr ·°F (W/m K)	ψ_{Total} Btu/ft ·hr ·°F (W/m K)
R-42.0 (7.40)	R-14.3 (2.51)	0.070 (0.40)	0.029 (0.050)	0.044 (0.077)	0.031 (0.054)	0.036 (0.062)
R-48.0 (8.45)	R-14.6 (2.57)	0.069 (0.39)	0.029 (0.051)	0.045 (0.078)	0.032 (0.055)	0.037 (0.063)
R-60.0 (10.57)	R-15.1 (2.66)	0.066 (0.38)	0.030 (0.052)	0.046 (0.080)	0.033 (0.057)	0.038 (0.065)
R-72.0 (12.68)	R-15.5 (2.73)	0.064 (0.37)	0.030 (0.052)	0.047 (0.081)	0.034 (0.058)	0.038 (0.066)

Temperature Indices

	R42.0	R48.0	R60.0	R72.0	
T_{i1}	0.66	0.66	0.66	0.66	Min T on window frame, at bottom corner
T_{i2}	0.07	0.06	0.06	0.06	Max T on interior surface of sheathing at studs
T_{i3}	0.02	0.02	0.01	0.01	Min T on interior surface sheathing below window sill between wood stud

Detail 8.3.16

Double Framed Wall with 2x6 and 2x4 Wood Studs (16" o.c.) and 4" Gap – Triple Glazed Flanged Fiberglass Window Intersection with Wood Blocking and Insulated Perimeter

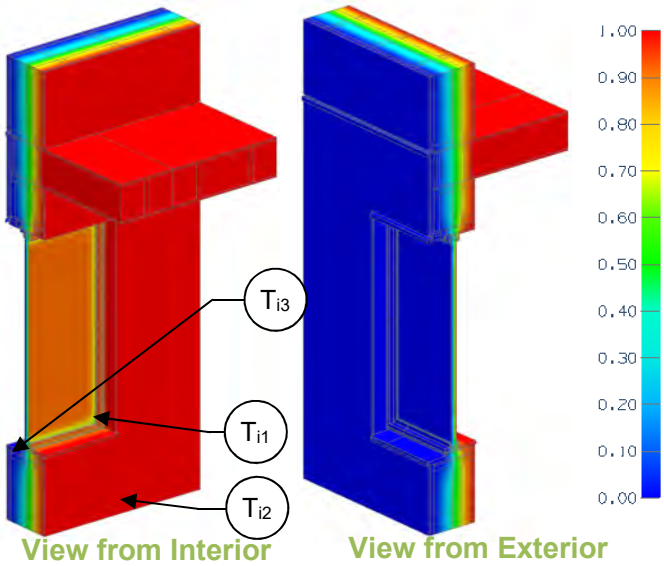

Thermal Performance Indicators

Assembly 1D (Nominal) R-Value	R_{1D}	R-2.5 (0.44 RSI) + insulation
Transmittance / Resistance without Anomaly	U_w, R_w, U_g,	"clear wall" U- and R-value: w = wall without intermediate floor g = glazing
Transmittance / Resistance	U_{floor}, R_{floor}, U_t, R_t	U and R-values for: floor = wall + intermediate floor t = combined wall + floor + window
Surface Temperature Index[1]	T_i	0 = exterior temperature 1 = interior temperature
Linear Transmittance	ψ	Incremental increase in transmittance per linear length

[1]Assumptions and limitations for surface temperatures identified in ASHRAE 1365-RP

Base Assembly – Glazing

$U_{centre\ of\ glass}$ Btu/ft^2 ·hr ·°F (W/m^2 K)	U_g Btu/ft^2 ·hr ·°F (W/m^2 K)
0.156 (0.888)	0.180 (1.020)

Nominal (1D) vs. Assembly Performance Indicators

Base Assembly – Wood Stud Clear Wall

Fill Insulation 1D R-Value (RSI)	R_{1D} ft^2·hr·°F / Btu (m^2 K / W)	R_w ft^2·hr·°F / Btu (m^2 K / W)	U_w Btu/ft^2 ·hr ·°F (W/m^2 K)
R-45.5 (8.01)	R-48.0 (8.46)	R-45.1 (7.94)	0.022 (0.13)
R-52.0 (9.16)	R-54.5 (9.60)	R-50.5 (8.89)	0.020 (0.11)
R-65.0 (11.45)	R-67.5 (11.89)	R-60.9 (10.73)	0.016 (0.09)
R-78.0 (13.74)	R-80.5 (14.18)	R-71.1 (12.52)	0.014 (0.08)

Intermediate Floor Linear Transmittance

R_{floor} ft^2·hr·°F / Btu (m^2 K / W)	U_{floor} Btu/ft^2 ·hr ·°F (W/m^2 K)	ψ_{floor} Btu/ft^2 ·hr ·°F (W/m^2 K)
R-43.3 (7.62)	0.023 (0.13)	0.008 (0.014)
R-48.0 (8.45)	0.021 (0.12)	0.009 (0.016)
R-56.9 (10.03)	0.018 (0.10)	0.010 (0.018)
R-65.3 (11.51)	0.015 (0.09)	0.011 (0.019)

Window Transition Transmittance

Fill Insulation 1D R-Value (RSI)	R_t ft^2·hr·°F / Btu (m^2 K / W)	U_t Btu/ft^2 ·hr ·°F (W/m^2 K)	ψ_{Head} Btu/ft ·hr ·°F (W/m K)	ψ_{Sill} Btu/ft ·hr ·°F (W/m K)	ψ_{Jamb} Btu/ft ·hr ·°F (W/m K)	ψ_{Total} Btu/ft ·hr ·°F (W/m K)
R-45.5 (8.01)	R-14.6 (2.56)	0.069 (0.39)	0.029 (0.050)	0.045 (0.078)	0.031 (0.054)	0.036 (0.062)
R-52.0 (9.16)	R-14.9 (2.62)	0.067 (0.38)	0.030 (0.051)	0.046 (0.079)	0.032 (0.055)	0.037 (0.063)
R-65.0 (11.45)	R-15.4 (2.72)	0.065 (0.37)	0.030 (0.053)	0.047 (0.081)	0.033 (0.057)	0.038 (0.065)
R-78.0 (13.74)	R-15.8 (2.78)	0.063 (0.36)	0.031 (0.053)	0.047 (0.082)	0.033 (0.058)	0.038 (0.066)

Temperature Indices

	R45.5	R52.0	R65.0	R78.0	
T_{i1}	0.66	0.66	0.66	0.66	Min T on window frame, at bottom corner
T_{i2}	0.06	0.06	0.06	0.05	Max T on interior surface of sheathing at studs
T_{i3}	0.01	0.01	0.01	0.01	Min T on interior surface sheathing below window sill between wood stud

Detail 8.4.1

Exterior and Interior Insulated 2x6 Wood Stud (16" o.c.) Wall Assembly with Wood Strapping and Continuous Insulation Supporting Rainscreen Fiber Cement Board – Vented Low-slope Roof & Parapet Intersection

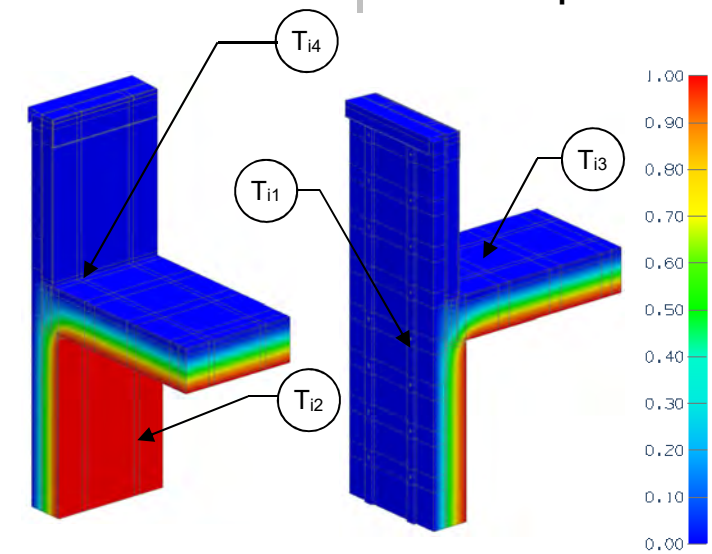

View from Interior View from Exterior

Thermal Performance Indicators

Assembly 1D (Nominal) R-Value	R_{1D}	R-21.6 (3.80 RSI) + exterior insulation
Transmittance / Resistance without Anomaly	U_r, R_r, U_w, R_w	"clear field" U- and R-value r = roof w = wood framed wall without parapet
Transmittance / Resistance	U, R	U and R-values for the overall assembly
Surface Temperature Index[1]	T_i	0 = exterior temperature 1 = interior temperature
Linear Transmittance	ψ	Incremental increase in transmittance per linear length of parapet

[1]Assumptions and limitations for surface temperatures identified in ASHRAE 1365-RP

Nominal (1D) vs. Assembly Performance Indicators

Base Assembly – Wall

Wall Exterior Insulation 1D R-Value (RSI)	R_{1D} ft²·hr·°F / Btu (m² K / W)	R_w ft²·hr·°F / Btu (m² K / W)	U_w Btu/ft² ·hr ·°F (W/m² K)
R-0 (0)	R-21.6 (3.80)	R-19.7 (3.47)	0.051 (0.29)
R-7.5 (1.32)	R-29.0 (5.12)	R-26.9 (4.74)	0.037 (0.21)
R-15 (2.64)	R-36.6 (6.44)	R-33.7 (5.93)	0.030 (0.17)

Base Assembly – Roof

Roof Insulation 1D R-Value (RSI)	R_r ft² hr °F / Btu (m² K / W)	U_r Btu/ft² ·hr ·°F (W/m² K)
R-30 (5.28)	R-30.1 (5.3)	0.033 (0.19)

Parapet Linear Transmittance

Wall Exterior Insulation 1D R-Value (RSI)	R ft²·hr·°F / Btu (m² K / W)	U Btu/ft² ·hr ·°F (W/m² K)	ψ Btu/ft ·hr·°F (W/m K)
R-0 (0)	R-22.1 (3.89)	0.045 (0.26)	0.031 (0.054)
R-7.5 (1.32)	R-25.9 (4.56)	0.039 (0.22)	0.032 (0.056)
R-15 (2.64)	R-29.3 (5.15)	0.034 (0.19)	0.026 (0.045)

Temperature Indices

	R0	R7.5	R15	
T_{i1}	-	0.26	0.33	Min T on sheathing, at studs and rim joist intersection
T_{i2}	-	0.35	0.50	Max T on sheathing, at studs between fasteners
T_{i3}	-	0.04	0.04	Min T on roof sheathing, between roof strapping
T_{i4}	0.02	-	-	Min T on roof sheathing, at top of rim joist intersection

Detail 8.4.2

Exterior and Interior Insulated 2x6 Wood Stud (16" o.c.) Wall Assembly with Wood Strapping and Continuous Insulation Supporting Fiber Cement Board – Sloped Wood Framed Roof & Wall Intersection with Insulation at Ceiling

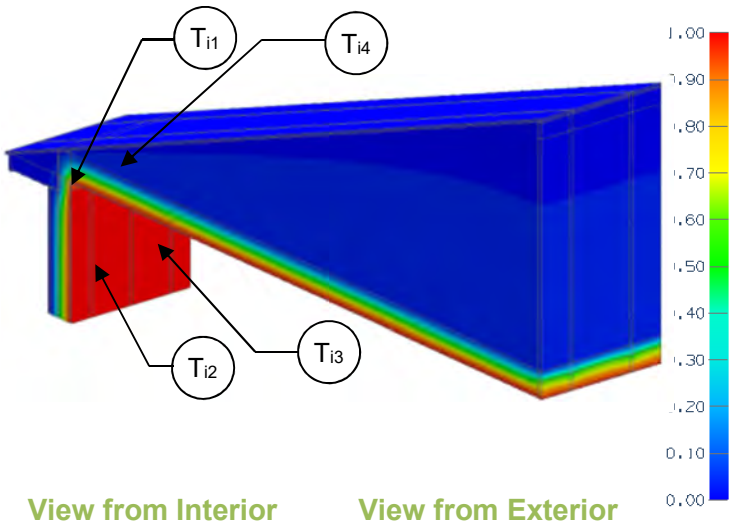

Thermal Performance Indicators

Assembly 1D (Nominal) R-Value	R_{1D}	R-21.6 (3.80 RSI) + exterior insulation
Transmittance / Resistance without Anomaly	U_r, R_r, U_w, R_w	"clear field" U- and R-value r = roof w = wood framed wall without soffit line
Transmittance / Resistance	U, R	U and R-values for the overall assembly
Surface Temperature Index[1]	T_i	0 = exterior temperature 1 = interior temperature
Linear Transmittance	ψ	Incremental increase in transmittance per linear length of soffit line

[1]Assumptions and limitations for surface temperatures identified in ASHRAE 1365-RP

Nominal (1D) vs. Assembly Performance Indicators

Base Assembly – Wall

Wall Exterior Insulation 1D R-Value (RSI)	R_{1D} ft²·hr·°F / Btu (m² K / W)	R_w ft²·hr·°F / Btu (m² K / W)	U_w Btu/ft² ·hr ·°F (W/m² K)
R-0 (0)	R-22.2 (3.91)	R-19.7 (3.47)	0.051 (0.29)
R-7.5 (1.32)	R-29.2 (5.14)	R-26.9 (4.74)	0.037 (0.21)
R-15 (2.64)	R-36.7 (6.46)	R-33.6 (5.93)	0.030 (0.17)

Base Assembly – Roof

Roof Insulation 1D R-Value (RSI)	R_r ft² hr °F / Btu (m² K / W)	U_r Btu/ft² ·hr ·°F (W/m² K)
R-30 (5.28)	R-30.1 (5.3)	0.033 (0.19)

Soffit Line Linear Transmittance

Wall Exterior Insulation 1D R-Value (RSI)	R ft²·hr·°F / Btu (m² K / W)	U Btu/ft² ·hr ·°F (W/m² K)	ψ Btu/ft ·hr·°F (W/m K)
R-0 (0.00)	R-27.0 (4.76)	0.037 (0.21)	0.019 (0.033)
R-7.5 (1.32)	R-28.5 (5.02)	0.035 (0.20)	0.028 (0.049)
R-15 (2.64)	R-29.3 (5.16)	0.034 (0.19)	0.035 (0.061)

Temperature Indices

	R0	R7.5	R15	
T_{i1}	-	0.11	0.13	Min T on sheathing, between studs at top plate
T_{i2}	-	0.38	0.51	Max T on sheathing, along studs between fasteners
T_{i3}	0.08	-	-	Min T on sheathing, between studs
T_{i4}	0.15	-	-	Max T on sheathing, at top plate and truss intersection

Detail 8.4.3

Exterior and Interior Insulated 2x6 Wood Stud (16" o.c.) Wall Assembly with Wood Strapping and Continuous Insulation Supporting Rainscreen Fiber Cement Board – Sloped Wood Framed Roof & Wall Intersection with Insulation at Roof Sheathing

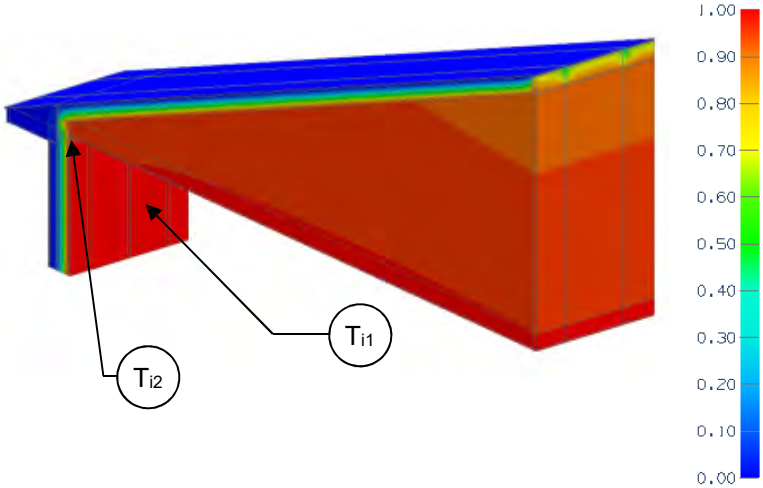

View from Interior View from Exterior

Thermal Performance Indicators

Assembly 1D (Nominal) R-Value	R_{1D}	R-21.6 (3.80 RSI) + exterior insulation
Transmittance / Resistance without Anomaly	U_r, R_r, U_w, R_w	"clear field" U- and R-value r = roof w = wood framed wall without soffit line
Transmittance / Resistance	U, R	U and R-values for the overall assembly
Surface Temperature Index[1]	T_i	0 = exterior temperature 1 = interior temperature
Linear Transmittance	ψ	Incremental increase in transmittance per linear length of soffit line

[1]Assumptions and limitations for surface temperatures identified in ASHRAE 1365-RP

Nominal (1D) vs. Assembly Performance Indicators

Base Assembly – Wall

Wall Exterior Insulation 1D R-Value (RSI)	R_{1D} ft²·hr·°F / Btu (m² K / W)	R_w ft²·hr·°F / Btu (m² K / W)	U_w Btu/ft² ·hr ·°F (W/m² K)
R-0 (0)	R-22.2 (3.91)	R-19.7 (3.47)	0.051 (0.29)
R-7.5 (1.32)	R-29.2 (5.14)	R-26.9 (4.74)	0.037 (0.21)
R-15 (2.64)	R-36.7 (6.46)	R-33.6 (5.93)	0.030 (0.17)

Base Assembly – Roof

Roof Insulation 1D R-Value (RSI)	R_r ft² hr °F / Btu (m² K / W)	U_r Btu/ft² ·hr ·°F (W/m² K)
R-30 (5.28)	R-24.5 (4.32)	0.041 (0.23)

Roof Linear Transmittance

Wall Exterior Insulation 1D R-Value (RSI)	R ft²·hr·°F / Btu (m² K / W)	U Btu/ft² ·hr ·°F (W/m² K)	ψ Btu/ft ·hr·°F (W/m K)
R-0 (0.00)	R-22.6 (3.99)	0.044 (0.25)	0.039 (0.067)
R-7.5 (1.32)	R-22.8 (4.02)	0.044 (0.25)	0.084 (0.146)
R-15 (2.64)	R-23.0 (4.04)	0.044 (0.25)	0.108 (0.187)

Temperature Indices

	R0	R7.5	R15	
T_{i1}	0.08	0.11	0.13	Min T on sheathing, between studs
T_{i2}	0.26	0.26	0.27	Max T on sheathing, along top plate

Detail 8.4.4

Ventilated Wood Frame Low Slope Roof – Masonry Firewall Intersection

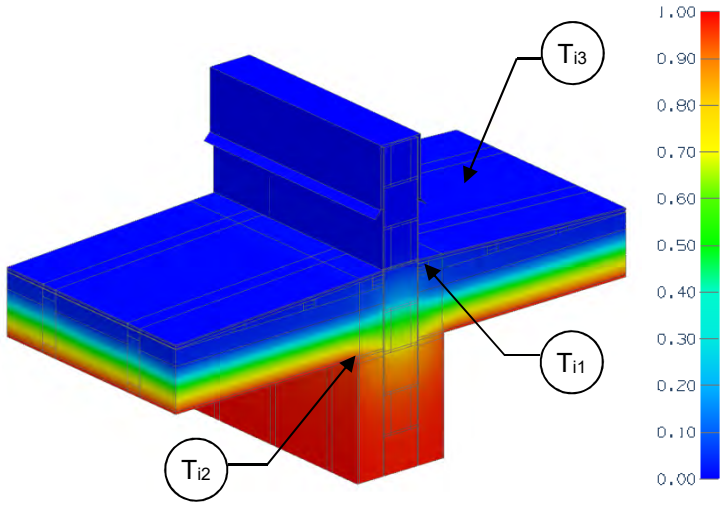

Thermal Performance Indicators

Assembly 1D (Nominal) R-Value	R_{1D}	R-3.5 (0.62 RSI) + exterior insulation
Transmittance / Resistance without Anomaly	U_o, R_o	"clear field" U- and R-value, without firewall
Transmittance / Resistance	U, R	U and R-values for the overall assembly
Surface Temperature Index[1]	T_i	0 = exterior temperature 1 = interior temperature
Linear Transmittance	ψ	Incremental increase in transmittance per linear length of fire wall

[1]Assumptions and limitations for surface temperatures identified in ASHRAE 1365-RP

Nominal (1D) vs. Assembly Performance Indicators

Roof Insulation 1D R-Value (RSI)	R_{1D} ft²·hr·°F / Btu (m² K / W)	R_o ft²·hr·°F / Btu (m² K / W)	U_o Btu/ft² ·hr ·°F (W/m² K)	R ft²·hr·°F / Btu (m² K / W)	U Btu/ft² ·hr ·°F (W/m² K)	ψ Btu/ft ·hr·°F (W/m K)
R-30 (5.28)	R-33.5 (5.90)	R-29.7 (5.22)	0.034 (0.19)	R-26.3 (4.64)	0.038 (0.22)	0.037 (0.064)

Temperature Indices

T_{i1}	0.02	Min T on concrete block, at roof sheathing intersection
T_{i2}	0.80	Max T on concrete block, at roof joist intersection
T_{i3}	0.03	Min T on roof sheathing, between joists

Detail 8.4.5

Exterior Insulated Cross Laminated Timber (CLT) Wall Assembly with Continuous Rigid Insulation Supporting Fiber Cement Board – Low-Slope Roof & Parapet Intersection

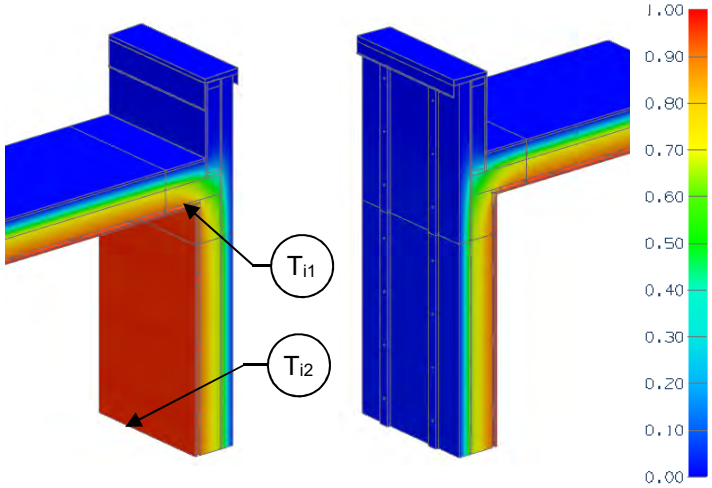

View from Interior View from Exterior

Thermal Performance Indicators

Assembly 1D (Nominal) R-Value	R_{1D}	R-9.9 (1.74 RSI) + exterior insulation
Transmittance / Resistance without Anomaly	U_r, R_r, U_w, R_w	"clear field" U- and R-value r = roof w = CLT wall without parapet
Transmittance / Resistance	U, R	U and R-values for the overall assembly
Surface Temperature Index[1]	T_i	0 = exterior temperature 1 = interior temperature
Linear Transmittance	ψ	Incremental increase in transmittance per linear length of parapet

[1]Assumptions and limitations for surface temperatures identified in ASHRAE 1365-RP

Nominal (1D) vs. Assembly Performance Indicators

Base Assembly – Wall

Wall Exterior Insulation 1D R-Value (RSI)	R_{1D} ft²·hr·ºF / Btu (m² K / W)	R_w ft²·hr·ºF / Btu (m² K / W)	U_w Btu/ft² ·hr ·ºF (W/m² K)
R-15.0 (2.64)	R-24.9 (4.38)	R-24.7 (4.35)	0.040 (0.23)
R-20.0 (3.52)	R-29.9 (5.26)	R-29.4 (5.17)	0.034 (0.19)
R-25.0 (4.40)	R-34.9 (6.14)	R-33.9 (5.98)	0.029 (0.17)

Base Assembly – Roof

Roof Insulation 1D R-Value (RSI)	R_r ft² hr ºF / Btu (m² K / W)	U_r Btu/ft² ·hr ·ºF (W/m² K)
R-20.0 (3.52)	R-28.1 (4.96)	0.036 (0.20)
R-30.0 (5.28)	R-38.1 (6.72)	0.026 (0.15)
R-40.0 (7.04)	R-48.1 (8.48)	0.021 (0.12)
R-50.0 (8.81)	R-58.1 (10.24)	0.017 (0.10)

Parapet Linear Transmittance

Roof Insulation 1D R-Value (RSI)	R-15 Wall Insulation			R-20 Wall Insulation			R-25 Wall Insulation		
	R ft²·hr·ºF/Btu (m² K/W)	U Btu/ft² ·hr ·ºF (W/m² K)	ψ Btu/ft ·hr·ºF (W/m K)	R ft²·hr·ºF/Btu (m² K/W)	U Btu/ft² ·hr ·ºF (W/m² K)	ψ Btu/ft ·hr·ºF (W/m K)	R ft²·hr·ºF/Btu (m² K/W)	U Btu/ft² ·hr ·ºF (W/m² K)	ψ Btu/ft ·hr·ºF (W/m K)
R-20.0 (3.52)	R-18.3 (3.23)	0.055 (0.31)	0.030 (0.053)	R-19.9 (3.51)	0.050 (0.28)	0.030 (0.051)	R-21.3 (3.74)	0.047 (0.27)	0.029 (0.051)
R-30.0 (5.28)	R-20.7 (3.65)	0.048 (0.27)	0.029 (0.051)	R-22.8 (4.02)	0.044 (0.25)	0.028 (0.049)	R-24.6 (4.33)	0.041 (0.23)	0.028 (0.048)
R-40.0 (7.04)	R-22.4 (3.95)	0.045 (0.25)	0.029 (0.050)	R-24.9 (4.39)	0.040 (0.23)	0.027 (0.047)	R-27.1 (4.76)	0.037 (0.21)	0.026 (0.046)
R-50.0 (8.81)	R-23.7 (4.17)	0.042 (0.24)	0.029 (0.050)	R-26.5 (4.66)	0.038 (0.21)	0.027 (0.047)	R-28.9 (5.10)	0.035 (0.20)	0.026 (0.045)

Temperature Indices

	R15 Wall / R20 Roof	R20 Wall / R30 Roof	R25 Wall / R50 Roof	
T_{i1}	0.74	0.78	0.82	Min T on CLT, at wall to roof corner
T_{i2}	0.92	0.93	0.94	Max T on CLT on wall away from corner

Temperature indices for all other scenarios can be interpolated

Detail 8.5.1

Exterior and Interior Insulated 2x6 Wood Stud (16" o.c.) Wall Assembly with Wood Strapping Supporting and Continuous Insulation Fiber Cement Board – Corner Intersection

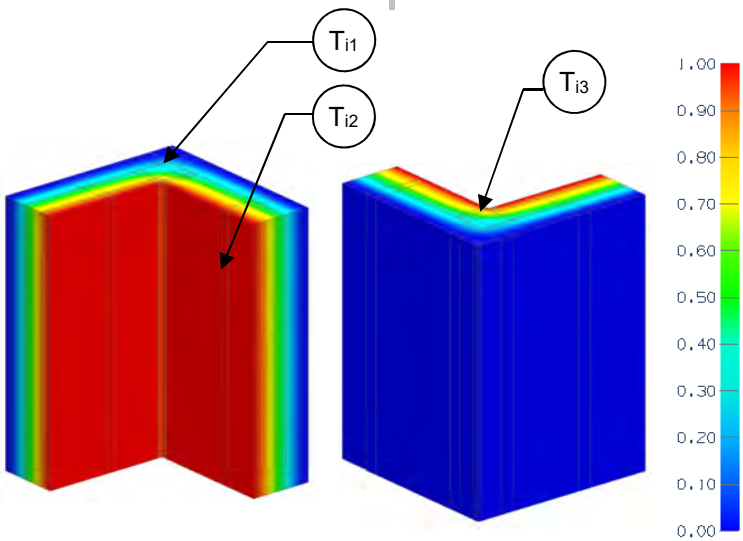

View from Interior View from Exterior

Thermal Performance Indicators

Assembly 1D (Nominal) R-Value	R_{1D}	R-21.6 (3.80 RSI) + exterior insulation
Transmittance / Resistance without Anomaly	U_o, R_o	"clear wall" U- and R-value, without corner
Transmittance / Resistance	U, R	U and R-values for the overall assembly
Surface Temperature Index[1]	T_i	0 = exterior temperature 1 = interior temperature
Linear Transmittance	ψ	Incremental increase in transmittance per linear length of corner

[1]Assumptions and limitations for surface temperatures identified in ASHRAE 1365-RP

Nominal (1D) vs. Assembly Performance Indicators

Exterior Insulation 1D R-Value (RSI)	R_{1D} ft²·hr·°F / Btu (m² K / W)	R_o ft²·hr·°F / Btu (m² K / W)	U_o Btu/ft² ·hr ·°F (W/m² K)	R ft²·hr·°F / Btu (m² K / W)	U Btu/ft² ·hr ·°F (W/m² K)	ψ Btu/ft ·hr·°F (W/m K)
R-0 (0)	R-21.7 (3.82)	R-19.7 (3.47)	0.051 (0.29)	R-17.9 (3.15)	0.056 (0.32)	0.020 (0.035)
R-5 (0.88)	R-26.6 (4.68)	R-24.6 (4.33)	0.041 (0.23)	R-21.8 (3.85)	0.046 (0.26)	0.020 (0.034)
R-15 (2.64)	R-36.6 (6.44)	R-33.7 (5.93)	0.030 (0.17)	R-28.6 (5.03)	0.035 (0.20)	0.021 (0.036)

Temperature Indices

	R0	R5	R15	
T_{i1}	-	0.10	0.19	Min T on sheathing, at fasteners at corner intersection
T_{i2}	0.13	0.32	0.49	Max T on sheathing, along studs between fasteners
T_{i3}	0.02	-	-	Min T on sheathing, at corner intersection

Detail 8.6.1

Wood-frame Sliding Door – Concrete Floor Intersection for Unheated Spaces (Parking Garages)

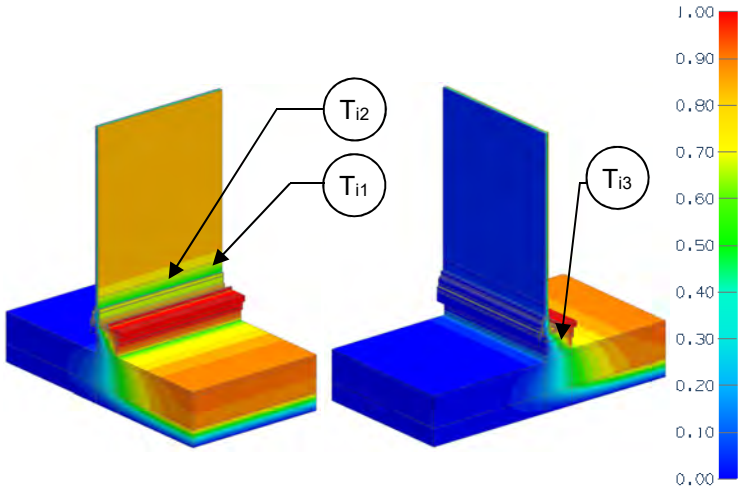

View from Interior View from Exterior

Thermal Performance Indicators

Assembly 1D (Nominal) R-Value	R_{1D}	R-2.3 (0.41 RSI) + Insulation
Transmittance / Resistance without Anomaly	U_f, R_f, U_g	"clear field" U- and R-value f = floor g = glazed sliding door
Transmittance / Resistance	U, R	U and R-values for the overall assembly
Surface Temperature Index[1]	T_i	0 = exterior temperature 1 = interior temperature
Linear Transmittance	ψ	Incremental increase in transmittance per linear length of floor to sliding door transition

[1]Assumptions and limitations for surface temperatures identified in ASHRAE 1365-RP

Nominal (1D) vs. Assembly Performance Indicators

Base Assembly – Floor

Floor Exterior Insulation 1D R-Value (RSI)	R_{1D} ft²·hr·°F / Btu (m² K / W)	R_f ft²·hr·°F / Btu (m² K / W)	U_f Btu/ft² ·hr ·°F (W/m² K)
R-20 (3.52)	R-22.3 (3.93)	R-22.3 (3.93)	0.044 (0.25)

Base Assembly – Sliding Door

$U_{centre\ of\ glass}$ Btu/ft² ·hr ·°F (W/m² K)	U_g Btu/ft² ·hr ·°F (W/m² K)
0.321 (1.82)	0.323 (1.83)

Sliding Door Sill/ Curb to Floor Linear Transmittance

Wall Exterior Insulation 1D R-Value (RSI)	R ft²·hr·°F / Btu (m² K / W)	U Btu/ft² ·hr ·°F (W/m² K)	ψ Btu/ft ·hr·°F (W/m K)
R-20 (3.52)	R-3.5 (0.621)	0.284 (1.61)	0.320 (0.554)

Temperature Indices

T_{i1}	0.47	-	Min T on glass
T_{i2}	0.42	0.13	Min T on frame
T_{i3}	0.55	0.02	Min T on floor, at interior surface of wood curb

Detail 8.6.2

Exterior and Interior Insulated 2x6 Wood Stud (16" o.c.) Wall Assembly with Continuous Insulation and Wood Strapping Supporting Fiber Cement Board – Rim Joist and Interior Insulated At-Grade Foundation Wall Intersection

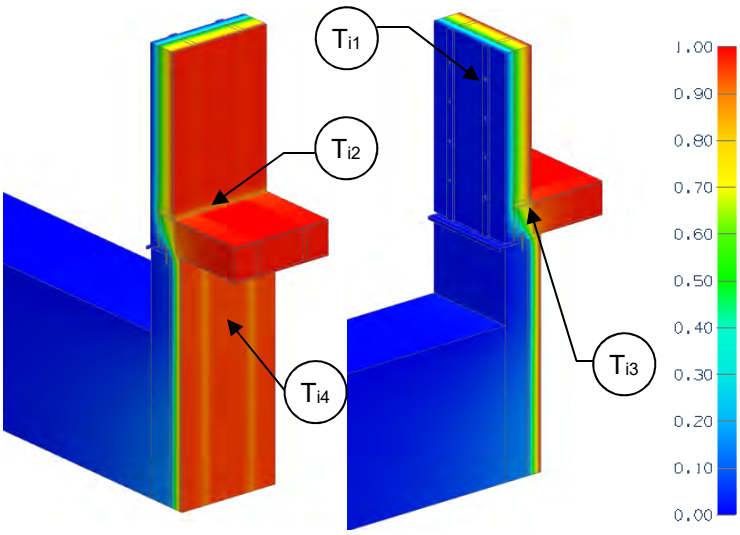

View from Interior View from Exterior

Thermal Performance Indicators

Assembly 1D (Nominal) R-Value	R_{1Dw}, R_{1Dfw}	R-21.6 (3.80 RSI) + exterior insulation for wood framed wall R-1.8 (0.32 RSI) + interior insulation for foundation w = wood framed wall fw = foundation wall
Transmittance / Resistance without Anomaly	U_w, R_w, U_{fw}, R_{fw},	"clear field" U- and R-values
Transmittance / Resistance	U, R	U and R-values for the overall assembly
Surface Temperature Index[1]	T_i	0 = exterior temperature 1 = interior temperature
Linear Transmittance	ψ	Incremental increase in transmittance per linear length of foundation

[1]Assumptions and limitations for surface temperatures identified in ASHRAE 1365-RP

Nominal (1D) vs. Assembly Performance Indicators

Base Assembly – Wall

Exterior Insulation 1D R-Value (RSI)	R_{1Dw} ft²·hr·°F / Btu (m² K / W)	R_w ft²·hr·°F / Btu (m² K / W)	U_w Btu/ft² ·hr ·°F (W/m² K)
R-5 (0.88)	R-26.6 (4.68)	R-24.6 (4.32)	0.041 (0.23)
R-10 (1.76)	R-31.6 (5.56)	R-29.2 (5.14)	0.034 (0.19)
R-15 (2.64)	R-36.6 (6.44)	R-33.7 (5.93)	0.030 (0.17)

Base Assembly – Foundation Wall

Foundation Insulation 1D R-Value (RSI)	R_{1Dfw} ft² hr °F / Btu (m² K / W)	R_{fw} ft²·hr·°F / Btu (m² K / W)	U_{fw} Btu/ft² ·hr ·°F (W/m² K)
R-19 (3.34)	R-20.8 (3.67)	R-12.7 (2.23)	0.079 (0.449)

Foundation Linear Transmittance

Exterior Insulation 1D R-Value (RSI)	R ft²·hr·°F / Btu (m² K / W)	U Btu/ft² ·hr ·°F (W/m² K)	ψ Btu/ft ·hr·°F (W/m K)
R-5 (0.88)	R-15.9 (2.81)	0.063 (0.36)	0.046 (0.080)
R-10 (1.76)	R-16.7 (2.94)	0.060 (0.34)	0.047 (0.082)
R-15 (2.64)	R-17.2 (3.03)	0.058 (0.33)	0.050 (0.087)

Temperature Indices

	R5	R10	R15	
T_{i1}	0.25	0.36	0.43	Min T on sheathing, along studs at fasteners
T_{i2}	0.40	0.49	0.55	Max T on sheathing, along studs between fasteners and at bottom plate
T_{i3}	0.10	0.11	0.12	Min T on floor foundation sill plate, at rim joist
T_{i4}	0.07	0.07	0.07	Min T on foundation wall, at midsection between floor and grade between studs

Detail 8.6.3

Exterior and Interior Insulated 2x6 Wood Stud (16" o.c.) Wall Assembly with Continuous Insulation and Wood Strapping Supporting Fiber Cement Board – Rim Joist and Exterior Insulated At-Grade Foundation Wall Intersection

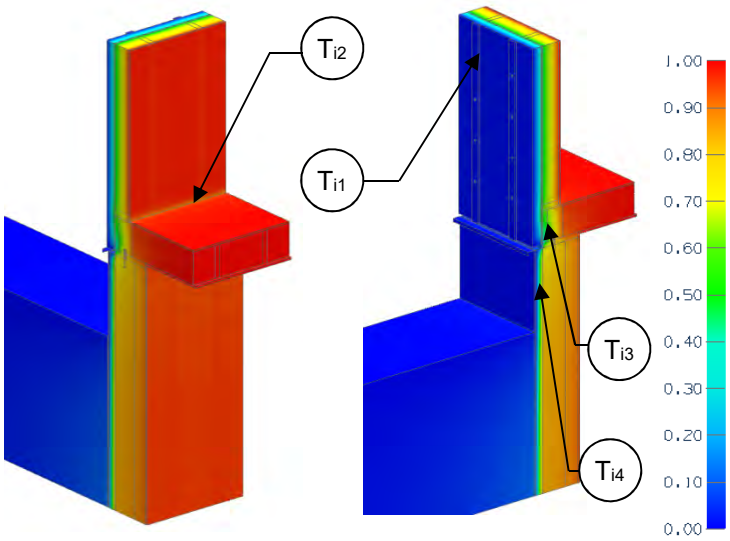

View from Interior View from Exterior

Thermal Performance Indicators

Assembly 1D (Nominal) R-Value	R_{1Dw}, R_{1Dfw}	R-21.6 (3.80 RSI) + exterior insulation for wood framed wall R-3.5 (0.62 RSI) + insulation for foundation w = wood framed wall fw = foundation wall
Transmittance / Resistance without Anomaly	U_w, R_w, U_{fw}, R_{fw},	"clear field" U- and R-value
Transmittance / Resistance	U, R	U and R-values for the overall assembly
Surface Temperature Index[1]	T_i	0 = exterior temperature 1 = interior temperature
Linear Transmittance	ψ	Incremental increase in transmittance per linear length of foundation

[1]Assumptions and limitations for surface temperatures identified in ASHRAE 1365-RP

Nominal (1D) vs. Assembly Performance Indicators

Base Assembly – Wall

Exterior Insulation 1D R-Value (RSI)	R_{1Dw} ft²·hr·°F / Btu (m² K / W)	R_w ft²·hr·°F / Btu (m² K / W)	U_w Btu/ft² ·hr ·°F (W/m² K)
R-5 (0.88)	R-26.6 (4.68)	R-24.6 (4.32)	0.041 (0.23)
R-10 (1.76)	R-31.6 (5.56)	R-29.2 (5.14)	0.034 (0.19)
R-15 (2.64)	R-36.6 (6.44)	R-33.7 (5.93)	0.030 (0.17)

Base Assembly – Foundation Wall

Foundation Insulation 1D R-Value (RSI)	R_{1Dfw} ft² hr °F / Btu (m² K / W)	R_{fw} ft²·hr·°F / Btu (m² K / W)	U_{fw} Btu/ft² ·hr ·°F (W/m² K)
R-12.5 (2.20)	R-16.0 (2.82)	R-16.0 (2.82)	0.062 (0.355)

Foundation Linear Transmittance

Exterior Insulation 1D R-Value (RSI)	R ft²·hr·°F / Btu (m² K / W)	U Btu/ft² ·hr ·°F (W/m² K)	ψ Btu/ft ·hr·°F (W/m K)
R-5 (0.88)	R-18.0 (3.16)	0.056 (0.32)	0.060 (0.104)
R-10 (1.76)	R-19.0 (3.34)	0.053 (0.30)	0.059 (0.102)
R-15 (2.64)	R-19.7 (3.47)	0.051 (0.29)	0.059 (0.103)

Temperature Indices

	R5	R10	R15	
T_{i1}	0.25	0.36	0.43	Min T on sheathing, along studs at fasteners
T_{i2}	0.39	0.49	0.55	Max T on sheathing, along studs between fasteners and at bottom plate
T_{i3}	0.48	0.50	0.51	Min T on floor foundation sill plate, at rim joist
T_{i4}	0.82	0.82	0.82	Min T on foundation wall, at midsection between floor and grade between studs

Detail 8.6.4

Exterior and Interior Insulated 2x6 Wood Stud (16" o.c.) Wall Assembly with Shelf Angle & Brick Ties Supporting Brick Veneer – Exterior Insulated At-Grade Foundation Wall Intersection

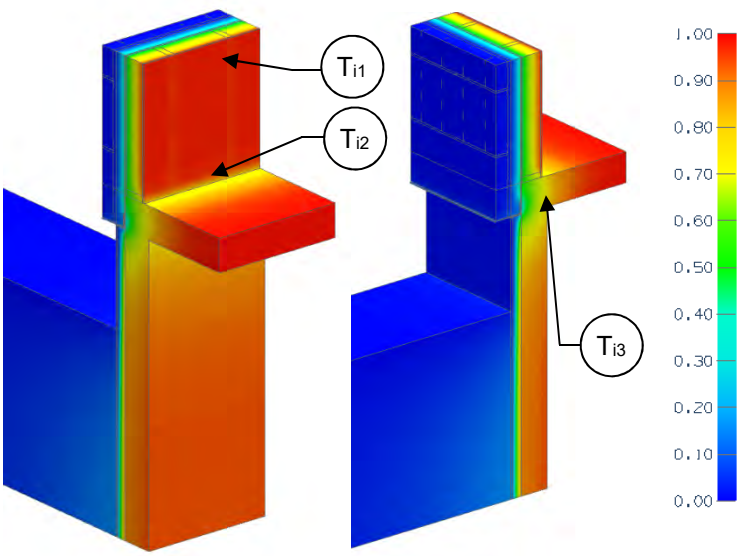

View from Interior View from Exterior

Thermal Performance Indicators

Assembly 1D (Nominal) R-Value	R_{1Dw}, R_{1Dfw}	R-22.6 (3.98 RSI) + exterior insulation for wood framed wall R-1.3 (0.29 RSI) + insulation for foundation w = wood framed wall fw = foundation wall
Transmittance / Resistance without Anomaly	U_w, R_w, U_{fw}, R_{fw},	"clear wall" U- and R-value
Transmittance / Resistance	U, R	U and R-values for the overall assembly
Surface Temperature Index[1]	T_i	0 = exterior temperature 1 = interior temperature
Linear Transmittance	ψ	Incremental increase in transmittance per linear length of foundation

[1]Assumptions and limitations for surface temperatures identified in ASHRAE 1365-RP

Nominal (1D) vs. Assembly Performance Indicators

Base Assembly – Wall

Exterior Insulation 1D R-Value (RSI)	R_{1Dw} ft²·hr·°F / Btu (m² K / W)	R_w ft²·hr·°F / Btu (m² K / W)	U_w Btu/ft² ·hr ·°F (W/m² K)
R-5 (0.88)	R-27.6 (4.86)	R-24.1 (4.25)	0.041 (0.24)
R-10 (1.76)	R-32.6 (5.56)	R-28.0 (4.93)	0.036 (0.20)
R-15 (2.64)	R-37.6 (6.44)	R-31.5 (5.54)	0.032 (0.18)

Base Assembly – Foundation Wall

Foundation Insulation 1D R-Value (RSI)	R_{1Dfw} ft² hr °F / Btu (m² K / W)	R_{fw} ft²·hr·°F / Btu (m² K / W)	U_{fw} Btu/ft² ·hr ·°F (W/m² K)
R-12.5 (2.20)	R-13.8 (2.43)	R-13.8 (2.43)	0.072 (0.412)

Foundation Linear Transmittance

Exterior Insulation 1D R-Value (RSI)	R ft²·hr·°F / Btu (m² K / W)	U Btu/ft² ·hr ·°F (W/m² K)	ψ Btu/ft ·hr·°F (W/m K)
R-5 (0.88)	R-8.7 (1.53)	0.115 (0.66)	0.493 (0.853)
R-10 (1.76)	R-8.8 (1.54)	0.114 (0.65)	0.509 (0.881)
R-15 (2.64)	R-8.8 (1.55)	0.114 (0.65)	0.523 (0.905)

Temperature Indices

	R5	R10	R15	
T_{i1}	0.19	0.24	0.27	Min T on sheathing, at brick ties adjacent to the studs
T_{i2}	0.50	0.51	0.51	Max T on sheathing, at concrete floor intersection
T_{i3}	0.78	0.78	0.78	Min T on foundation wall, at floor intersection

Detail 8.6.5

Exterior and Interior Insulated 2x6 Wood Stud (16" o.c.) Wall Assembly with Shelf Angle & Brick Ties Supporting Brick Veneer – Intermediate Floor Intersection

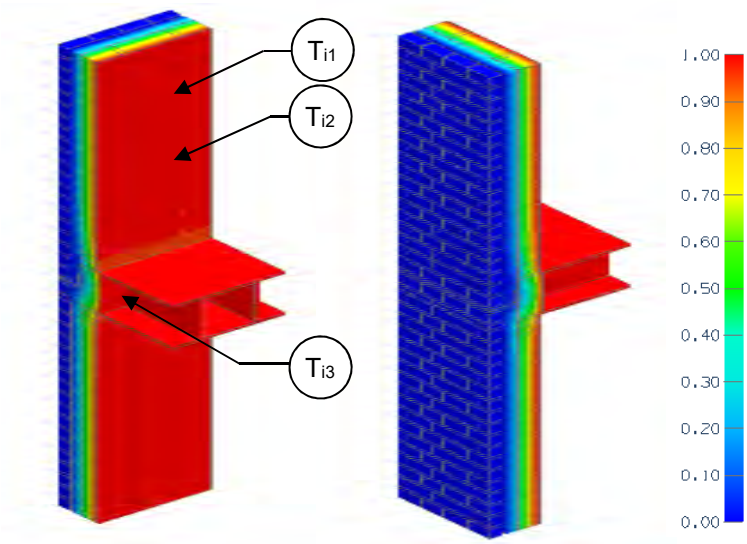

View from Interior View from Exterior

Thermal Performance Indicators

Assembly 1D (Nominal) R-Value	R_{1D}	R-27.4 (4.83 RSI) + exterior insulation
Transmittance / Resistance without Anomaly	U_o, R_o	"clear wall" U- and R-value, without floor
Transmittance / Resistance	U, R	U and R-values for the overall assembly
Surface Temperature Index[1]	T_i	0 = exterior temperature 1 = interior temperature
Linear Transmittance	ψ	Incremental increase in transmittance per linear length of wood framed floor

[1]Assumptions and limitations for surface temperatures identified in ASHRAE 1365-RP

Nominal (1D) vs. Assembly Performance Indicators

Exterior Insulation 1D R-Value (RSI)	R_{1D} ft²·hr·°F / Btu (m² K / W)	R_o ft²·hr·°F / Btu (m² K / W)	U_o Btu/ft² ·hr ·°F (W/m² K)	R ft²·hr·°F / Btu (m² K / W)	U Btu/ft² ·hr ·°F (W/m² K)	ψ Btu/ft ·hr·°F (W/m K)
R-0.0 (0.00)	R-27.4 (4.83)	R-19.8 (3.49)	0.050 (0.29)	R-18.5 (3.25)	0.054 (0.307)	0.034 (0.058)
R-10.0 (1.76)	R-37.4 (6.59)	R-28.0 (4.93)	0.036 (0.20)	R-24.4 (4.30)	0.041 (0.233)	0.048 (0.083)

Temperature Indices

	R0	R10	
T_{i1}	0.19	0.32	T on sheathing, at studs near brick ties
T_{i2}	0.15	0.42	T on sheathing, at studs between brick ties
T_{i3}	0.43	0.49	Min T on rim joist, between floor joists

Detail 8.6.6

Exterior and Interior Insulated 2x6 Wood Stud (16" o.c.) Wall Assembly with Stand-off (Knife Plate) Shelf Angle & Brick Ties Supporting Brick Veneer – Intermediate Floor Intersection

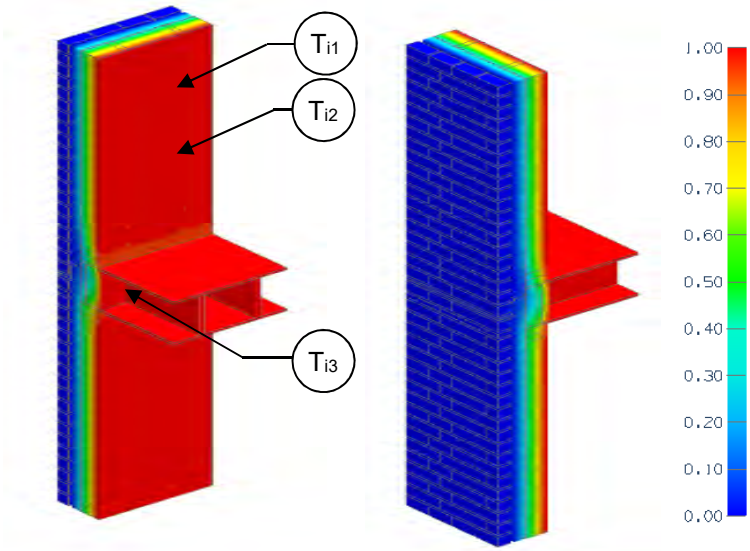

View from Interior View from Exterior

Thermal Performance Indicators

Assembly 1D (Nominal) R-Value	R_{1D}	R-27.4 (4.83 RSI) + exterior insulation
Transmittance / Resistance without Anomaly	U_o, R_o	"clear wall" U- and R-value, without floor
Transmittance / Resistance	U, R	U and R-values for the overall assembly
Surface Temperature Index[1]	T_i	0 = exterior temperature 1 = interior temperature
Linear Transmittance	ψ	Incremental increase in transmittance per linear length of wood framed floor

[1]Assumptions and limitations for surface temperatures identified in ASHRAE 1365-RP

Nominal (1D) vs. Assembly Performance Indicators

Exterior Insulation 1D R-Value (RSI)	R_{1D} ft²·hr·°F / Btu (m² K / W)	R_o ft²·hr·°F / Btu (m² K / W)	U_o Btu/ft² ·hr ·°F (W/m² K)	R ft²·hr·°F / Btu (m² K / W)	U Btu/ft² ·hr ·°F (W/m² K)	ψ Btu/ft ·hr·°F (W/m K)
R-0.0 (0.00)	R-27.4 (4.83)	R-19.8 (3.49)	0.050 (0.29)	R-18.5 (3.26)	0.054 (0.307)	0.032 (0.056)
R-10.0 (1.76)	R-37.4 (6.59)	R-28.0 (4.93)	0.036 (0.20)	R-24.8 (4.36)	0.040 (0.229)	0.043 (0.074)

Temperature Indices

	R0	R10	
T_{i1}	0.19	0.34	T on sheathing, at studs near brick ties
T_{i2}	0.15	0.42	T on sheathing, at studs between brick ties
T_{i3}	0.24	0.30	Min T on rim joist, at fasteners

Detail 8.7.1

Exterior Insulated Wood Infill Wall Assembly with Wood Strapping and Continuous Insulation Supporting Fiber Cement Board – Concrete Wall and Intermediate Floor Intersection with Flashing Bypassing Exterior Insulation

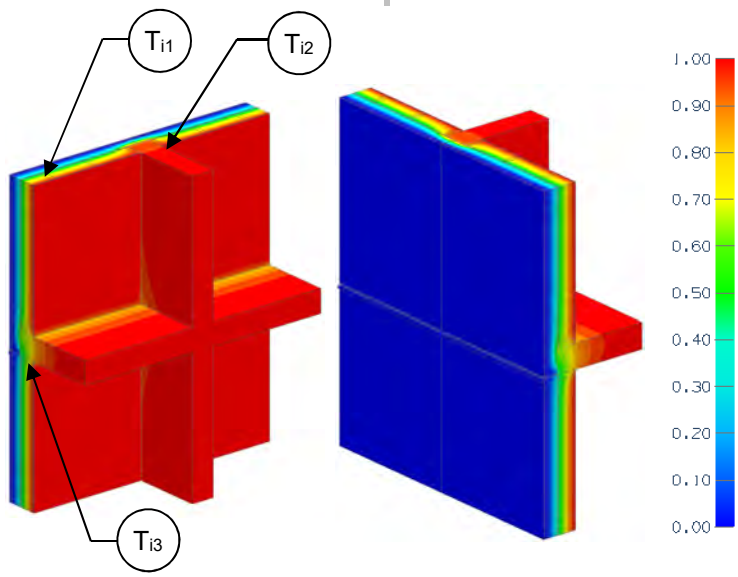

View from Interior View from Exterior

Thermal Performance Indicators

Assembly 1D (Nominal) R-Value	R_{1D}	R-21.6 (3.80 RSI) + exterior insulation
Transmittance / Resistance without Anomaly	U_o, R_o	"clear field" U- and R-value of concrete and wood infill assembly
Transmittance / Resistance	U_s, R_s, U_i, R_t, U_t, R_t,	U and R-values for: s = wood infill wall + slab i = wood infill wall + interior wall t = combined assembly with wood infill wall + slab + interior wall
Surface Temperature Index[1]	T_i	0 = exterior temperature 1 = interior temperature
Linear Transmittance	ψ_s, ψ_i	Incremental increase in transmittance per linear length of s = slab i = interior wall
Point Transmittance	χ	Incremental increase in transmittance for inner wall and slab intersection

[1]Assumptions and limitations for surface temperatures identified in ASHRAE 1365-RP

Nominal (1D) vs. Assembly Performance Indicators

Base Assembly – Wall

Wall Exterior Insulation 1D R-Value (RSI)	R_{1D} ft²·hr·°F / Btu (m² K / W)	R_o ft²·hr·°F / Btu (m² K / W)	U_o Btu/ft² ·hr ·°F (W/m² K)
R-5 (0.88)	R-26.6 (4.68)	R-24.6 (4.33)	0.041 (0.23)
R-10 (1.76)	R-31.6 (5.56)	R-29.2 (5.14)	0.034 (0.19)
R-15 (2.64)	R-36.6 (6.44)	R-33.7 (5.93)	0.030 (0.17)

Slab Linear Transmittance

R_s ft² hr °F / Btu (m² K / W)	U_s Btu/ft² ·hr ·°F (W/m² K)	ψ_s Btu/ft ·hr ·°F (W/m K)
R-12.8 (2.25)	0.078 (0.44)	0.34 (0.582)
R-14.1 (2.48)	0.071 (0.40)	0.33 (0.568)
R-15.5 (2.72)	0.065 (0.37)	0.31 (0.542)

Interior Linear Transmittance

Wall Exterior Insulation 1D R-Value (RSI)	R_i ft²·hr·°F / Btu (m² K / W)	U_i Btu/ft² ·hr ·°F (W/m² K)	ψ_i Btu/ft ·hr·°F (W/m K)
R-5 (0.88)	R-17.0 (3.00)	0.059 (0.33)	0.13 (0.232)
R-10 (1.76)	R-21.4 (3.78)	0.047 (0.26)	0.09 (0.159)
R-15 (2.64)	R-26.1 (4.60)	0.038 (0.22)	0.06 (0.110)

Intersection Point Transmittance

R_t ft²·hr·°F / Btu (m² K / W)	U_t Btu/ft² ·hr ·°F (W/m² K)	χ[2] Btu/·hr ·°F (W/K)
R-10.9 (1.93)	0.091 (0.52)	-0.40 (-0.209)
R-12.6 (2.22)	0.079 (0.45)	-0.34 (-0.178)
R-13.8 (2.42)	0.073 (0.41)	-0.11 (-0.059)

[2]Values are negative for a correction factor. See section 6 in ASHRAE 1365-RP for clarification.

Temperature Indices

	R5	R10	R15	
T_{i1}	0.25	0.33	0.38	Min T on sheathing, along studs at fasteners
T_{i2}	0.80	0.86	0.89	Max T on sheathing, along edge of interior concrete wall
T_{i3}	0.77	0.77	0.78	Min T on concrete, at wood frame wall and concrete ceiling intersection

Detail 8.7.2

Exterior Insulated Cross Laminated Timber (CLT) Wall Assembly with Wood Strapping and Continuous Rigid Insulation Supporting Fiber Cement Board – Cross Laminated Timber Floor Intersection with Flashing Bypassing Exterior Insulation

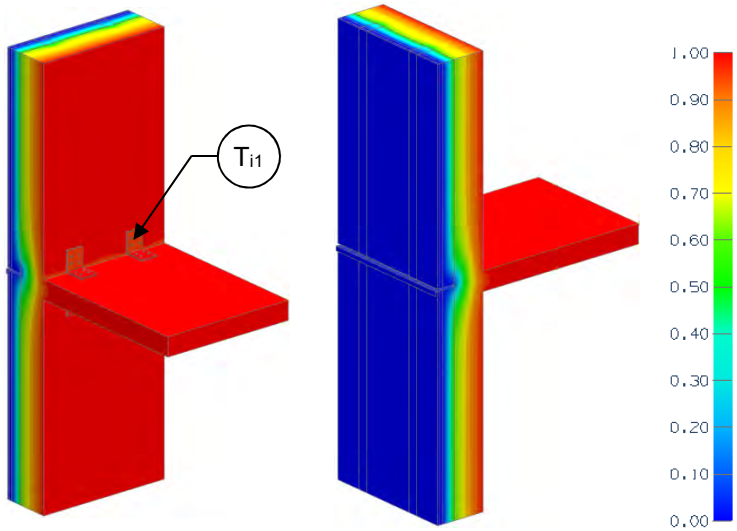

View from Interior View from Exterior

Thermal Performance Indicators

Assembly 1D (Nominal) R-Value	R_{1D}	R-10.5 (1.85 RSI) + exterior insulation
Transmittance / Resistance without Anomaly	U_o, R_o	"clear wall" U- and R-value, without CLT floor slab
Transmittance / Resistance	U, R	U and R-values for the overall assembly
Surface Temperature Index[1]	T_i	0 = exterior temperature 1 = interior temperature
Linear Transmittance	ψ	Incremental increase in transmittance per linear length of CLT floor slab

[1]Assumptions and limitations for surface temperatures identified in ASHRAE 1365-RP

Nominal (1D) vs. Assembly Performance Indicators

Exterior Insulation 1D R-Value (RSI)	R_{1D} ft²·hr·°F / Btu (m² K / W)	R_o ft²·hr·°F / Btu (m² K / W)	U_o Btu/ft² ·hr ·°F (W/m² K)	R ft²·hr·°F / Btu (m² K / W)	U Btu/ft² ·hr ·°F (W/m² K)	ψ Btu/ft ·hr·°F (W/m K)
R-15 (2.64)	R-25.5 (4.49)	R-22.9 (4.04)	0.044 (0.25)	R-21.6 (3.81)	0.046 (0.26)	0.044 (0.075)
R-20 (3.52)	R-30.5 (5.37)	R-26.8 (4.72)	0.037 (0.21)	R-24.4 (4.30)	0.041 (0.23)	0.049 (0.084)
R-25 (4.40)	R-35.5 (6.25)	R-30.5 (5.36)	0.033 (0.19)	R-26.9 (4.73)	0.037 (0.21)	0.053 (0.092)

Temperature Indices

	R15	R20	R25	
T_{i1}	0.95	0.95	0.95	Min T on bolt head around edge touching bracket

9.0 Doors and Balconies

Detail 9.1.1 ..... **B.9.1**

Interior Insulated Concrete Curb at Sliding Door Sill and Window Head – Intermediate Floor Intersection

Detail 9.1.2 ..... **B.9.2**

Non- Insulated Sliding Door Sill and Window Head – Intermediate Floor Intersection

Detail 9.1.3 ..... **B.9.3**

Interior Insulated Concrete Curb – Window-Wall and Intermediate Floor Intersection

Detail 9.1.4 ..... **B.9.4**

Exterior Insulated Concrete Curb at Sliding Door Sill and Head- Intermediate Floor Intersection

Detail 9.1.5 ..... **B.9.5**

Exterior Insulated Concrete Curb – Window-Wall and Recessed Intermediate Floor Intersection

Detail 9.1.6 ..... **B.9.6**

Window Wall System with Spandrel Panels and Sliding Door - Concrete Balcony and Curb Intersection

Detail 9.1.7 ..... **B.9.7**

Window-wall with Sliding Door and Insulated Spandrel Section – Concrete Intermediate Floor Intersection without Concrete Curb for Alternative Balcony Slab Connections

Detail 9.1.8 ..... **B.9.8**

Window Wall System with Spandrel Panels and Sliding Door - Thermally Broken Concrete Balcony and Curb Intersection

Detail 9.1.9 ..... **B.9.9**

Window Wall System with Spandrel Panels - Concrete Balcony and Bypass Intersection

Detail 9.1.10 ..... **B.9.10**

Interior Insulated 3 5/8” x 1 5/8” Steel Stud (16” o.c.) Wall Assembly - Door Sill with Exterior Slab Insulation

Detail 9.1.11 ..... **B.9.11**

Exterior and Interior Insulated 3 5/8” x 1 5/8” Steel Stud (16” o.c.) Wall Assembly - Door Sill with Exterior Slab Insulation

Detail 9.1.12 ..... **B.9.12**

Window Wall System with Spandrel Panels and Sliding Door - Schöck Isokorb K65-V8 Thermal Break at Concrete Balcony and Curb Intersection

Detail 9.1.13 ..... **B.9.13**

Window Wall System with Spandrel Panels and Sliding Door - Schöck Isokorb K10-V6 Thermal Break at Concrete Balcony and Curb Intersection

Detail 9.1.14 ..... B.9.14

Window Wall System with Spandrel Panels and Sliding Door - Schöck Isokorb KXT65-V8 Thermal Break at Concrete Balcony and Curb Intersection

Detail 9.1.15 ..... B.9.15

Window Wall System with Spandrel Panels and Sliding Door - Schöck Isokorb KXT15-V6 Thermal Break at Concrete Balcony and Curb Intersection

Detail 9.1.16 ..... B.9.16

Exterior Insulated 2''x6'' Steel Stud (16'' o.c.) Wall Assembly with FRP Vertical Brackets and Rail System Supporting Metal Cladding and Sliding Door – Intermittently Attached Balcony and Sliding Door Intersection

Detail 9.1.17 ..... B.9.17

Exterior and Interior Insulated 2''x6'' Steel Stud (16'' o.c.) Wall Assembly with FRP Vertical Brackets and Rail System Supporting Metal Cladding with R-19 Batt in Stud Cavity and Sliding Door – Intermittently Attached Balcony and Sliding Door Intersection

Detail 9.1.18 ..... B.9.18

Exterior Insulated 2" x 6" Steel Stud (16" o.c.) Wall Assembly with Vertical Clips (24" o.c.) Supporting Cladding and Sliding Door – Concrete Balcony and Curb Intersection

Detail 9.1.19 ..... B.9.19

Exterior and Interior Insulated 2" x 6" Steel Stud (16" o.c.) Wall Assembly with Vertical Clips (24" o.c.) Supporting Cladding with R-19 Batt in Stud Cavity and Sliding Door – Concrete Balcony and Curb Intersection

Detail 9.1.20 ..... B.9.20

Exterior Insulated 2" x 6" Steel Stud (16" o.c.) Wall Assembly with Vertical Clips (24" o.c.) Supporting Cladding and Sliding Door – Structural Thermal Break at Concrete Balcony and Curb Intersection

Detail 9.1.21 ..... B.9.21

Exterior and Interior Insulated 2" x 6" Steel Stud (16" o.c.) Wall Assembly with Vertical Clips (24" o.c.) Supporting Cladding with R-19 Batt in Stud Cavity and Sliding Door – Structural Thermal Break at Concrete Balcony and Curb Intersection

Detail 9.1.1

Interior Insulated Concrete Curb at Sliding Door Sill and Window Head – Intermediate Floor Intersection

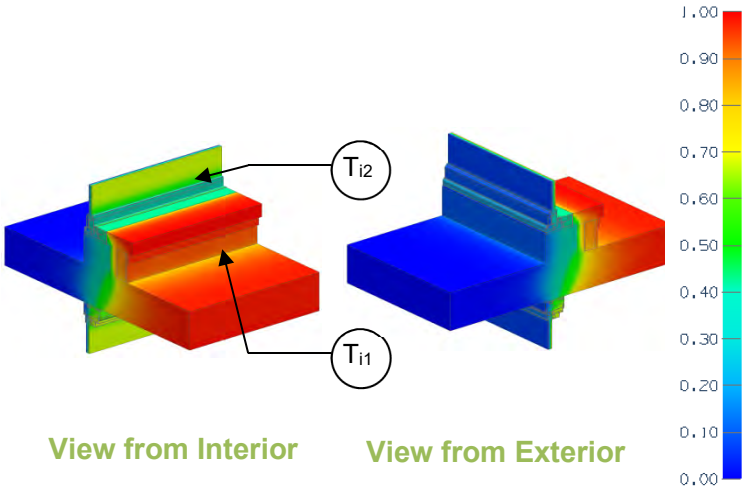

View from Interior View from Exterior

Thermal Performance Indicators

Transmittance / Resistance[1]	U, R	U- and R-values for overall assembly
Surface Temperature Index[2]	T_i	0 = exterior temperature 1 = interior temperature

[1] Projected distance from bottom of slab to top of curb
[2] Assumptions and limitations for surface temperatures identified in ASHRAE 1365-RP

Thermal Transmittance

Sliding Door with Curb

R ft²·hr·°F / Btu (m² K / W)	U Btu/ft² ·hr ·°F (W/m² K)
R-1.6 (0.29)	0.618 (3.509)

Temperature Indices

T_{i1}	0.83	Min T on interior concrete, at gypsum, at studs
T_{i2}	0.44	Min T on glass, at gaskets

Detail 9.1.2

Non- Insulated Sliding Door Sill and Window Head – Intermediate Floor Intersection

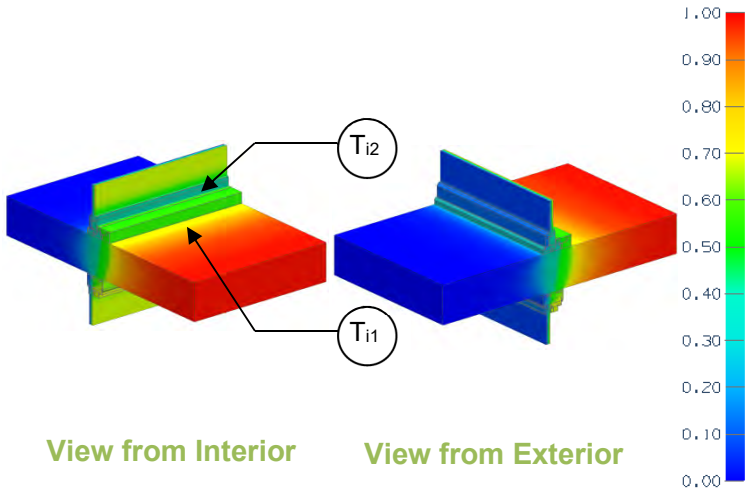

View from Interior View from Exterior

Thermal Performance Indicators

Transmittance / Resistance[1]	U, R	U- and R-value
Surface Temperature Index[2]	T_i	0 = exterior temperature 1 = interior temperature

[1] Projected distance from bottom of slab to top of curb
[2] Assumptions and limitations for surface temperatures identified in ASHRAE 1365-RP

Thermal Transmittance

Sliding Door without Curb

R ft²·hr·°F / Btu (m² K / W)	U Btu/ft² ·hr ·°F (W/m² K)
R-1.2 (0.22)	0.807 (4.59)

Temperature Indices

T_{i1}	0.58	Min T on interior concrete, at frame
T_{i2}	0.48	Min T on glass, at gaskets

Detail 9.1.3

Interior Insulated Concrete Curb – Window-Wall and Intermediate Floor Intersection

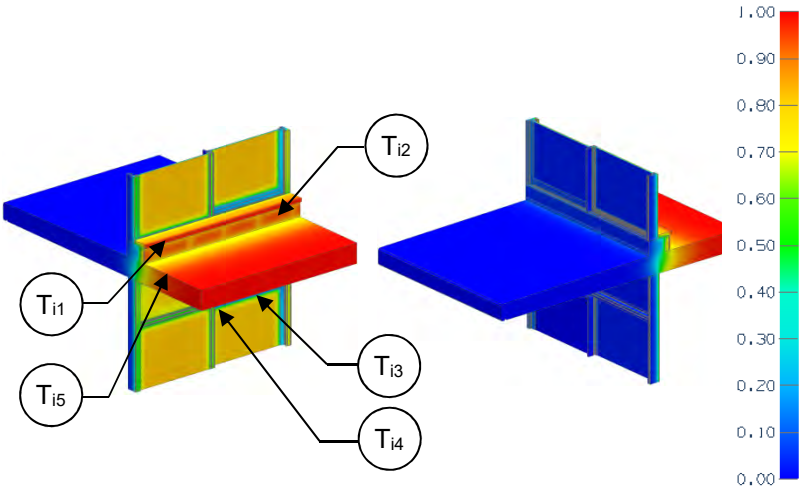

View from Interior View from Exterior

Thermal Performance Indicators

Transmittance without Anomaly	U_g	U-value for glazed sliding door, including framing
Transmittance / Resistance	U_s, R_s, U_t, R_t	U and R-values for s = balcony slab + curb only t = combined glazing + slab
Surface Temperature Index[1]	T_i	0 = exterior temperature 1 = interior temperature
Linear Transmittance	ψ	Incremental increase in transmittance per linear length of slab

[1]Assumptions and limitations for surface temperatures identified in ASHRAE 1365-RP

Nominal (1D) vs. Assembly Performance Indicators

Base Assembly – Glazed Door

$U_{centre\ of\ glass}$ Btu/ft^2 ·hr ·°F (W/m^2 K)	U_g Btu/ft^2 ·hr ·°F (W/m^2 K)
0.321 (1.82)	0.486 (2.76)

Slab Linear Transmittance

Curb Insulation 1D R-Value (RSI)	R_t ft^2·hr·°F / Btu (m^2 K / W)	U_t Btu/ft^2 ·hr ·°F (W/m^2 K)	ψ[2] Btu/ft ·hr·°F (W/m K)
R-10 (1.76)	R-1.8 (0.32)	0.545 (3.09)	0.974 (1.686)

Balcony Only

R_s ft^2·hr·°F / Btu (m^2 K / W)	U_s Btu/ft^2 ·hr ·°F (W/m^2 K)
R-1.2 (0.21)	0.832 (4.72)

[2]Transmittance not based on an opaque wall clear field value. See Part 1 Dealing with Floor to Floor Glazing.

Temperature Indices

Ti_1	0.50	Min T on concrete, between studs by wood block by fixed window
Ti_2	0.67	Max T on concrete, between studs by sliding door
Ti_3	0.16	Min T on window frame, middle of track at top of door (below slab)
Ti_4	0.15	Min T on window glass, top middle corner of door glazing (below slab)
Ti_5	0.50	Min T on slab, along spandrel head, on fixed window side

Detail 9.1.4

Exterior Insulated Concrete Curb at Sliding Door Sill and Head-Intermediate Floor Intersection

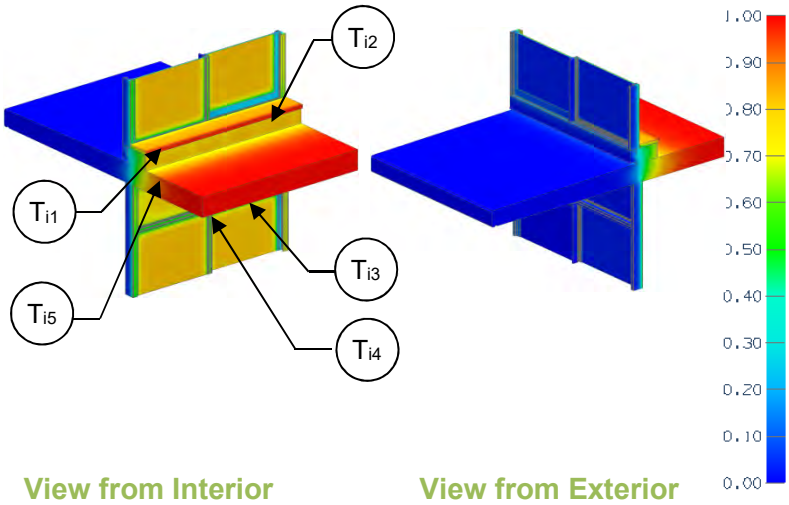

Thermal Performance Indicators

Transmittance without Anomaly	U_g	U-value for glazed sliding door, including framing
Transmittance / Resistance	U_s, R_s, U_t, R_t	U and R-values for s = balcony slab + curb only t = combined glazing + slab
Surface Temperature Index[1]	T_i	0 = exterior temperature 1 = interior temperature
Linear Transmittance	ψ	Incremental increase in transmittance per linear length of slab

[1]Assumptions and limitations for surface temperatures identified in ASHRAE 1365-RP

Nominal (1D) vs. Assembly Performance Indicators

Base Assembly – Glazed Door

$U_{centre\ of\ glass}$ Btu/ft^2 ·hr ·°F (W/m^2 K)	U_g Btu/ft^2 ·hr ·°F (W/m^2 K)
0.321 (1.82)	0.486 (2.76)

Slab Linear Transmittance

Curb Insulation 1D R-Value (RSI)	R_t ft^2·hr·°F / Btu (m^2 K / W)	U_t Btu/ft^2 ·hr ·°F (W/m^2 K)	ψ[2] Btu/ft ·hr·°F (W/m K)
R-10 (1.76)	R-1.8 (0.19)	0.558 (3.17)	1.066 (1.844)
R-15 (2.64)	R-1.8 (0.19)	0.558 (3.17)	1.064 (1.842)

Balcony Only

R_s ft^2·hr·°F / Btu (m^2 K / W)	U_s Btu/ft^2 ·hr ·°F (W/m^2 K)
R-1.1 (0.19)	0.910 (5.17)
R-1.1 (0.19)	0.909 (5.16)

[2]Transmittance not based on an opaque wall clear field value. See Part 1 Dealing with Floor to Floor Glazing.

Temperature Indices

	R10	R15	
Ti_1	0.49	0.49	Min T on concrete, between studs by wood block by fixed window
Ti_2	0.57	0.57	Max T on concrete, between studs by sliding door
Ti_3	0.16	0.16	Min T on window frame, middle of track at top of door (below slab)
Ti_4	0.15	0.15	Min T on window glass, top middle corner of door glazing (below slab)
Ti_5	0.50	0.50	Min T on slab, along spandrel head, on fixed window side

Detail 9.1.5

Exterior Insulated Concrete Curb – Window-Wall and Recessed Intermediate Floor Intersection

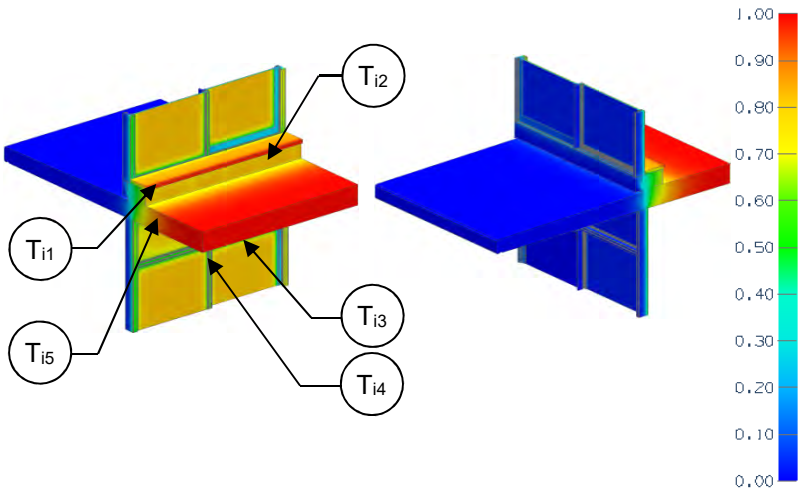

View from Interior View from Exterior

Thermal Performance Indicators

Transmittance without Anomaly	U_g	U-value for glazed sliding door, including framing
Transmittance / Resistance	U_s, R_s, U_t, R_t	U and R-values for s = balcony slab + curb only t = combined glazing + slab
Surface Temperature Index[1]	T_i	0 = exterior temperature 1 = interior temperature
Linear Transmittance	ψ	Incremental increase in transmittance per linear length of slab

[1]Assumptions and limitations for surface temperatures identified in ASHRAE 1365-RP

Nominal (1D) vs. Assembly Performance Indicators

Base Assembly – Glazed Door

$U_{centre\ of\ glass}$ Btu/ft^2 ·hr ·°F (W/m^2 K)	U_g Btu/ft^2 ·hr ·°F (W/m^2 K)
0.321 (1.82)	0.486 (2.76)

Slab Linear Transmittance

Curb Insulation 1D R-Value (RSI)	R ft^2·hr·°F / Btu (m^2 K / W)	U Btu/ft^2 ·hr ·°F (W/m^2 K)	ψ[2] Btu/ft ·hr·°F (W/m K)
R-10 (1.76)	R-1.8 (0.32)	0.556 (3.16)	1.053 (1.822)
R-15 (2.64)	R-1.8 (0.32)	0.556 (3.15)	1.050 (1.817)

Balcony Only

R_s ft^2·hr·°F / Btu (m^2 K / W)	U_s Btu/ft^2 ·hr ·°F (W/m^2 K)
R-1.1 (0.20)	0.900 (5.11)
R-1.1 (0.20)	0.897 (5.09)

[2]Transmittance not based on an opaque wall clear field value. See Part 1 Dealing with Floor to Floor Glazing

Temperature Indices

	R10	R15	
Ti_1	0.50	0.50	Min T on concrete, between studs by wood block by fixed window
Ti_2	0.58	0.58	Max T on concrete, between studs by sliding door
Ti_3	0.16	0.16	Min T on window frame, middle of track at top of door (below slab)
Ti_4	0.15	0.15	Min T on window glass, top middle corner of door glazing (below slab)
Ti_5	0.50	0.50	Min T on slab, along spandrel head, on fixed window side

Detail 9.1.6

Window Wall System with Spandrel Panels and Sliding Door - Concrete Balcony and Curb Intersection

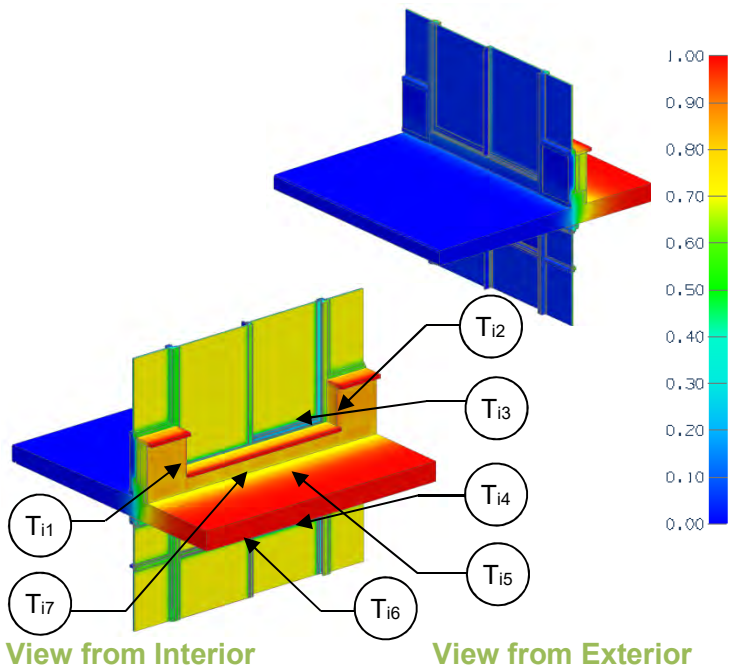

Thermal Performance Indicators

Assembly 1D (Nominal) R-Value	R_{1D}	R-3.2 (0.55 RSI) + backpan insulation
Transmittance without Anomaly	U_g	U-value for glazed sliding door, including framing
Transmittance / Resistance	U_w, R_w, U_s, R_s, U_t, R_t	U and R-values for w = spandrel wall s = balcony slab + curb only t = combined glazing + spandrel + slab
Surface Temperature Index[1]	T_i	0 = exterior temperature 1 = interior temperature
Linear Transmittance	ψ_w, ψ_s	Incremental increase in transmittance per linear length of w = slab under spandrel s = slab under door

[1]Assumptions and limitations for surface temperatures identified in ASHRAE 1365-RP

Nominal (1D) vs. Assembly Performance Indicators

Base Assembly – Spandrel Section without Slab

Backpan Insulation 1D R-Value (RSI)	R_{1D} ft²·hr·°F / Btu (m² K / W)	R_w ft²·hr·°F / Btu (m² K / W)	U_w Btu/ft² ·hr ·°F (W/m² K)
R-8.4 (1.48)	R-11.6 (2.03)	R-6.3 (1.11)	0.158 (0.90)
R-12.6 (2.25)	R-15.7 (2.77)	R-7.1 (1.26)	0.140 (0.80)

Base Assembly – Glazed Door

$U_{centre\ of\ glass}$ Btu/ft² ·hr ·°F (W/m² K)	U_g Btu/ft² ·hr ·°F (W/m² K)
0.321 (1.82)	0.486 (2.76)

Balcony Linear Transmittance

Backpan Insulation 1D R-Value (RSI)	R_t ft²·hr·°F / Btu (m² K / W)	U_t Btu/ft² ·hr ·°F (W/m² K)	ψ_s[2] Btu/ft ·hr·°F (W/m K)
R-8.4 (1.48)	R-1.9 (0.34)	0.519 (2.95)	0.645 (1.116)
R-12.6 (2.25)	R-1.9 (0.34)	0.519 (2.95)	0.645 (1.116)

Balcony Only

R_s ft²·hr·°F / Btu (m² K / W)	U_s Btu/ft² ·hr ·°F (W/m² K)
R-1.8 (0.32)	0.551 (3.13)
R-1.8 (0.32)	0.551 (3.13)

[2]Transmittance not based on an opaque wall clear field value. See Part 1 Dealing with Floor to Floor Glazing.

Temperature Indices

	R8.4	R12.6	
T_{i1}	0.47	0.53	Min T on backpan, along edge of backpan
T_{i2}	0.65	0.66	Max T on backpan, at centre of backpan
T_{i3}	0.24	0.24	Min T on upper frame, along sill of sliding door frame
T_{i4}	0.15	0.15	Min T on lower frame, along head of sliding door base frame
T_{i5}	0.21	0.21	Min T on upper glazing, at bottom corner of sliding door glazing near fixed frame
T_{i6}	0.20	0.20	Min T on lower glazing, at corner of sliding door frame near fixed frame
T_{i7}	0.52	0.52	Min T on slab, along head of lower sliding door

Detail 9.1.7

Window-wall with Sliding Door and Insulated Spandrel Section – Concrete Intermediate Floor Intersection without Concrete Curb for Alternative Balcony Slab Connections

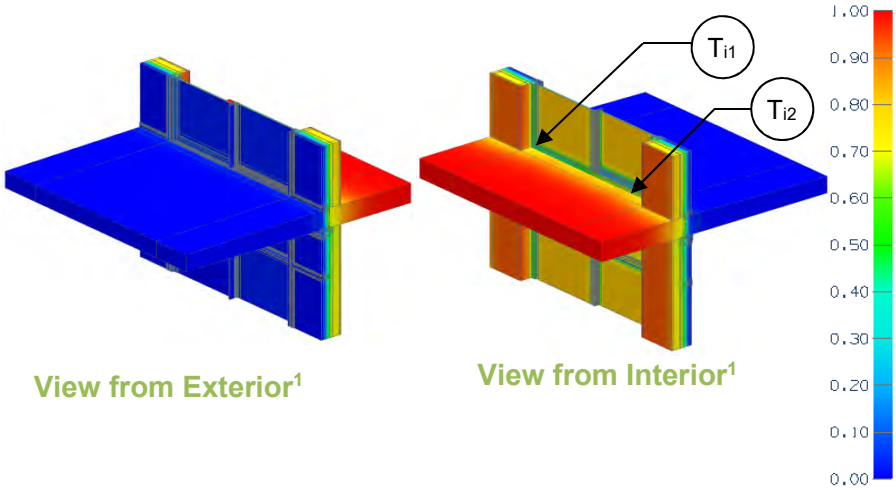

View from Exterior[1]

View from Interior[1]

Thermal Performance Indicators

Transmittance / Resistance	U_w, R_w	Spandrel Wall Section U-value and "Effective" R-value
	U_g, R_g	Glazed Sliding Door U-value and "Effective" R-value
	U_s, R_s	Floor Slab U-value and "Effective" R-value

[1]Thermal image shown is for the thermally broken slab with the Schöck Isokorb CM20 (Scenario A).

Scenarios

Scenario	Description
A	Thermally broken slab with 3" (80 mm) thick Schöck Isokorb CM20
B	Thermally Broken Slab with 1.5" (40 mm) Intermittent Slab Insulation (880mm insulation @1380)
C	Continuous Slab

Nominal (1D) vs. Assembly Performance Indicators

Scenario	U_w Btu/ft^2 ·hr ·°F (W/m^2 K)	R_w ft^2·hr·°F / Btu (m^2 K / W)	U_g Btu/ft^2 ·hr ·°F (W/m^2 K)	R_g ft^2·hr·°F / Btu (m^2 K / W)	U_s Btu/ft^2 ·hr ·°F (W/m^2 K)	R_s ft^2·hr·°F / Btu (m^2 K / W)
A	0.140 (0.80)	R-7.1 (1.25)	0.476 (2.70)	R-2.1 (0.37)	0.213 (1.21)	R-4.7 (0.83)
B	0.140 (0.80)	R-7.1 (1.25)	0.476 (2.70)	R-2.1 (0.37)	0.680 (3.86)	R-1.5 (0.26)
C	0.140 (0.80)	R-7.1 (1.25)	0.476 (2.70)	R-2.1 (0.37)	0.859 (4.88)	R-1.2 (0.20)

Temperature Indices

	A	B	C	
T_{i1}	0.64	0.50	0.45	Min T on concrete floor, at bottom corner of door
T_{i2}	0.18	0.18	0.18	Min T on sliding door frame

Detail 9.1.8

Window Wall System with Spandrel Panels and Sliding Door - Thermally Broken Concrete Balcony and Curb Intersection

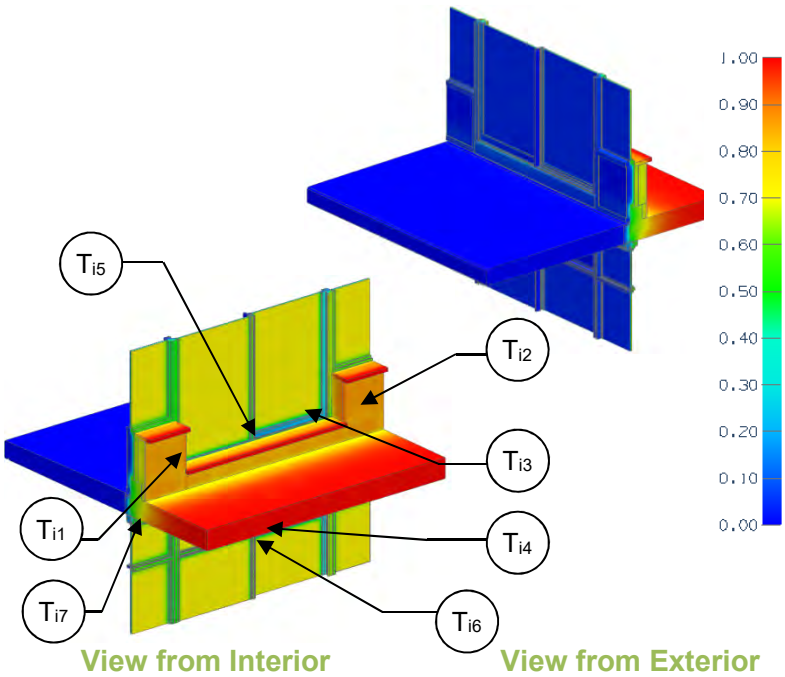

Thermal Performance Indicators

Assembly 1D (Nominal) R-Value	R_{1D}	R-3.2 (0.55 RSI) + backpan insulation
Transmittance without Anomaly	U_g	U-value for glazed sliding door, including framing
Transmittance / Resistance	U_w, R_w, U_s, R_s, U_t, R_t	U and R-values for w = spandrel wall s = balcony slab + curb only t = combined glazing + spandrel + slab
Surface Temperature Index[1]	T_i	0 = exterior temperature 1 = interior temperature
Linear Transmittance	ψ_w, ψ_s	Incremental increase in transmittance per linear length of w = slab under spandrel s = slab under door

[1]Assumptions and limitations for surface temperatures identified in ASHRAE 1365-RP

Nominal (1D) vs. Assembly Performance Indicators

Base Assembly – Spandrel Section without Slab

Backpan Insulation 1D R-Value (RSI)	R_{1D} ft²·hr·°F / Btu (m² K / W)	R_w ft²·hr·°F / Btu (m² K / W)	U_w Btu/ft² ·hr ·°F (W/m² K)
R-8.4 (1.48)	R-11.6 (2.03)	R-6.3 (1.11)	0.158 (0.90)
R-12.6 (2.25)	R-15.7 (2.77)	R-7.1 (1.26)	0.140 (0.80)

Base Assembly – Glazed Door

$U_{centre\ of\ glass}$ Btu/ft² ·hr ·°F (W/m² K)	U_g Btu/ft² ·hr ·°F (W/m² K)
0.321 (1.82)	0.486 (2.76)

Balcony Linear Transmittance

Backpan Insulation 1D R-Value (RSI)	R_t ft²·hr·°F / Btu (m² K / W)	U_t Btu/ft² ·hr ·°F (W/m² K)	ψ_s[2] Btu/ft ·hr·°F (W/m K)
R-8.4 (1.48)	R-2.0 (0.35)	0.503 (2.86)	0.492 (0.852)
R-12.6 (2.25)	R-2.0 (0.35)	0.503 (2.85)	0.494 (0.856)

Balcony Only

R_s ft²·hr·°F / Btu (m² K / W)	U_s Btu/ft² ·hr ·°F (W/m² K)
R-2.4 (0.42)	0.421 (2.39)
R-2.4 (0.42)	0.422 (2.40)

[2]Transmittance not based on an opaque wall clear field value. See Part 1 Dealing with Floor to Floor Glazing.

Temperature Indices

	R8.4	R12.6	
Ti_1	0.50	0.50	Min T on backpan, along edge of backpan
Ti_2	0.64	0.69	Max T on backpan, at centre of backpan
Ti_3	0.24	0.24	Min T on upper frame, along sill of sliding door frame
Ti_4	0.15	0.15	Min T on lower frame, along head of sliding door base frame
Ti_5	0.20	0.20	Min T on upper glazing, at bottom corner of sliding door near fixed frame
Ti_6	0.20	0.20	Min T on lower glazing, at corner of sliding door frame near fixed frame
Ti_7	0.60	0.60	Min T on slab, along head of lower sliding door

Detail 9.1.9

Window Wall System with Spandrel Panels - Concrete Balcony and Bypass Intersection

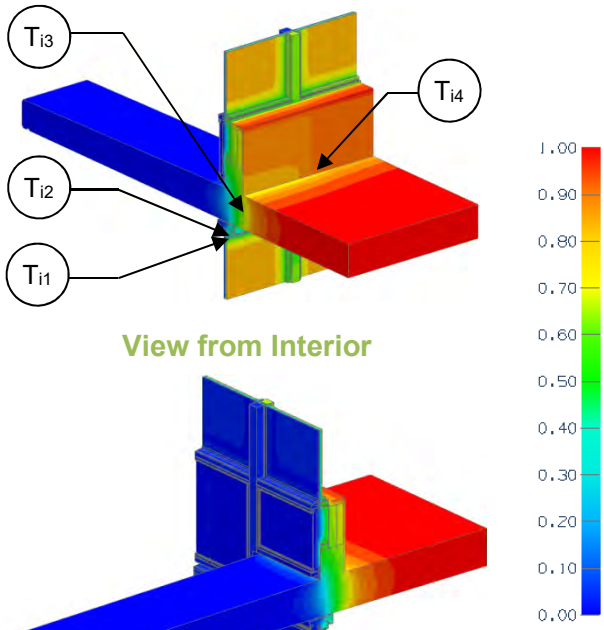

View from Interior

View from Exterior

Thermal Performance Indicators

Assembly 1D (Nominal) R-Value	R_{1D}	R-3.2 (0.55 RSI) + backpan insulation
Transmittance / Resistance without Anomaly	U_o, R_o	"clear wall" U- and R-value spandrel section of window wall without slab
Transmittance / Resistance	U_s, R_s, U_i, R_i, U_t, R_t	U and R values for s = window wall spandrel + bypass i = window wall spandrel + balcony t = combined window wall spandrel + bypass + balcony + intersection
Surface Temperature Index[1]	T_i	0 = exterior temperature 1 = interior temperature
Linear Transmittance	ψ_s, ψ_i	Incremental increase in transmittance per linear length of s = bypass i = balcony
Point Transmittance	χ	Incremental increase in transmittance for inner wall and slab intersection

[1]Assumptions and limitations for surface temperatures identified in ASHRAE 1365-RP

Nominal (1D) vs. Assembly Performance Indicators

Base Assembly – Spandrel Section without Slab

Backpan Insulation 1D R-Value (RSI)	R_{1D} ft²·hr·°F / Btu (m² K / W)	R_o ft²·hr·°F / Btu (m² K / W)	U_o Btu/ft² ·hr ·°F (W/m² K)
R-8.4 (1.48)	R-11.6 (2.03)	R-6.3 (1.11)	0.158 (0.90)
R-12.6 (2.25)	R-15.7 (2.77)	R-7.1 (1.26)	0.140 (0.80)

Bypass Linear Transmittance

R_s ft²·hr·°F / Btu (m² K / W)	U_s Btu/ft² ·hr ·°F (W/m² K)	ψ_s Btu/ft ·hr·°F (W/m K)
R-3.6 (0.64)	0.275 (1.56)	0.350 (0.606)
R-3.8 (0.68)	0.260 (1.48)	0.359 (0.622)

Balcony Linear Transmittance

Backpan Insulation 1D R-Value (RSI)	R_i ft²·hr·°F / Btu (m² K / W)	U_i Btu/ft² ·hr ·°F (W/m² K)	ψ_i Btu/ft ·hr·°F (W/m K)
R-8.4 (1.48)	R-2.7 (048)	0.368 (2.09)	0.629 (1.09)
R-12.6 (2.25)	R-2.8 (0.49)	0.357 (2.03)	0.651 (1.13)

Intersection Point Transmittance

R_t ft²·hr·°F / Btu (m² K / W)	U_t Btu/ft² ·hr ·°F (W/m² K)	χ Btu/hr·°F (W/K)
R-3.1 (0.54)	0.326 (1.85)	0.086 (0.046)
R-3.2 (0.56)	0.313 (1.78)	0.089 (0.047)

Temperature Indices

	R6.4	R12.8	
T_{i1}	0.44	0.44	Min T on glazing, lower glazing along frame header on balcony side away from intersection
T_{i2}	0.41	0.41	Min T on frame, lower frame edge along slab on balcony side away from intersection
T_{i3}	0.47	0.47	Min T on slab, along lower frame edge on balcony side away from intersection
T_{i4}	0.55	0.57	Min T on backpan, on bottom corner on non-balcony side at intersection

Detail 9.1.10

Interior Insulated 3 5/8" x 1 5/8" Steel Stud (16" o.c.) Wall Assembly - Door Sill with Exterior Slab Insulation

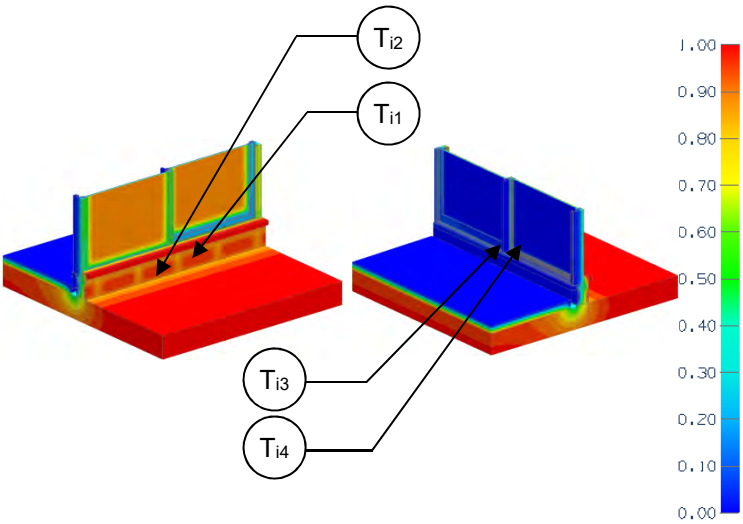

View from Interior View from Exterior

Thermal Performance Indicators

Assembly 1D (Nominal) R-Value	R_{1D}	R-1.9 (0.33 RSI) + exterior deck insulation
Transmittance / Resistance without Anomaly	U_r, R_r, U_g	"clear field" U- and R-values for two base assemblies: r = roof deck g = glazed sliding door
Transmittance / Resistance	U, R	U- and R-values for overall assembly
Surface Temperature Index[1]	T_i	0 = exterior temperature 1 = interior temperature
Linear Transmittance	ψ	Incremental increase in transmittance per linear length of door sill

[1]Assumptions and limitations for surface temperatures identified in ASHRAE 1365-RP

Nominal (1D) vs. Assembly Performance Indicators

Base Assembly – Roof Deck

Slab Exterior Insulation 1D R-Value (RSI)	R_{1D} ft²·hr·°F / Btu (m² K / W)	R_r ft²·hr·°F / Btu (m² K / W)	U_r Btu/ft² ·hr ·°F (W/m² K)
R-20 (3.52)	R-21.9 (3.86)	R-21.9 (3.86)	0.046 (0.26)

Base Assembly – Glazed Door

$U_{center\ of\ glazing}$ Btu/ft² ·hr ·°F (W/m² K)	U_g Btu/ft² ·hr ·°F (W/m² K)
0.321 (1.82)	0.489 (2.78)

Door Sill Linear Transmittance

R ft²·hr·°F / Btu (m² K / W)	U Btu/ft² ·hr ·°F (W/m² K)	ψ Btu/ft ·hr·°F (W/m K)
R-3.0 (0.54)	0.329 (1.87)	0.395 (0.684)

Temperature Indices

T_{i1}	0.06	Min T on sheathing between studs, mid height
T_{i2}	0.55	Max T on sheathing along slab
T_{i3}	0.22	Min T on window frame, at bottom middle corner of door track
T_{i4}	0.20	Min T on window glass, bottom middle corner of door

Detail 9.1.11

Exterior and Interior Insulated 3 5/8" x 1 5/8" Steel Stud (16" o.c.) Wall Assembly - Door Sill with Exterior Slab Insulation

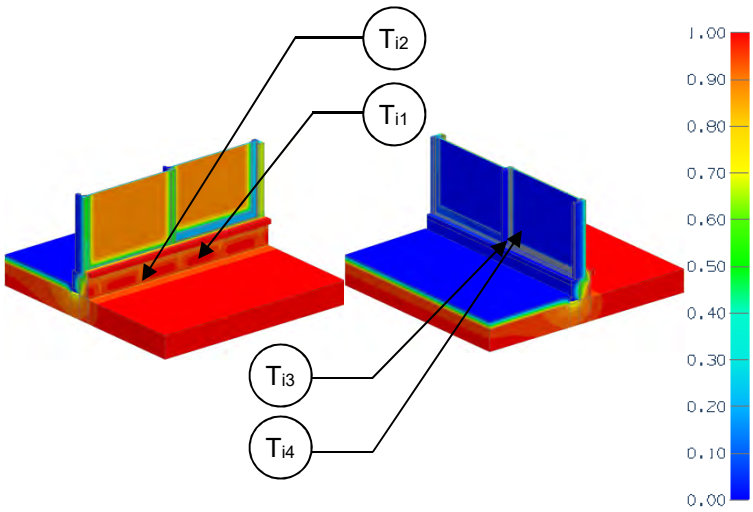

View from Interior View from Exterior

Thermal Performance Indicators

Assembly 1D (Nominal) R-Value	R_{1D}	R-1.9 (0.33 RSI) + exterior deck insulation
Transmittance / Resistance without Anomaly	U_r, R_r, U_g	"clear field" U- and R-values for: r = roof deck g = glazed sliding door
Transmittance / Resistance	U, R	U- and R-values for overall assembly
Surface Temperature Index[1]	T_i	0 = exterior temperature 1 = interior temperature
Linear Transmittance	ψ	Incremental increase in transmittance per linear length of door sill

[1]Assumptions and limitations for surface temperatures identified in ASHRAE 1365-RP

Nominal (1D) vs. Assembly Performance Indicators

Base Assembly – Roof Deck

Slab Exterior Insulation 1D R-Value (RSI)	R_{1Dr} ft²·hr·°F / Btu (m² K / W)	R_r ft²·hr·°F / Btu (m² K / W)	U_r Btu/ft² ·hr ·°F (W/m² K)
R-20 (3.52)	R-21.9 (3.86)	R-21.9 (3.86)	0.046 (0.26)

Base Assembly – Door

$U_{center\ of\ glazing}$ Btu/ft² ·hr ·°F (W/m² K)	U_g Btu/ft² ·hr ·°F (W/m² K)
0.321 (1.82)	0.489 (2.78)

Door Sill Linear Transmittance

Sill Exterior Insulation 1D R-Value (RSI)	R ft²·hr·°F / Btu (m² K / W)	U Btu/ft² ·hr ·°F (W/m² K)	ψ Btu/ft ·hr·°F (W/m K)
R-10 (1.76)	R-3.6 (0.63)	0.279 (1.58)	0.104 (0.180)
R-15 (2.64)	R-3.6 (0.63)	0.278 (1.58)	0.097 (0.169)

Temperature Indices

	R10	R15	
T_{i1}	0.47	0.49	Min T on sheathing between studs, mid height
T_{i2}	0.75	0.75	Max T on sheathing at studs
T_{i3}	0.23	0.23	Min T on window frame, at bottom middle corner of door track
T_{i4}	0.20	0.20	Min T on window glass, bottom middle corner of door

Detail 9.1.12

Window Wall System with Spandrel Panels and Sliding Door - Schöck Isokorb K65-V8 Thermal Break at Concrete Balcony and Curb Intersection

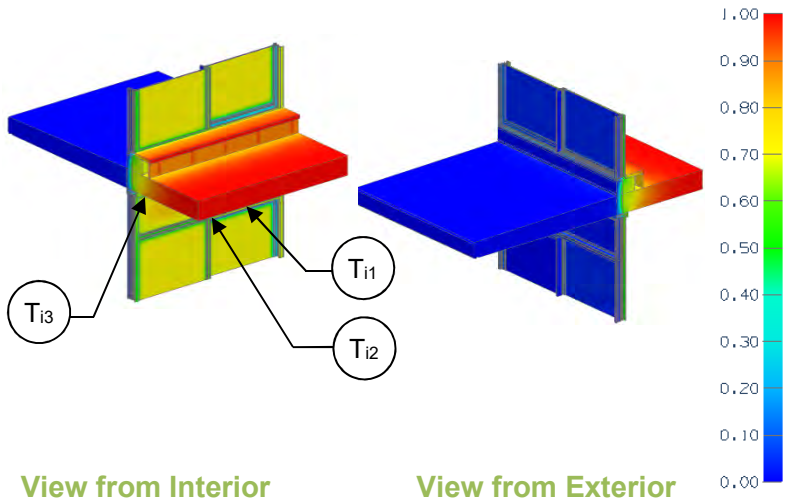

View from Interior View from Exterior

Thermal Performance Indicators

Transmittance without Anomaly	U_g	U-value for glazed sliding door, including framing
Transmittance / Resistance	U_s, R_s, U_t, R_t	U and R-values for s = balcony slab + curb t = combined glazing + slab
Surface Temperature Index[1]	T_i	0 = exterior temperature 1 = interior temperature
Linear Transmittance	ψ	Incremental increase in transmittance per linear length of slab

[1]Assumptions and limitations for surface temperatures identified in ASHRAE 1365-RP

Scenarios

Scenario	Description
A	Window wall thermal break located at concrete slab, un-insulated glazing frame
B	Window wall thermal break located at Isokorb module, insulated glazing frame

Assembly Performance Indicators

Base Assembly – Glazed Door

Scenario	$U_{centre\ of\ glass}$ Btu/ft^2 ·hr ·°F (W/m^2 K)	U_g Btu/ft^2 ·hr ·°F (W/m^2 K)
A	0.321 (1.82)	0.532 (3.02)
B	0.321 (1.82)	0.502 (2.85)

Slab Linear Transmittance

Scenario	R_t ft^2·hr·°F / Btu (m^2 K / W)	U_t Btu/ft^2 ·hr ·°F (W/m^2 K)	ψ[2] Btu/ft ·hr·°F (W/m K)
A	R-2.0 (0.35)	0.502 (2.85)	0.426 (0.738)
B	R-2.2 (0.38)	0.465 (2.64)	0.343 (0.594)

Balcony Only

R_s ft^2·hr·°F / Btu (m^2 K / W)	U_s Btu/ft^2 ·hr ·°F (W/m^2 K)
R-2.8 (0.50)	0.355 (2.02)
R-3.5 (0.62)	0.286 (1.62)

[2]Transmittance not based on an opaque wall clear field value. See Part 1 Dealing with Floor to Floor Glazing.

Temperature Indices

	A	B	
Ti_1	0.19	0.19	Min T on window frame, middle of track at top of door (below slab)
Ti_2	0.51	0.51	Min T on window glass, top middle corner of door glazing (below slab)
Ti_3	0.67	0.78	Min T on slab, along deflection header, on fixed window side

Detail 9.1.13

Window Wall System with Spandrel Panels and Sliding Door - Schöck Isokorb K10-V6 Thermal Break at Concrete Balcony and Curb Intersection

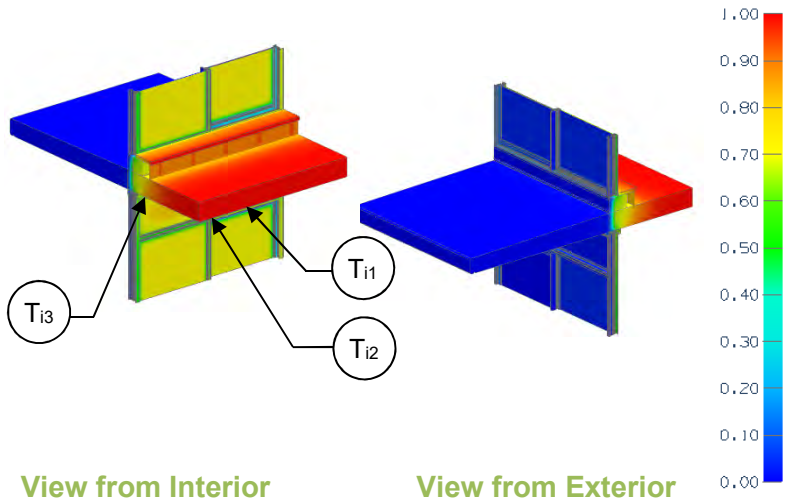

View from Interior View from Exterior

Thermal Performance Indicators

Transmittance without Anomaly	U_g	U-value for glazed sliding door, including framing
Transmittance / Resistance	U_s, R_s, U_t, R_t	U and R-values for s = balcony slab + curb t = combined glazing + slab
Surface Temperature Index[1]	T_i	0 = exterior temperature 1 = interior temperature
Linear Transmittance	ψ	Incremental increase in transmittance per linear length of slab

[1]Assumptions and limitations for surface temperatures identified in ASHRAE 1365-RP

Scenarios

Scenario	Description
A	Window wall thermal break located at concrete slab, un-insulated glazing frame
B	Window wall thermal break located at Isokorb module, insulated glazing frame

Assembly Performance Indicators

Base Assembly – Glazed Door

Scenario	$U_{centre\ of\ glass}$ Btu/ft^2 ·hr ·°F (W/m^2 K)	U_g Btu/ft^2 ·hr ·°F (W/m^2 K)
A	0.321 (1.82)	0.532 (3.02)
B	0.321 (1.82)	0.502 (2.85)

Slab Linear Transmittance

Scenario	R_t ft^2·hr·°F / Btu (m^2 K / W)	U_t Btu/ft^2 ·hr ·°F (W/m^2 K)	ψ[2] Btu/ft ·hr·°F (W/m K)
A	R-2.0 (0.36)	0.495 (2.81)	0.379 (0.656)
B	R-2.2 (0.39)	0.456 (2.59)	0.283 (0.490)

Balcony Only

R_s ft^2·hr·°F / Btu (m^2 K / W)	U_s Btu/ft^2 ·hr ·°F (W/m^2 K)
R-3.2 (0.56)	0.316 (1.79)
R-4.2 (0.75)	0.236 (1.34)

[2]Transmittance not based on an opaque wall clear field value. See Part 1 Dealing with Floor to Floor Glazing.

Temperature Indices

	A	B	
Ti_1	0.19	0.19	Min T on window frame, middle of track at top of door (below slab)
Ti_2	0.51	0.51	Min T on window glass, top middle corner of door glazing (below slab)
Ti_3	0.68	0.80	Min T on slab, along deflection header, on fixed window side

Detail 9.1.14

Window Wall System with Spandrel Panels and Sliding Door - Schöck Isokorb KXT65-V8 Thermal Break at Concrete Balcony and Curb Intersection

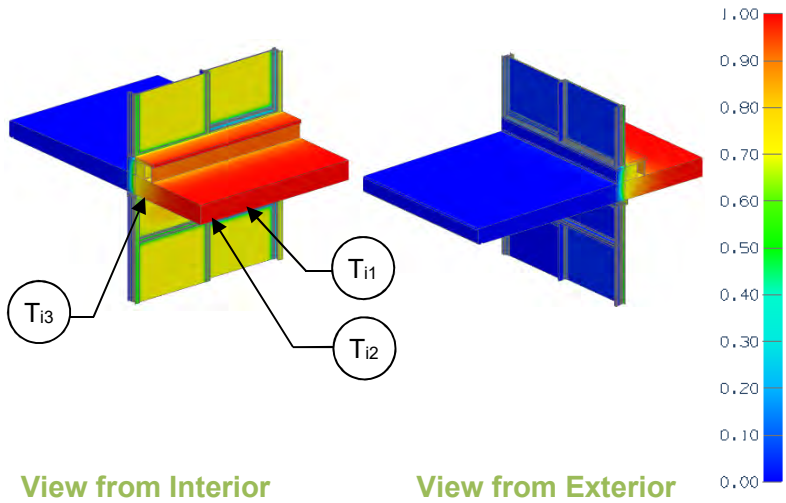

View from Interior View from Exterior

Thermal Performance Indicators

Transmittance without Anomaly	U_g	U-value for glazed sliding door, including framing
Transmittance / Resistance	U_s, R_s, U_t, R_t	U and R-values for s = balcony slab + curb t = combined glazing + slab
Surface Temperature Index[1]	T_i	0 = exterior temperature 1 = interior temperature
Linear Transmittance	ψ	Incremental increase in transmittance per linear length of slab

[1]Assumptions and limitations for surface temperatures identified in ASHRAE 1365-RP

Scenarios

Scenario	Description
A	Window wall thermal break located at concrete slab, un-insulated glazing frame
B	Window wall thermal break located at Isokorb module, insulated glazing frame

Assembly Performance Indicators

Base Assembly – Glazed Door

Scenario	$U_{centre\ of\ glass}$ Btu/ft^2 ·hr ·°F (W/m^2 K)	U_g Btu/ft^2 ·hr ·°F (W/m^2 K)
A	0.321 (1.82)	0.532 (3.02)
B	0.321 (1.82)	0.502 (2.85)

Slab Linear Transmittance

Scenario	R_t ft^2·hr·°F / Btu (m^2 K / W)	U_t Btu/ft^2 ·hr ·°F (W/m^2 K)	ψ[2] Btu/ft ·hr·°F (W/m K)
A	R-2.1 (0.36)	0.485 (2.75)	0.306 (0.530)
B	R-2.2 (0.39)	0.456 (2.59)	0.283 (0.490)

Balcony Only

R_s ft^2·hr·°F / Btu (m^2 K / W)	U_s Btu/ft^2 ·hr ·°F (W/m^2 K)
R-3.9 (0.69)	0.255 (1.45)
R-4.2 (0.75)	0.236 (1.34)

[2]Transmittance not based on an opaque wall clear field value. See Part 1 Dealing with Floor to Floor Glazing.

Temperature Indices

	A	B	
Ti_1	0.19	0.19	Min T on window frame, middle of track at top of door (below slab)
Ti_2	0.51	0.51	Min T on window glass, top middle corner of door glazing (below slab)
Ti_3	0.71	0.79	Min T on slab, along deflection header, on fixed window side

Detail 9.1.15

Window Wall System with Spandrel Panels and Sliding Door - Schöck Isokorb KXT15-V6 Thermal Break at Concrete Balcony and Curb Intersection

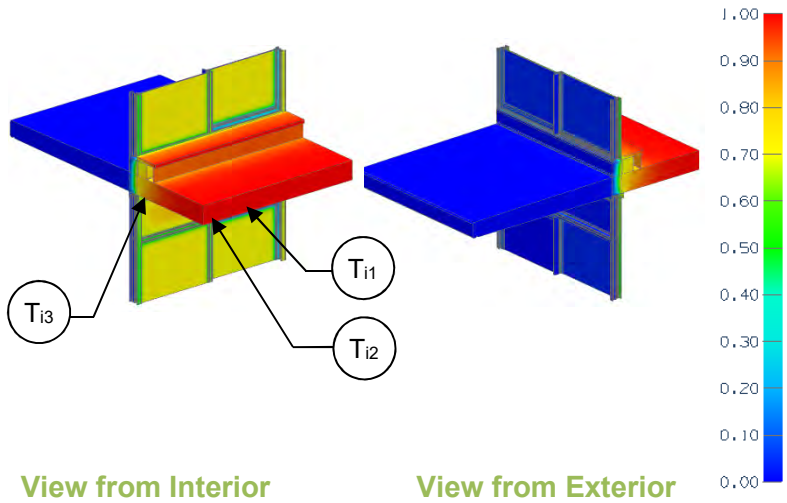

View from Interior View from Exterior

Thermal Performance Indicators

Transmittance without Anomaly	U_g	U-value for glazed sliding door, including framing
Transmittance / Resistance	U_s, R_s, U_t, R_t	U and R-values for s = balcony slab + curb t = combined glazing + slab
Surface Temperature Index[1]	T_i	0 = exterior temperature 1 = interior temperature
Linear Transmittance	ψ	Incremental increase in transmittance per linear length of slab

[1]Assumptions and limitations for surface temperatures identified in ASHRAE 1365-RP

Scenarios

Scenario	Description
A	Window wall thermal break located at concrete slab, un-insulated glazing frame
B	Window wall thermal break located at Isokorb module, insulated glazing frame

Assembly Performance Indicators

Base Assembly – Glazed Door

Scenario	$U_{centre\ of\ glass}$ Btu/ft^2 ·hr ·°F (W/m^2 K)	U_g Btu/ft^2 ·hr ·°F (W/m^2 K)
A	0.321 (1.82)	0.532 (3.02)
B	0.321 (1.82)	0.502 (2.85)

Slab Linear Transmittance

Scenario	R_t ft^2·hr·°F / Btu (m^2 K / W)	U_t Btu/ft^2 ·hr ·°F (W/m^2 K)	ψ[2] Btu/ft ·hr·°F (W/m K)
A	R-2.1 (0.37)	0.478 (2.71)	0.256 (0.442)
B	R-2.2 (0.39)	0.448 (2.55)	0.226 (0.392)

Balcony Only

R_s ft^2·hr·°F / Btu (m^2 K / W)	U_s Btu/ft^2 ·hr ·°F (W/m^2 K)
R-4.7 (0.83)	0.213 (1.21)
R-5.3 (0.93)	0.189 (1.07)

[2]Transmittance not based on an opaque wall clear field value. See Part 1 Dealing with Floor to Floor Glazing.

Temperature Indices

	A	B	
Ti_1	0.19	0.19	Min T on window frame, middle of track at top of door (below slab)
Ti_2	0.51	0.51	Min T on window glass, top middle corner of door glazing (below slab)
Ti_3	0.73	0.81	Min T on slab, along deflection header, on fixed window side

Detail 9.1.16

Exterior Insulated 2''x6'' Steel Stud (16'' o.c.) Wall Assembly with FRP Vertical Brackets and Rail System Supporting Metal Cladding and Sliding Door – Intermittently Attached Balcony and Sliding Door Intersection

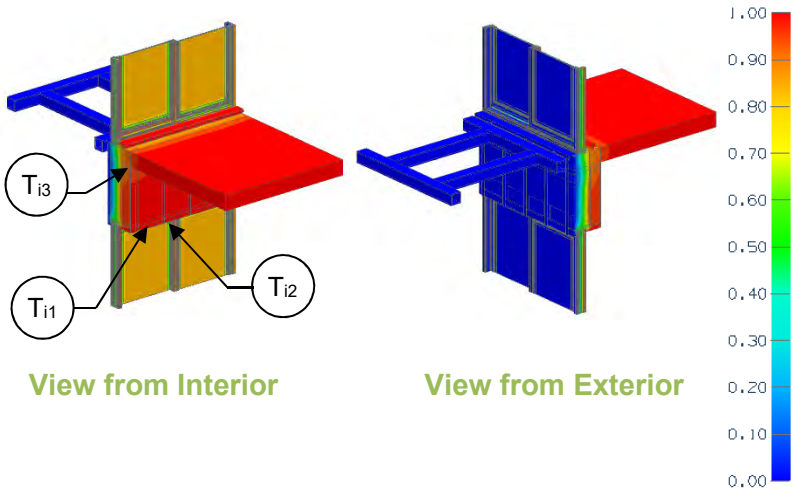

View from Interior View from Exterior

Thermal Performance Indicators

Assembly 1D (Nominal) R-Value	R_{1D}	R-3.2 (0.56 RSI) + exterior insulation
Transmittance without Anomaly	U_g	U-value for glazed sliding door, including framing
Transmittance / Resistance	U_t, R_t	U and R-values for t = combined glazing + slab
Surface Temperature Index[1]	T_i	0 = exterior temperature 1 = interior temperature
Linear Transmittance	ψ	Incremental increase in transmittance per linear length
Point Transmittance	χ	Incremental increase in transmittance for knife edge penetration

[1]Assumptions and limitations for surface temperatures identified in ASHRAE 1365-RP

Nominal (1D) vs. Assembly Performance Indicators

Base Assembly – Wall

Exterior Insulation 1D R-Value (RSI)	R_{1D} ft²·hr·°F / Btu (m² K / W)	R_o ft²·hr·°F / Btu (m² K / W)	U_o Btu/ft² ·hr ·°F (W/m² K)
R-42 (7.40)	R-45.2 (7.96)	R-40.0 (7.04)	0.025 (0.14)

Base Assembly – Glazed Door

$U_{centre\ of\ glass}$ Btu/ft² ·hr ·°F (W/m² K)	U_g Btu/ft² ·hr ·°F (W/m² K)
0.269 (1.53)	0.329 (1.87)

Balcony Transition Transmittance

Exterior Insulation 1D R-Value (RSI)	R_t ft²·hr·°F / Btu (m² K / W)	U_t Btu/ft² ·hr ·°F (W/m² K)	ψ_{Door_Head} Btu/ft ·hr ·°F (W/m K)	ψ_{Door_Sill} Btu/ft ·hr ·°F (W/m K)	$\chi_{KnifeEdge}$ Btu/hr °F (W/K)
R-42 (7.40)	R-3.8 (0.68)	0.260 (1.48)	0.044 (0.076)	0.024 (0.042)	0.514 (0.271)

Temperature Indices

	A	
Ti_1	0.48	Min T on window frame, middle of track at top of fixed window (below slab)
Ti_2	0.55	Min T on window glass, top middle corner of door glazing (below slab)
Ti_3	0.79	Min T on sheathing below slab, beside studs along track

Detail 9.1.17

Exterior and Interior Insulated 2''x6'' Steel Stud (16'' o.c.) Wall Assembly with FRP Vertical Brackets and Rail System Supporting Metal Cladding with R-19 Batt in Stud Cavity and Sliding Door – Intermittently Attached Balcony and Sliding Door Intersection

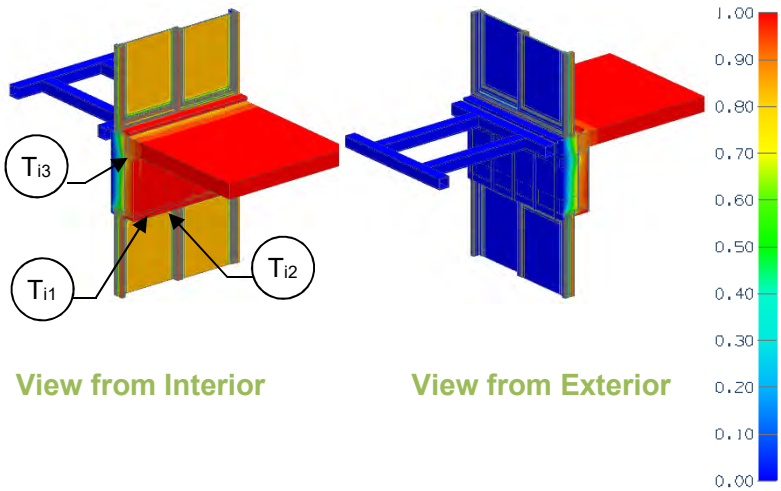

View from Interior View from Exterior

Thermal Performance Indicators

Assembly 1D (Nominal) R-Value	R_{1D}	R-21.3 (3.75 RSI) + exterior insulation
Transmittance without Anomaly	U_g	U-value for glazed sliding door, including framing
Transmittance / Resistance	U_t, R_t	U and R-values for t = combined glazing + slab
Surface Temperature Index[1]	T_i	0 = exterior temperature 1 = interior temperature
Linear Transmittance	ψ	Incremental increase in transmittance per linear length
Point Transmittance	χ	Incremental increase in transmittance for knife edge penetration

[1]Assumptions and limitations for surface temperatures identified in ASHRAE 1365-RP

Nominal (1D) vs. Assembly Performance Indicators

Base Assembly – Wall

Exterior Insulation 1D R-Value (RSI)	R_{1D} ft²·hr·°F / Btu (m² K / W)	R_o ft²·hr·°F / Btu (m² K / W)	U_o Btu/ft² ·hr ·°F (W/m² K)
R-42 (7.40)	R-63.3 (11.15)	R-48.3 (8.51)	0.021 (0.12)

Base Assembly – Glazed Door

$U_{centre\ of\ glass}$ Btu/ft² ·hr ·°F (W/m² K)	U_g Btu/ft² ·hr ·°F (W/m² K)
0.269 (1.53)	0.329 (1.87)

Balcony Transition Transmittance

Exterior Insulation 1D R-Value (RSI)	R_t ft²·hr·°F / Btu (m² K / W)	U_t Btu/ft² ·hr ·°F (W/m² K)	ψ_{Door_Head} Btu/ft ·hr ·°F (W/m K)	ψ_{Door_Sill} Btu/ft ·hr ·°F (W/m K)	$\chi_{KnifeEdge}$ Btu/hr °F (W/K)
R-42 (7.40)	R-3.9 (0.68)	0.258 (1.46)	0.041 (0.071)	0.035 (0.061)	0.495 (0.261)

Temperature Indices

	A	
Ti_1	0.48	Min T on window frame, middle of track at top of fixed window (below slab)
Ti_2	0.55	Min T on window glass, top middle corner of door glazing (below slab)
Ti_3	0.60	Min T on sheathing below slab, beside studs along track

Detail 9.1.18

Exterior Insulated 2” x 6” Steel Stud (16” o.c.) Wall Assembly with Vertical Clips (24” o.c.) Supporting Cladding and Sliding Door – Concrete Balcony and Curb Intersection

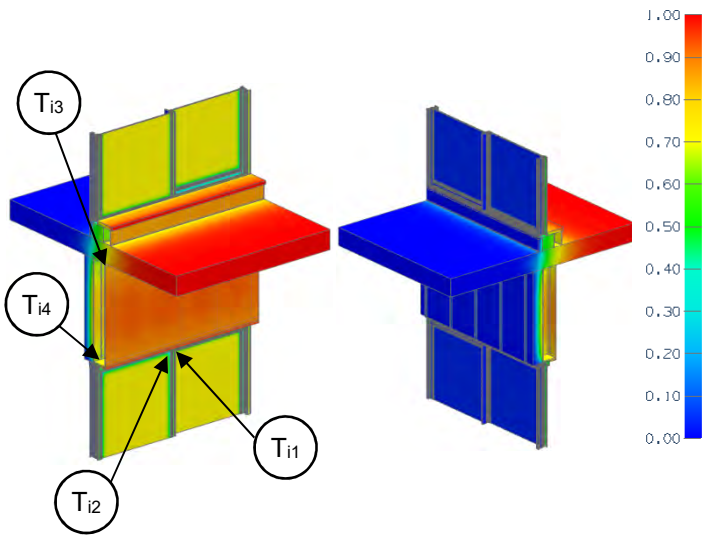

View from Interior View from Exterior

Thermal Performance Indicators

Assembly 1D (Nominal) R-Value	R_{1D}	R-3.2 (0.56 RSI) + exterior insulation
Transmittance / Resistance without Anomaly	U_o, R_o, U_g	U- and R-value for o = “clear wall” g = glazed sliding door, including framing
Transmittance / Resistance	U_s, R_s, U_t, R_t	U and R-values for s = balcony slab + curb t = combined glazing, wall + slab
Surface Temperature Index	T_i	0 = exterior temperature 1 = interior temperature
Linear Transmittance	ψ	Incremental increase in transmittance per linear length

Nominal (1D) vs. Assembly Performance Indicators

Base Assembly – Wall

Exterior Insulation 1D R-Value (RSI)	R_{1D} ft²·hr·°F / Btu (m² K / W)	R_o ft²·hr·°F / Btu (m² K / W)	U_o Btu/ft² ·hr ·°F (W/m² K)
R-4.2 (0.74)	R-7.4 (1.30)	R-6.9 (1.22)	0.144 (0.82)
R-8.4 (1.48)	R-11.6 (2.04)	R-9.8 (1.72)	0.102 (0.58)
R-12.6 (2.22)	R-15.8 (2.78)	R-12.0 (2.11)	0.083 (0.47)
R-16.8 (2.96)	R-20.0 (3.52)	R-14.5 (2.55)	0.069 (0.39)
R-21.0 (3.70)	R-24.2 (4.26)	R-16.7 (2.95)	0.060 (0.34)

Base Assembly – Glazed Door

$U_{centre\ of\ glass}$ Btu/ft² ·hr ·°F (W/m² K)	U_g Btu/ft² ·hr ·°F (W/m² K)
0.321 (1.82)	0.552 (3.13)

Balcony Transition Transmittance

Exterior Insulation 1D R-Value (RSI)	R_t ft²·hr·°F / Btu (m² K / W)	U_t Btu/ft² ·hr ·°F (W/m² K)	ψ Door Head Btu/ft ·hr ·°F (W/m K)	ψ Door Sill Btu/ft ·hr ·°F (W/m K)	ψ Balcony Btu/ft ·hr ·°F (W/m K)
R-4.2 (0.74)	R-2.3 (0.41)	0.427 (2.43)	0.145 (0.251)	0.065 (0.112)	0.394 (0.682)
R-8.4 (1.48)	R-2.4 (0.42)	0.415 (2.35	0.161 (0.279)		0.444 (0.769)
R-12.6 (2.22)	R-2.4 (0.43)	0.409 (2.32)	0.154 (0.267)		0.477 (0.825)
R-16.8 (2.96)	R-2.5 (0.44)	0.404 (2.30)	0.176 (0.305)		0.475 (0.822)
R-21.0 (3.70)	R-2.5 (0.44)	0.401 (2.28)	0.181 (0.313)		0.483 (0.836)

Balcony Only

R_s ft²·hr·°F / Btu (m² K / W)	U_s Btu/ft² ·hr ·°F (W/m² K)
R-3.0 (0.52)	0.338 (1.92)
R-2.6 (0.46)	0.381 (2.16)
R-2.4 (0.43)	0.409 (2.32)
R-2.5 (0.43)	0.407 (2.31)
R-2.4 (0.43)	0.414 (2.35)

Temperature Indices

	R4.2	R8.4	R12.6	R16.8	R21.0	
T_{i1}	0.13	0.13	0.13	0.13	0.13	Min T on window frame at centre mullion of sliding door
T_{i2}	0.44	0.44	0.44	0.44	0.44	Min T on window glass at 30 mm away from sight edge at fixed glazing
T_{i3}	0.75	0.72	0.73	0.74	0.75	Min T on slab at wall ceiling
T_{i4}	0.50	0.48	0.49	0.50	0.50	Min T on sheathing at sliding door head

Detail 9.1.19

Exterior and Interior Insulated 2” x 6” Steel Stud (16” o.c.) Wall Assembly with Vertical Clips (24” o.c.) Supporting Cladding with R-19 Batt in Stud Cavity and Sliding Door – Concrete Balcony and Curb Intersection

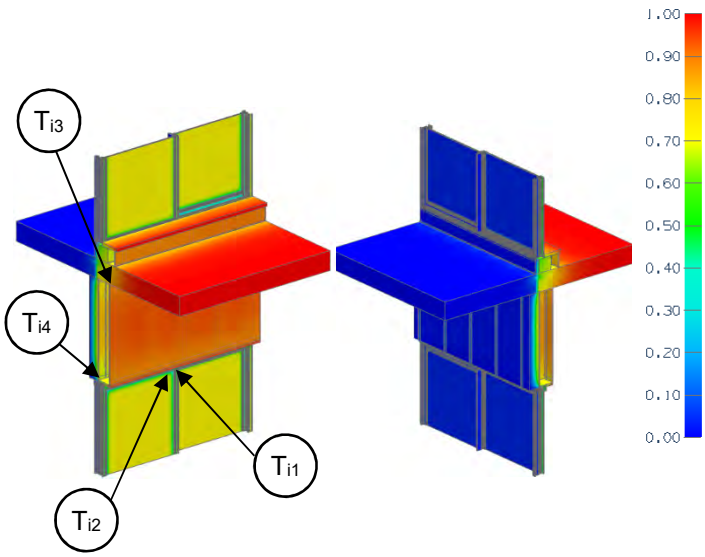

View from Interior View from Exterior

Thermal Performance Indicators

Assembly 1D (Nominal) R-Value	R_{1D}	R-21.3 (3.75 RSI) + exterior insulation
Transmittance / Resistance without Anomaly	U_o, R_o, U_g	U- and R-value for o = “clear wall” g = glazed sliding door, including framing
Transmittance / Resistance	U_s, R_s, U_t, R_t,	U and R-values for s = balcony slab + curb t = combined glazing, wall + slab
Surface Temperature Index	T_i	0 = exterior temperature 1 = interior temperature
Linear Transmittance	ψ	Incremental increase in transmittance per linear length

Nominal (1D) vs. Assembly Performance Indicators

Base Assembly – Wall

Exterior Insulation 1D R-Value (RSI)	R_{1D} ft²·hr·°F / Btu (m² K / W)	R_o ft²·hr·°F / Btu (m² K / W)	U_o Btu/ft² ·hr ·°F (W/m² K)
R-4.2 (0.74)	R-25.5 (4.49)	R-15.2 (2.67)	0.066 (0.37)
R-8.4 (1.48)	R-29.7 (5.23)	R-17.7 (3.12)	0.056 (0.32)
R-12.6 (2.22)	R-33.9 (5.97)	R-19.8 (3.48)	0.051 (0.29)
R-16.8 (2.96)	R-38.1 (6.71)	R-22.3 (3.92)	0.045 (0.26)
R-21.0 (3.70)	R-42.3 (7.45)	R-24.5 (4.32)	0.041 (0.23)

Base Assembly – Glazed Door

$U_{centre\ of\ glass}$ Btu/ft² ·hr ·°F (W/m² K)	U_g Btu/ft² ·hr ·°F (W/m² K)
0.321 (1.82)	0.552 (3.13)

Balcony Transition Transmittance

Exterior Insulation 1D R-Value (RSI)	R_t ft²·hr·°F / Btu (m² K / W)	U_t Btu/ft² ·hr ·°F (W/m² K)	ψ Door Head Btu/ft ·hr ·°F (W/m K)	ψ Door Sill Btu/ft ·hr ·°F (W/m K)	ψ Balcony Btu/ft ·hr ·°F (W/m K)
R-4.2 (0.74)	R-2.5 (0.44)	0.400 (2.27)	0.159 (0.276)	0.065 (0.112)	0.466 (0.807)
R-8.4 (1.48)	R-2.5 (0.44)	0.396 (2.25)	0.159 (0.275)		0.464 (0.804)
R-12.6 (2.22)	R-2.5 (0.45)	0.393 (2.23)	0.151 (0.262)		0.471 (0.815)
R-16.8 (2.96)	R-2.6 (0.45)	0.390 (2.28)	0.162 (0.280)		0.458 (0.793)
R-21.0 (3.70)	R-2.6 (0.45)	0.389 (2.21)	0.163 (0.282)		0.458 (0.793)

Balcony Only

R_s ft²·hr·°F / Btu (m² K / W)	U_s Btu/ft² ·hr ·°F (W/m² K)
R-2.5 (0.44)	0.399 (2.27)
R-2.5 (0.44)	0.398 (2.26)
R-2.5 (0.44)	0.404 (2.29)
R-2.5 (0.45)	0.393 (2.23)
R-2.5 (0.45)	0.393 (2.23)

Temperature Indices

	R4.2	R8.4	R12.6	R16.8	R21.0	
T_{i1}	0.13	0.13	0.13	0.13	0.13	Min T on window frame at centre mullion of sliding door
T_{i2}	0.43	0.43	0.43	0.43	0.43	Min T on window glass at 30 mm away from sight edge at fixed glazing
T_{i3}	0.71	0.69	0.70	0.71	0.71	Min T on slab at wall ceiling
T_{i4}	0.41	0.39	0.40	0.40	0.41	Min T on sheathing at sliding door head

Detail 9.1.20

Exterior Insulated 2” x 6” Steel Stud (16” o.c.) Wall Assembly with Vertical Clips (24” o.c.) Supporting Cladding and Sliding Door – Structural Thermal Break at Concrete Balcony and Curb Intersection

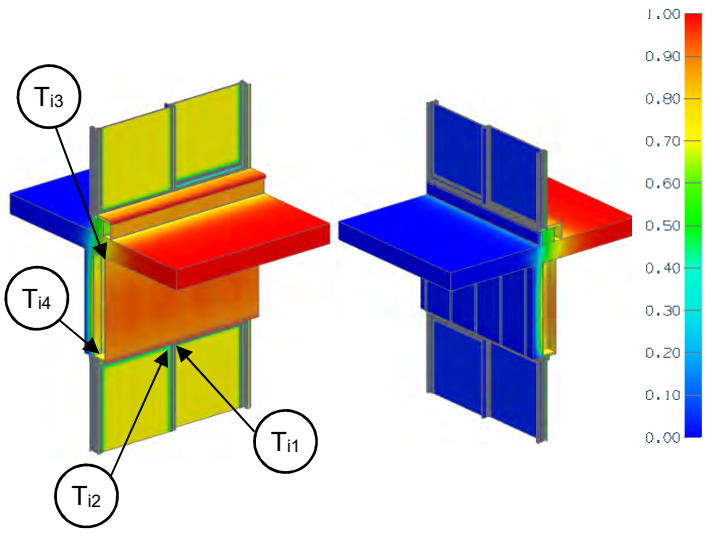

View from Interior View from Exterior

Thermal Performance Indicators

Assembly 1D (Nominal) R-Value	R_{1D}	R-3.2 (0.56 RSI) + exterior insulation
Transmittance / Resistance without Anomaly	U_o, R_o, U_g	U- and R-value for o = “clear wall” g = glazed sliding door, including framing
Transmittance / Resistance	U_s, R_s, U_t, R_t	U and R-values for s = balcony slab + curb t = combined glazing, wall + slab
Surface Temperature Index	T_i	0 = exterior temperature 1 = interior temperature
Linear Transmittance	ψ	Incremental increase in transmittance per linear length

Nominal (1D) vs. Assembly Performance Indicators

Base Assembly – Wall

Exterior Insulation 1D R-Value (RSI)	R_{1D} ft²·hr·°F / Btu (m² K / W)	R_o ft²·hr·°F / Btu (m² K / W)	U_o Btu/ft² ·hr ·°F (W/m² K)
R-4.2 (0.74)	R-7.4 (1.30)	R-6.9 (1.22)	0.144 (0.82)
R-8.4 (1.48)	R-11.6 (2.04)	R-9.8 (1.72)	0.102 (0.58)
R-12.6 (2.22)	R-15.8 (2.78)	R-12.0 (2.11)	0.083 (0.47)
R-16.8 (2.96)	R-20.0 (3.52)	R-14.5 (2.55)	0.069 (0.39)
R-21.0 (3.70)	R-24.2 (4.26)	R-16.7 (2.95)	0.060 (0.34)

Base Assembly – Glazed Door

$U_{centre\ of\ glass}$ Btu/ft² ·hr ·°F (W/m² K)	U_g Btu/ft² ·hr ·°F (W/m² K)
0.321 (1.82)	0.552 (3.13)

Balcony Transition Transmittance

Exterior Insulation 1D R-Value (RSI)	R_t ft²·hr·°F / Btu (m² K / W)	U_t Btu/ft² ·hr ·°F (W/m² K)	ψ Door Head Btu/ft ·hr ·°F (W/m K)	ψ Door Sill Btu/ft ·hr ·°F (W/m K)	ψ Balcony Btu/ft ·hr ·°F (W/m K)
R-4.2 (0.74)	R-2.5 (0.44)	0.399 (2.26)	0.145 (0.251)	0.065 (0.112)	0.094 (0.163)
R-8.4 (1.48)	R-2.6 (0.46)	0.386 (2.19)	0.161 (0.279)		0.144 (0.249)
R-12.6 (2.22)	R-2.6 (0.46)	0.382 (2.17)	0.154 (0.267)		0.193 (0.333)
R-16.8 (2.96)	R-2.6 (0.47)	0.378 (2.15)	0.176 (0.305)		0.200 (0.346)
R-21.0 (3.70)	R-2.7 (0.47)	0.376 (2.14)	0.181 (0.313)		0.218 (0.377)

Balcony Only

R_s ft²·hr·°F / Btu (m² K / W)	U_s Btu/ft² ·hr ·°F (W/m² K)
R-12.4 (2.18)	0.081 (0.46)
R-8.1 (1.43)	0.123 (0.70)
R-6.1 (1.07)	0.165 (0.94)
R-5.8 (1.03)	0.171 (0.97)
R-5.4 (0.94)	0.187 (1.06)

Temperature Indices

	R4.2	R8.4	R12.6	R16.8	R21.0	
T_{i1}	0.13	0.13	0.13	0.13	0.13	Min T on window frame at centre mullion of sliding door
T_{i2}	0.44	0.44	0.44	0.44	0.44	Min T on window glass at 30 mm away from sight edge at fixed glazing
T_{i3}	0.84	0.84	0.84	0.84	0.84	Min T on slab at wall ceiling
T_{i4}	0.50	0.48	0.49	0.50	0.50	Min T on sheathing at sliding door head

Detail 9.1.21

Exterior and Interior Insulated 2” x 6” Steel Stud (16” o.c.) Wall Assembly with Vertical Clips (24” o.c.) Supporting Cladding with R-19 Batt in Stud Cavity and Sliding Door – Structural Thermal Break at Concrete Balcony and Curb Intersection

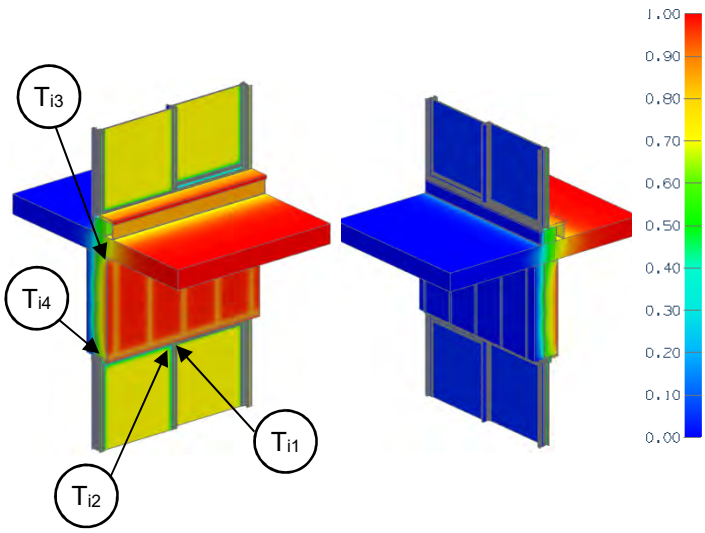

View from Interior View from Exterior

Thermal Performance Indicators

Assembly 1D (Nominal) R-Value	R_{1D}	R-21.3 (3.75 RSI) + exterior insulation
Transmittance / Resistance without Anomaly	U_o, R_o, U_g	U- and R-value for o = “clear wall” g = glazed sliding door, including framing
Transmittance / Resistance	U_s, R_s, U_t, R_t	U and R-values for s = balcony slab + curb t = combined glazing, wall + slab
Surface Temperature Index	T_i	0 = exterior temperature 1 = interior temperature
Linear Transmittance	ψ	Incremental increase in transmittance per linear length

Nominal (1D) vs. Assembly Performance Indicators

Base Assembly – Wall

Exterior Insulation 1D R-Value (RSI)	R_{1D} ft²·hr·°F / Btu (m² K / W)	R_o ft²·hr·°F / Btu (m² K / W)	U_o Btu/ft² ·hr ·°F (W/m² K)
R-4.2 (0.74)	R-25.5 (4.49)	R-15.2 (2.67)	0.066 (0.37)
R-8.4 (1.48)	R-29.7 (5.23)	R-17.7 (3.12)	0.056 (0.32)
R-12.6 (2.22)	R-33.9 (5.97)	R-19.8 (3.48)	0.051 (0.29)
R-16.8 (2.96)	R-38.1 (6.71)	R-22.3 (3.92)	0.045 (0.26)
R-21.0 (3.70)	R-42.3 (7.45)	R-24.5 (4.32)	0.041 (0.23)

Base Assembly – Glazed Door

$U_{centre\ of\ glass}$ Btu/ft² ·hr ·°F (W/m² K)	U_g Btu/ft² ·hr ·°F (W/m² K)
0.321 (1.82)	0.552 (3.13)

Balcony Transition Transmittance

Exterior Insulation 1D R-Value (RSI)	R_t ft²·hr·°F / Btu (m² K / W)	U_t Btu/ft² ·hr ·°F (W/m² K)	ψ Door Head Btu/ft ·hr ·°F (W/m K)	ψ Door Sill Btu/ft ·hr ·°F (W/m K)	ψ Balcony Btu/ft ·hr ·°F (W/m K)
R-4.2 (0.74)	R-2.7 (0.47)	0.375 (2.13)	0.159 (0.276)	0.065 (0.112)	0.201 (0.347)
R-8.4 (1.48)	R-2.7 (0.47)	0.371 (2.11)	0.159 (0.275)		0.199 (0.344)
R-12.6 (2.22)	R-2.7 (0.48)	0.369 (2.10)	0.151 (0.262)		0.218 (0.377)
R-16.8 (2.96)	R-2.7 (0.48)	0.368 (2.09)	0.162 (0.280)		0.218 (0.378)
R-21.0 (3.70)	R-2.7 (0.48)	0.367 (2.08)	0.163 (0.282)		0.224 (0.388)

Balcony Only

R_s ft²·hr·°F / Btu (m² K / W)	U_s Btu/ft² ·hr ·°F (W/m² K)
R-5.8 (1.02)	0.172 (0.98)
R-5.9 (1.03)	0.171 (0.97)
R-5.4 (0.94)	0.187 (1.06)
R-5.3 (0.94)	0.187 (1.06)
R-5.2 (0.92)	0.192 (1.09)

Temperature Indices

	R4.2	R8.4	R12.6	R16.8	R21.0	
T_{i1}	0.13	0.13	0.13	0.13	0.13	Min T on window frame at centre mullion of sliding door
T_{i2}	0.43	0.43	0.43	0.43	0.43	Min T on window glass at 30 mm away from sight edge at fixed glazing
T_{i3}	0.82	0.82	0.82	0.82	0.82	Min T on slab at wall ceiling
T_{i4}	0.41	0.37	0.40	0.40	0.41	Min T on sheathing at sliding door head

10.0 Roofs

Detail 10.1.1 ..... B.10.1

Exterior Insulated Sloped Metal Roof with Metal Sub-Girts (12” o.c.) Supporting Standing Seam Metal Roof – Clear Roof

Detail 10.1.2 ..... B.10.2

Exterior Insulated Sloped Metal Roof with Metal Sub-Girts (24” o.c.) Supporting Standing Seam Metal Roof – Clear Roof

Detail 10.1.3 ..... B.10.3

Exterior Insulated Sloped Metal Roof with Metal Sub-Girts (36” o.c.) Supporting Standing Seam Metal Roof – Clear Roof

Detail 10.1.4 ..... B.10.4

Insulated Sheet Steel Roof Supported by Thermal Chairs – Baseline System – Clear Roof

Detail 10.1.5 ..... B.10.5

Insulated Sheet Steel Roof Supported by Thermal Chairs – Additional Scenarios – Clear Roof

Detail 10.1.6 ..... B.10.6

Insulated Sheet Steel Roof Supported by Thermal Chairs – Additional Insulation Type Scenarios – Clear Roof

Detail 10.1.7 ..... B.10.7

Insulated Standing Seam Roof Supported by Thermal Chairs – Clear Wall

Detail 10.1.8 ..... B.10.8

Standing Seam Roof with Draped Insulation – Clear Wall

Detail 10.1.9 ..... B.10.9

Exterior Insulated Low Sloped Roof – Clear Roof Assembly

Detail 10.1.10 ..... B.10.10

Exterior Insulated Sloped Metal Roof with Bearing Plates 18” x 48” spacing – Clear Roof Assembly

Detail 10.1.11 ..... B.10.11

Exterior Insulated Sloped Metal Roof with High Compressive Strength Mineral Wool Insulation and with Bearing Plates 18” x 48” spacing – Clear Roof Assembly

Detail 10.2.1 ..... B.10.12

Exterior Insulated Sloped Metal Roof with Metal Sub-Girts (24” o.c.) Supporting Metal Roof – Ridge Intersection

Detail 10.2.2 ..... B.10.13

Insulated Concrete Slab – Concrete Curb or Wall Intersection

Detail 10.2.3 ..... B.10.14

Owens Corning Insulated Projected Membrane Roof – Floating Concrete Wall Intersection

Detail 10.2.4 ..... **B.10.15**

Exterior Insulated Sloped Metal Roof with Metal Sub-Girts (24” o.c.) Supporting Standing Seam Metal Roof and Curtain Wall – Roof to Wall Intersection with Through Wall Structural Beam and Continuous Through Wall Structural Metal Deck

Detail 10.2.5 ..... **B.10.16**

Exterior Insulated Sloped Metal Roof with Metal Sub-Girts (24” o.c.) Supporting Standing Seam Metal Roof and Curtain Wall – Roof to Wall Intersection with Through Wall Structural Beam and Thermally Broken Structural Metal Deck

Detail 10.2.6 ..... **B.10.17**

Exterior Insulated Sloped Metal Roof with Metal Sub-Girts (24” o.c.) Supporting Standing Seam Metal Roof and Curtain Wall – Roof to Wall Intersection with Through Wall Structural Beam and Fully Insulated Soffit

Detail 10.3.1 ..... **B.10.18**

Exterior Insulated Conventional Flat Roof – Roof Anchor

Detail 10.3.2 ..... **B.10.19**

Exterior Insulated Conventional Flat Roof – Armatherm Thermal Break under Roof Anchor

Detail 10.3.3 ..... **B.10.20**

Exterior Insulated Conventional Low-Sloped Roof – Roof Anchor

Detail 10.3.4 ..... **B.10.21**

Exterior Insulated Conventional Low-Sloped Roof – Thermal Break in Roof Anchor

Detail 10.1.1

Exterior Insulated Sloped Metal Roof with Metal Sub-Girts (12" o.c.) Supporting Standing Seam Metal Roof – Clear Roof

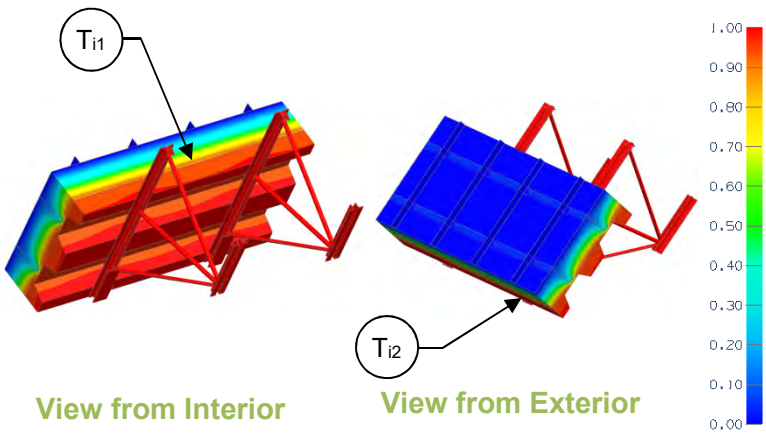

Thermal Performance Indicators

Assembly 1D (Nominal) R Value	R_{1D}	R-3.0 (0.53 RSI) + exterior insulation
Transmittance / Resistance	U_o, R_o	"clear field" U- and R-value
Surface Temperature Index[1]	T_i	0 = exterior temperature 1 = interior temperature

[1]Surface temperatures are a result of steady-state conductive heat flow with constant heat transfer coefficients. Limitations are identified in final report.

Nominal (1D) vs. Assembly Performance Indicators

Exterior Insulation 1D R-Value (RSI)	R_{1D} ft²·hr·°F / Btu (m² K / W)	R_o ft²·hr·°F / Btu (m² K / W)	U_o Btu/ft² ·hr ·°F (W/m² K)
R-20 (3.52)	R-23 (4.05)	R-7.0 (1.24)	0.142 (0.81)
R-30 (5.28)	R-33 (5.81)	R-8.0 (1.41)	0.125 (0.71)
R-40 (7.04)	R-43 (7.57)	R-8.9 (1.56)	0.113 (0.64)

Temperature Indices

	R20	R30	R40	
T_{i1}	0.89	0.90	0.91	Min T on sheathing, closest to girt flange between joists
T_{i2}	0.93	0.94	0.94	Max T on sheathing above end bearings away from girts

Detail 10.1.2

Exterior Insulated Sloped Metal Roof with Metal Sub-Girts (24" o.c.) Supporting Standing Seam Metal Roof – Clear Roof

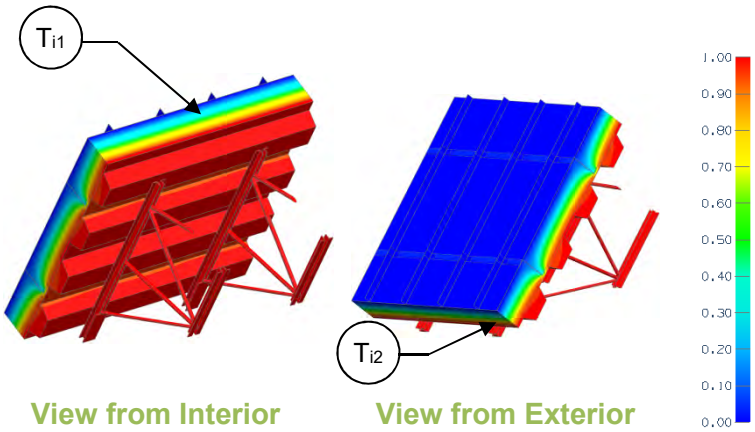

View from Interior View from Exterior

Thermal Performance Indicators

Assembly 1D (Nominal) R Value	R_{1D}	R-3.0 (0.53 RSI) + exterior insulation
Transmittance / Resistance	U_o, R_o	"clear field" U- and R-value
Surface Temperature Index[1]	T_i	0 = exterior temperature 1 = interior temperature

[1]Surface temperatures are a result of steady-state conductive heat flow with constant heat transfer coefficients. Limitations are identified in final report.

Nominal (1D) vs. Assembly Performance Indicators

Exterior Insulation 1D R-Value (RSI)	R_{1D} $ft^2 \cdot hr \cdot {}^oF$ / Btu (m^2 K / W)	R_o $ft^2 \cdot hr \cdot {}^oF$ / Btu (m^2 K / W)	U_o Btu/ft^2 ·hr ·^oF (W/m^2 K)
R-20 (3.52)	R-23 (4.05)	R-10.6 (1.87)	0.094 (0.53)
R-30 (5.28)	R-33 (5.81)	R-12.8 (2.25)	0.078 (0.44)
R-40 (7.04)	R-43 (7.57)	R-14.7 (2.58)	0.068 (0.39)

Temperature Indices

	R20	R30	R40	
T_{i1}	0.90	0.91	0.92	Min T on sheathing, closest to girt flange between joists
T_{i2}	0.97	0.97	0.98	Max T on sheathing, above end bearings away from girts

Detail 10.1.3

Exterior Insulated Sloped Metal Roof with Metal Sub-Girts (36" o.c.) Supporting Standing Seam Metal Roof – Clear Roof

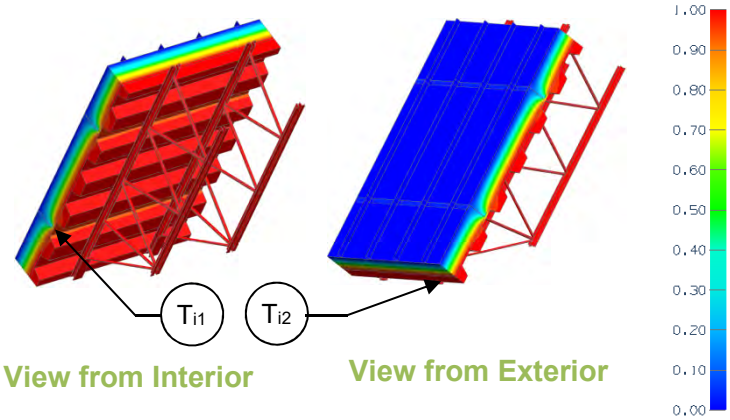

View from Interior

View from Exterior

Thermal Performance Indicators

Assembly 1D (Nominal) R Value	R_{1D}	R-3.0 (0.53 RSI) + exterior insulation
Transmittance / Resistance	U_o, R_o	"clear field" U- and R-value
Surface Temperature Index[1]	T_i	0 = exterior temperature 1 = interior temperature

[1]Surface temperatures are a result of steady-state conductive heat flow with constant heat transfer coefficients. Limitations are identified in final report.

Nominal (1D) vs. Assembly Performance Indicators

Exterior Insulation 1D R-Value (RSI)	R_{1D} ft²·hr·°F / Btu (m² K / W)	R_o ft²·hr·°F / Btu (m² K / W)	U_o Btu/ft² ·hr ·°F (W/m² K)
R-20 (3.52)	R-23 (4.05)	R-12.7 (2.25)	0.078 (0.45)
R-30 (5.28)	R-33 (5.81)	R-15.8 (2.79)	0.063 (0.36)
R-40 (7.04)	R-43 (7.57)	R-18.5 (3.25)	0.054 (0.31)

Temperature Indices

	R20	R30	R40	
T_{i1}	0.90	0.91	0.92	Min T on sheathing, at girt between joists
T_{i2}	0.97	0.98	0.98	Max T on sheathing, above end bearings away from girts

Detail 10.1.4

Insulated Sheet Steel Roof Supported by Thermal Chairs – Baseline System – Clear Roof

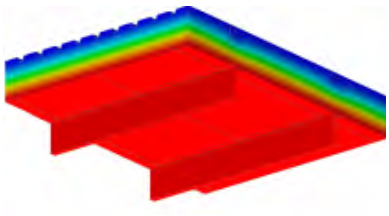

View from Interior

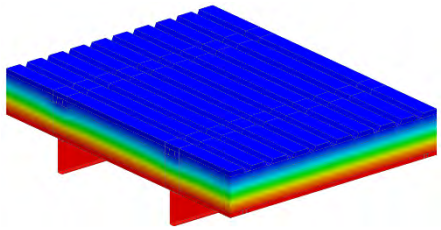

View from Exterior

Thermal Performance Indicators

Assembly 1D (Nominal) R-Value	R_{1D}	R-1.3 (0.23 RSI) + exterior insulation
Transmittance / Resistance	U_o, R_o	"Clear wall" U- and R-value

Nominal (1D) vs. Assembly Performance Indicators

Baseline System

Chair Spacing (in)	Purlin Spacing (in)	Exterior Insulation 1D R-Value (RSI)	R_{1D} ft²·hr·°F / Btu (m² K / W)	R_o ft²·hr·°F / Btu (m² K / W)	U_o Btu/ft² ·hr ·°F (W/m² K)
24	48	R-45 (7.95)	R-46.3 (8.15)	R-30.5 (5.38)	0.033 (0.186)
24	60	R-45 (7.95)	R-46.3 (8.15)	R-32.7 (5.76)	0.031 (0.174)
24	72	R-45 (7.95)	R-46.3 (8.15)	R-34.3 (6.04)	0.029 (0.166)
36	48	R-45 (7.95)	R-46.3 (8.15)	R-33.8 (5.96)	0.030 (0.168)
36	60	R-45 (7.95)	R-46.3 (8.15)	R-35.9 (6.32)	0.028 (0.158)
36	72	R-45 (7.95)	R-46.3 (8.15)	R-37.4 (6.58)	0.027 (0.152)
48	48	R-45 (7.95)	R-46.3 (8.15)	R-39.6 (6.97)	0.025 (0.143)
48	60	R-45 (7.95)	R-46.3 (8.15)	R-40.4 (7.11)	0.025 (0.141)
48	72	R-45 (7.95)	R-46.3 (8.15)	R-41.4 (7.29)	0.024 (0.137)

Sensitivity Analysis – Impact of Liner, Cladding, Chair and Purlin Thickness for 36" o.c. Chair Spacing and 48" o.c. Purlin Spacing

Steel Thickness	Exterior Insulation 1D R-Value (RSI)	R_{1D} ft²·hr·°F / Btu (m² K / W)	Liner		Cladding		Chair		Purlins	
			R_o ft²·hr·°F / Btu (m² K / W)	U_o Btu/ft² ·hr ·°F (W/m² K)	R_o ft²·hr·°F / Btu (m² K / W)	U_o Btu/ft² ·hr ·°F (W/m² K)	R_o ft²·hr·°F / Btu (m² K / W)	U_o Btu/ft² ·hr ·°F (W/m² K)	R_o ft²·hr·°F / Btu (m² K / W)	U_o Btu/ft² ·hr ·°F (W/m² K)
24 Ga	R-45 (7.95)	R-46.3 (8.15)	R-33.8 (5.96)	0.030 (0.168)	R-33.8 (5.96)	0.030 (0.168)	R-34.1 (6.01)	0.029 (0.167)	-	-
18 Ga	R-45 (7.95)	R-46.3 (8.15)	R-33.8 (5.95)	0.030 (0.168)	R-33.7 (5.94)	0.030 (0.168)	R-33.8 (5.96)	0.030 (0.168)	-	-
14 Ga	R-45 (7.95)	R-46.3 (8.15)	-	-	R-33.7 (5.93)	0.030 (0.169)	R-33.6 (5.91)	0.030 (0.169)	R-33.8 (5.96)	0.030 (0.168)
6 Ga	R-45 (7.95)	R-46.3 (8.15)	-	-	-	-	-	-	R-33.8 (5.95)	0.030 (0.168)

Detail 10.1.5

Insulated Sheet Steel Roof Supported by Thermal Chairs – Additional Scenarios – Clear Roof

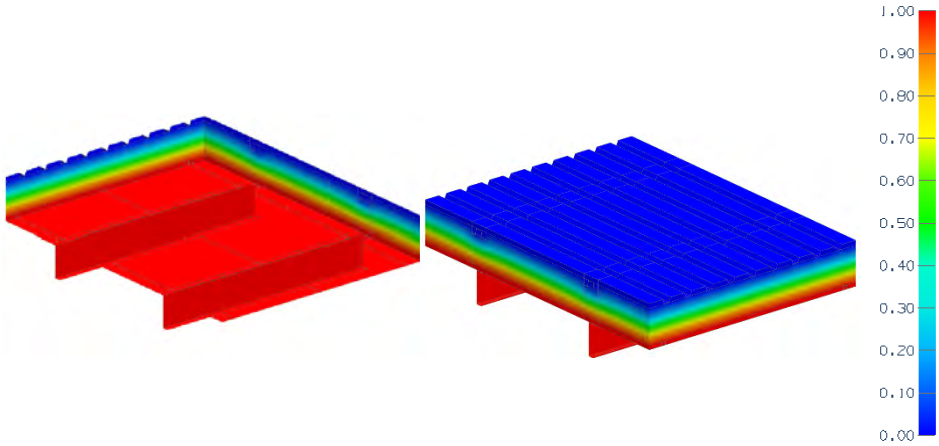

View from Interior View from Exterior

Thermal Performance Indicators

Assembly 1D (Nominal) R-Value	R_{1D}	R-1.3 (0.23 RSI) + exterior insulation
Transmittance / Resistance	U_o, R_o	"Clear wall" U- and R-value

Nominal (1D) vs. Assembly Performance Indicators

Sensitivity Analysis – Impact of PVC Coated Thermal Chairs Spaced at 36" o.c. and Purlins Spaced at 48" o.c.

PVC Coating Thickness on Thermal Chairs and Outer Rails (mils)	Exterior Insulation 1D R-Value (RSI)	R_{1D} ft²·hr·°F / Btu (m² K / W)	R_o ft²·hr·°F / Btu (m² K / W)	U_o Btu/ft² ·hr ·°F (W/m² K)
0 Top, 0 Bottom	R-45 (7.95)	R-46.3 (8.15)	R-33.8 (5.96)	0.030 (0.168)
8 Top, 4 Bottom	R-45 (7.95)	R-46.3 (8.15)	R-34.2 (6.03)	0.029 (0.166)

Sensitivity Analysis – Impact of Thermal Tape Thickness for Thermal Chairs at 36" o.c. and Purlins at 48" o.c.

Tape Thickness (in)	Tape R-Value (RSI)	Exterior Insulation 1D R-Value (RSI)	R_{1D} ft²·hr·°F / Btu (m² K / W)	R_o ft²·hr·°F / Btu (m² K / W)	U_o Btu/ft² ·hr ·°F (W/m² K)
0	R-0 (0.00)	R-45 (7.95)	R-46.3 (8.15)	R-30.4 (5.36)	0.033 (0.187)
1/8	R-1 (0.23)	R-45 (7.95)	R-46.3 (8.15)	R-33.8 (5.96)	0.030 (0.168)
1/4	R-3 (0.45)	R-45 (7.95)	R-46.3 (8.15)	R-34.3 (6.04)	0.029 (0.166)

Sensitivity Analysis – Variable Material for Thermal Chairs at 36" o.c. and 48" o.c. Purlin Spacing

Thermal Chair Material	Exterior Insulation 1D R-Value (RSI)	R_{1D} ft²·hr·°F / Btu (m² K / W)	R_o ft²·hr·°F / Btu (m² K / W)	U_o Btu/ft² ·hr ·°F (W/m² K)
Steel	R-45 (7.95)	R-46.3 (8.15)	R-33.8 (5.96)	0.030 (0.168)
Plastic	R-45 (7.95)	R-46.3 (8.15)	R-37.1 (6.53)	0.027 (0.153)

Sensitivity Analysis – Reduction in Thermal Chair area for 36"o.c. Chair Spacing and 48"o.c. Purlin Spacing

Thermal Chair Material	Exterior Insulation 1D R-Value (RSI)	R_{1D} ft²·hr·°F / Btu (m² K / W)	R_o ft²·hr·°F / Btu (m² K / W)	U_o Btu/ft² ·hr ·°F (W/m² K)
Baseline	R-45 (7.95)	R-46.3 (8.15)	R-33.8 (5.96)	0.030 (0.168)
20% Reduction	R-45 (7.95)	R-46.3 (8.15)	R-34.0 (5.98)	0.029 (0.167)
30% Reduction	R-45 (7.95)	R-46.3 (8.15)	R-34.4 (6.05)	0.029 (0.165)
40% Reduction	R-45 (7.95)	R-46.3 (8.15)	R-34.6 (6.10)	0.029 (0.164)

Detail 10.1.6

Insulated Sheet Steel Roof Supported by Thermal Chairs – Additional Insulation Type Scenarios – Clear Roof

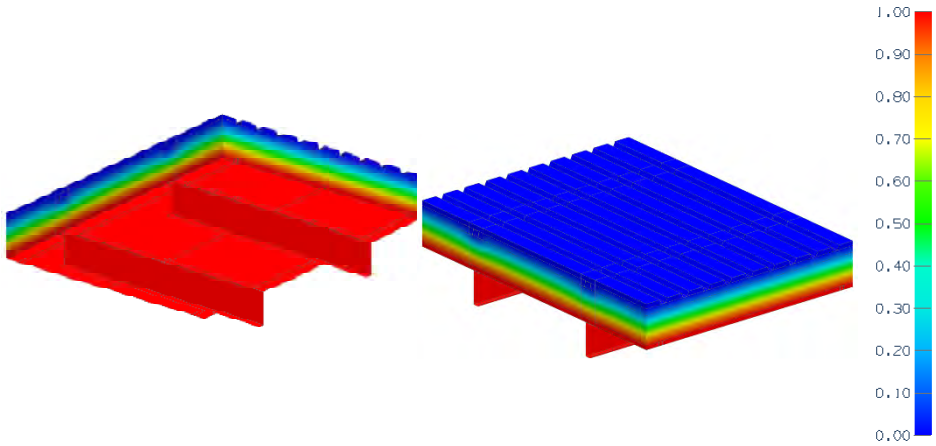

View from Interior View from Exterior

Thermal Performance Indicators

Assembly 1D (Nominal) R-Value	R_{1D}	R-1.3 (0.23 RSI) + exterior insulation
Transmittance / Resistance	U_o, R_o	"Clear wall" U- and R-value

Nominal (1D) vs. Assembly Performance Indicators

Sensitivity Analysis – Impact of Insulation Type and Thickness for Thermal Chairs spaced at 36" o.c. and Purlins Spaced at 48" o.c.

Chair Thickness (in)	Insulation Thickness (in)	R-4.2/inch insulation			R-5/inch insulation			R-6/inch insulation		
		Exterior Insulation 1D R-Value (RSI)	R_o ft²·hr·°F / Btu (m² K / W)	U_o Btu/ft² ·hr ·°F (W/m² K)	Exterior Insulation 1D R-Value (RSI)	R_o ft²·hr·°F / Btu (m² K / W)	U_o Btu/ft² ·hr ·°F (W/m² K)	Exterior Insulation 1D R-Value (RSI)	R_o ft²·hr·°F / Btu (m² K / W)	U_o Btu/ft² ·hr ·°F (W/m² K)
4 ¼	5	R-21 (3.70)	R-19.4 (3.41)	0.052 (0.293)	R-25 (4.40)	R-22.2 (3.91)	0.045 (0.256)	R-30 (5.29)	R-25.6 (4.51)	0.039 (0.222)
6	6 ¾	R-28 (4.99)	R-25.0 (4.40)	0.040 (0.227)	R-34 (5.95)	R-28.6 (5.04)	0.035 (0.198)	R-41 (7.13)	R-32.9 (5.80)	0.030 (0.172)
8 ¼	9	R-38 (6.66)	R-30.7 (5.42)	0.033 (0.185)	R-45 (7.93)	R-35.0 (6.17)	0.029 (0.162)	R-54 (9.51)	R-40.0 (7.04)	0.025 (0.142)
10	10 ¾	R-45 (7.95)	R-33.8 (5.96)	0.030 (0.168)	R-54 (9.46)	R-38.3 (6.74)	0.026 (0.148)	R-64 (11.36)	R-43.4 (7.64)	0.023 (0.131)

Detail 10.1.7

Insulated Standing Seam Roof Supported by Thermal Chairs – Clear Wall

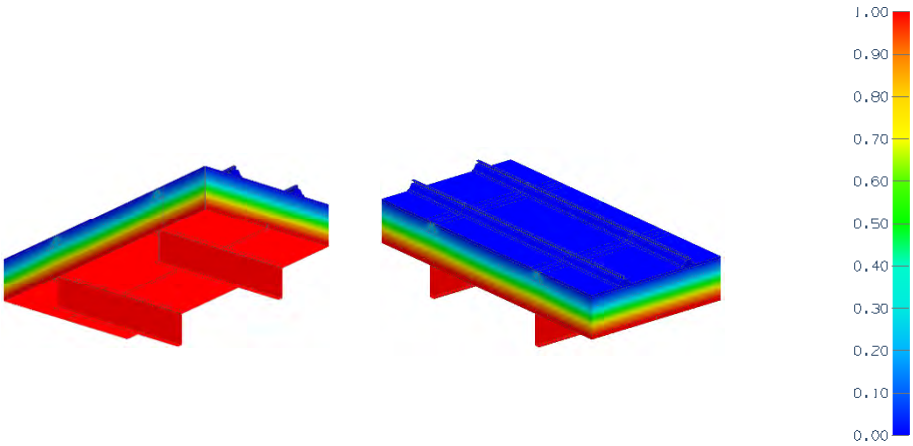

View from Interior View from Exterior

Thermal Performance Indicators

Assembly 1D (Nominal) R-Value	R_{1D}	R-1.3 (0.23 RSI) + exterior insulation
Transmittance / Resistance	U_o, R_o	"Clear wall" U- and R-value

Scenario

Scenario	Insulation Placement
A	Compressed R-19 batt between and over hat tracks
B	Compressed R-19 batt between and over hat tracks with 1" XPS thermal block
C	Compressed R-19 batt between hat tracks
D	Mineral Wool between hat tracks, no compressed insulation over hat tracks

Nominal (1D) vs. Assembly Performance Indicators

Scenario	Exterior Insulation 1D R-Value (RSI)	R_{1D} ft²·hr·°F / Btu (m² K / W)	R_o ft²·hr·°F / Btu (m² K / W)	U_o Btu/ft² ·hr ·°F (W/m² K)
A	R-57.6 (10.1)	R-58.9 (10.33)	R-33.4 (5.87)	0.030 (0.170)
B	R-57.6 (10.1)	R-58.9 (10.33)	R-36.4 (6.40)	0.028 (0.156)
C	R-57.6 (10.1)	R-58.9 (10.33)	R-31.7 (5.59)	0.032 (0.179)
D	R-51.2 (9.0)	R-58.9 (10.33)	R-32.4 (5.71)	0.031 (0.175)

Detail 10.1.8

Standing Seam Roof with Draped Insulation – Clear Wall

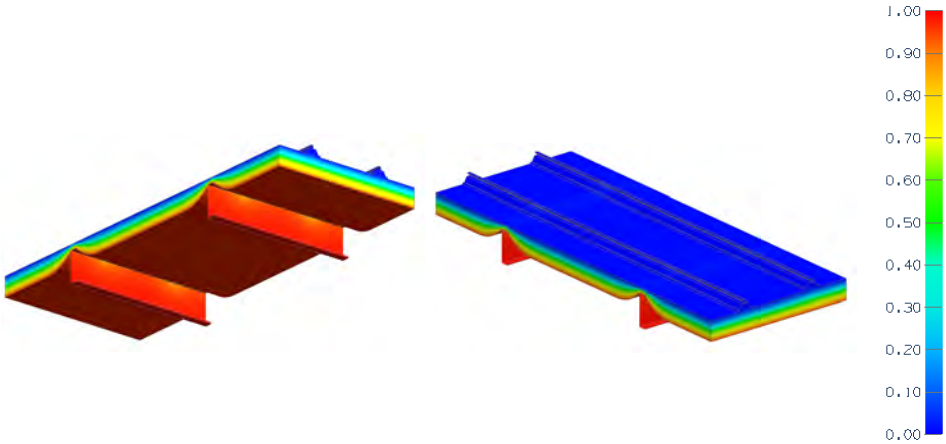

View from Interior View from Exterior

Thermal Performance Indicators

Assembly 1D (Nominal) R-Value	R_{1D}	R-0.8 (0.14 RSI) + exterior insulation
Transmittance / Resistance	U_o, R_o	"Clear wall" U- and R-value

Nominal (1D) vs. Assembly Performance Indicators

Exterior Insulation 1D R-Value (RSI)	R_{1D} $ft^2 \cdot hr \cdot {}^oF$ / Btu (m^2 K / W)	R_o $ft^2 \cdot hr \cdot {}^oF$ / Btu (m^2 K / W)	U_o Btu/ft^2 ·hr ·^oF (W/m^2 K)
R-19 (3.35)	R-19.8 (3.49)	R-15.7(2.77)	0.064 (0.361)

Detail 10.1.9

Exterior Insulated Low Sloped Roof – Clear Roof Assembly

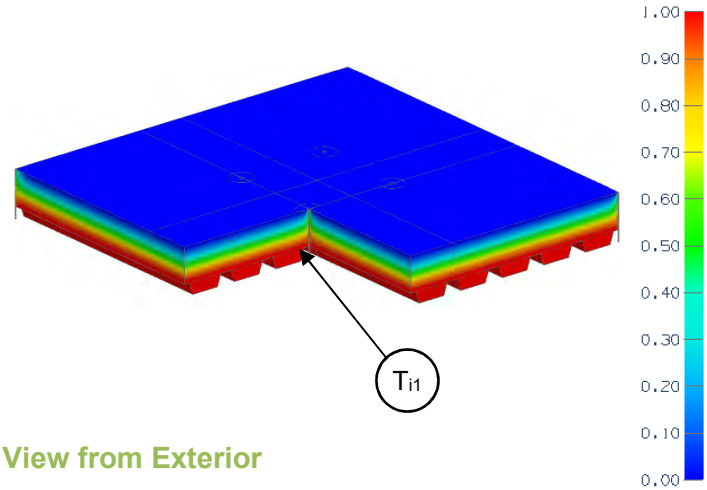

View from Exterior

Thermal Performance Indicators

Assembly 1D (Nominal) R-Value	R_{1D}	R-3.3 (0.59 RSI) + Insulation
Transmittance / Resistance without Anomaly	U_o, R_o	"clear wall" U- and R-value, without fastener
Surface Temperature Index[1]	T_i	0 = exterior temperature 1 = interior temperature
Point Transmittance	χ	Incremental increase in transmittance for fasteners

[1]Surface temperatures are a result of steady-state conductive heat flow with constant heat transfer coefficients. Limitations are identified in final report.

Scenarios

Scenario	Fastener Arrangement	Fastener Size
A	Fully Fastened	#10
B	Fully Fastened	#14
C	Partially Fastened	#10
D	Partially Fastened	#14
E	Fully Adhered	-

Nominal (1D) vs. Assembly Performance Indicators

	Exterior Insulation 1D R-Value (RSI)	R_{1D} ft²·hr·°F / Btu (m² K / W)	R_o ft²·hr·°F / Btu (m² K / W)	U_o Btu/ft² ·hr ·°F (W/m² K)	R ft²·hr·°F / Btu (m² K / W)	U Btu/ft² ·hr ·°F Hey (W/m² K)	χ Btu/hr °F (W/K)
A	R-22.8 (4.02)	R-26.1 (4.60)	R-24.7 (4.35)	0.040 (0.23)	R-23.6 (4.16)	0.042 (0.24)	0.0058 (0.0031)
B	R-22.8 (4.02)	R-26.1 (4.60)	R-24.7 (4.35)	0.040 (0.23)	R-22.8 (4.02)	0.044 (0.25)	0.011 (0.0057)
C	R-22.8 (4.02)	R-26.1 (4.60)	R-24.7 (4.35)	0.040 (0.23)	R-24.5 (4.32)	0.041 (0.23)	0.0010 (0.00052)
D	R-22.8 (4.02)	R-26.1 (4.60)	R-24.7 (4.35)	0.040 (0.23)	R-24.4 (4.30)	0.041 (0.23)	0.0015 (0.00080)
E	R-22.8 (4.02)	R-26.1 (4.60)	R-24.7 (4.35)	0.040 (0.23)	R-24.7 (4.35)	0.040 (0.23)	-

Temperature Indices

	A	B	C	D	E	
T_{i1}	0.95	0.94	0.96	0.96	0.97	At fastener penetration through steel deck

Detail 10.1.10

Exterior Insulated Sloped Metal Roof with Bearing Plates 18” x 48” spacing – Clear Roof Assembly

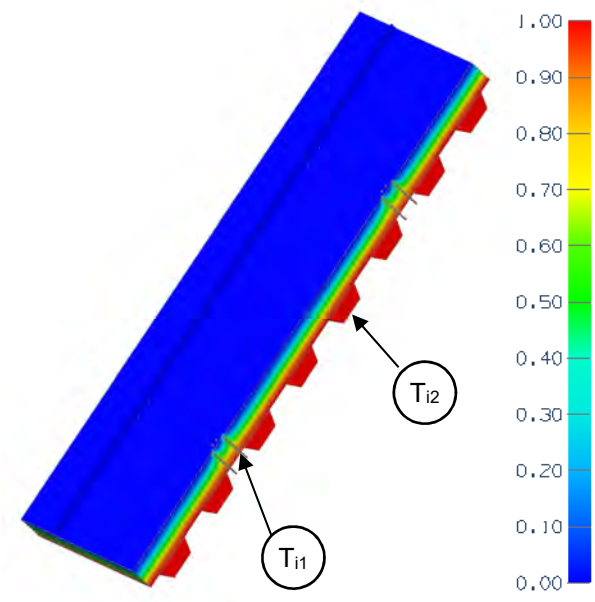

View from Exterior

Thermal Performance Indicators

Assembly 1D (Nominal) R-Value	R_{1D}	R-8.3 (1.44 RSI) + Insulation
Transmittance / Resistance without Anomaly	U_o, R_o	“clear wall” U- and R-value, without fastener
Surface Temperature Index[1]	T_i	0 = exterior temperature 1 = interior temperature
Point Transmittance	χ	Incremental increase in transmittance for bearing plate with two fasteners

[1]Surface temperatures are a result of steady-state conductive heat flow with constant heat transfer coefficients. Limitations are identified in final report.

Nominal (1D) vs. Assembly Performance Indicators

Exterior Insulation 1D R-Value (RSI)	R_{1D} ft²·hr·°F / Btu (m² K / W)	R_o ft²·hr·°F / Btu (m² K / W)	U_o Btu/ft² ·hr ·°F (W/m² K)	R ft²·hr·°F / Btu (m² K / W)	U Btu/ft² ·hr ·°F (W/m² K)	χ Btu/hr °F (W/K)
R-22.8 (4.02)	R-31.1 (5.48)	R-28.2 (4.97)	0.035 (0.20)	R-27.3 (4.81)	0.037 (0.21)	0.0074 (0.0039)
R-34.2 (6.02)	R-42.5 (7.49)	R-39.8 (7.00)	0.025 (0.14)	R-37.8 (6.67)	0.026 (0.15)	0.0076 (0.0040)
R-45.6 (8.03)	R-53.9 (9.49)	R-51.1 (9.00)	0.020 (0.11)	R-48.3 (8.50)	0.021 (0.12)	0.0069 (0.0036)

Temperature Indices

	R22.8	R34.2	R45.6	
T_{i1}	0.95	0.96	0.97	Min T on steel deck, at fasteners
T_{i2}	0.97	0.98	0.99	Max T on steel deck, between fasteners

Detail 10.1.11

Exterior Insulated Sloped Metal Roof with High Compressive Strength Mineral Wool Insulation and with Bearing Plates 18” x 48” spacing – Clear Roof Assembly

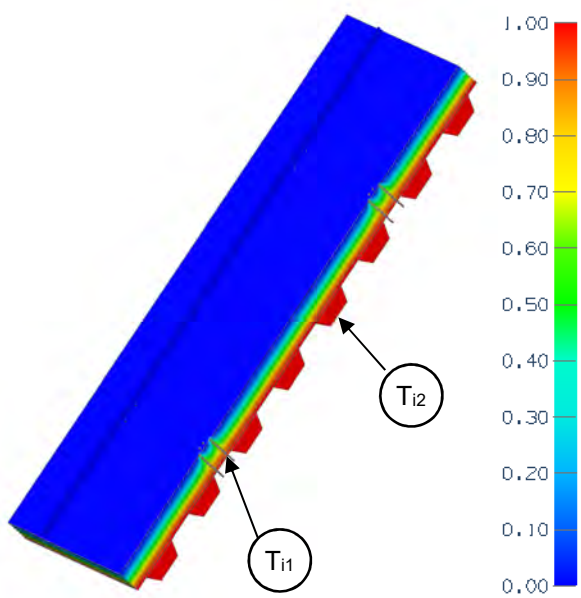

View from Exterior

Thermal Performance Indicators

Assembly 1D (Nominal) R-Value	R_{1D}	R-7.3 (1.27 RSI) + Insulation
Transmittance / Resistance without Anomaly	U_o, R_o	“clear wall” U- and R-value, without fastener
Surface Temperature Index[1]	T_i	0 = exterior temperature 1 = interior temperature
Point Transmittance	χ	Incremental increase in transmittance for bearing plate with two fasteners

[1]Surface temperatures are a result of steady-state conductive heat flow with constant heat transfer coefficients. Limitations are identified in final report.

Nominal (1D) vs. Assembly Performance Indicators

Exterior Insulation 1D R-Value (RSI)	R_{1D} ft²·hr·°F / Btu (m² K / W)	R_o ft²·hr·°F / Btu (m² K / W)	U_o Btu/ft² ·hr ·°F (W/m² K)	R ft²·hr·°F / Btu (m² K / W)	U Btu/ft² ·hr ·°F (W/m² K)	χ Btu/hr °F (W/K)
R-15.2 (2.68)	R-22.5 (3.96)	R-19.7 (3.47)	0.051 (0.29)	R-19.1 (3.37)	0.052 (0.30)	0.0084 (0.0044)
R-22.8 (4.02)	R-30.1 (5.3)	R-27.4 (4.82)	0.037 (0.21)	R-26.4 (4.64)	0.038 (0.22)	0.0086 (0.0045)
R-30.4 (5.35)	R-37.7 (6.64)	R-34.9 (6.15)	0.029 (0.16)	R-33.5 (5.89)	0.030 (0.17)	0.0077 (0.0040)

Temperature Indices

	R15.2	R22.8	R30.4	
T_{i1}	0.937	0.949	0.955	Min T on steel deck, at fasteners
T_{i2}	0.963	0.973	0.979	Max T on steel deck, between fasteners

Detail 10.2.1

Exterior Insulated Sloped Metal Roof with Metal Sub-Girts (24" o.c.) Supporting Metal Roof – Ridge Intersection

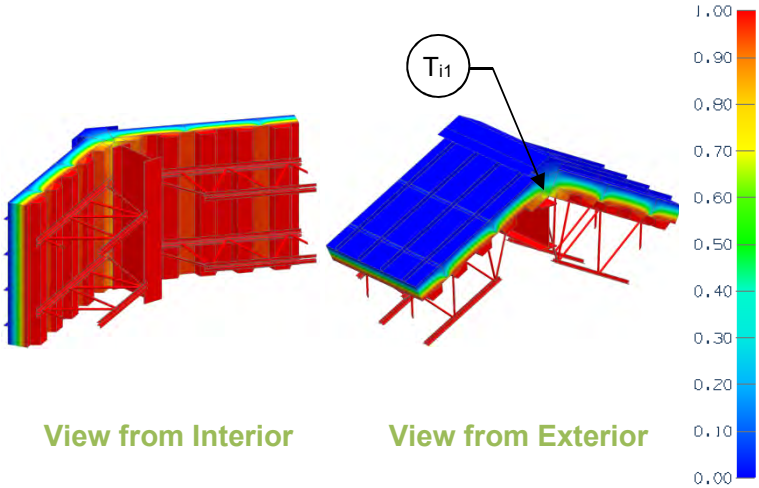

View from Interior View from Exterior

Thermal Performance Indicators

Assembly 1D (Nominal) R-Value	R_{1D}	R-3.0 (0.53 RSI) + exterior insulation
Transmittance / Resistance without Anomaly	U_o, R_o	"clear field" U- and R-value, without ridge (Detail 6.2)
Transmittance / Resistance	U, R	U and R-values for the assembly
Surface Temperature Index[1]	T_i	0 = exterior temperature 1 = interior temperature
Linear Transmittance	ψ	Incremental increase in transmittance per linear length of ridge

[1]Surface temperatures are a result of steady-state conductive heat flow with constant heat transfer coefficients. Limitations are identified in final report.

Nominal (1D) vs. Assembly Performance Indicators

Exterior Insulation 1D R-Value (RSI)	R_{1D} ft²·hr·°F / Btu (m² K / W)	R_o ft²·hr·°F / Btu (m² K / W)	U_o Btu/ft² ·hr ·°F (W/m² K)	R ft²·hr·°F / Btu (m² K / W)	U Btu/ft² ·hr ·°F (W/m² K)	ψ Btu/ft ·hr·°F (W/m K)
R-20 (3.52)	R-23 (4.05)	R-10.6 (1.87)	0.094 (0.53)	R-8.3 (1.46)	0.121 (0.69)	0.279 (0.483)
R-30 (5.28)	R-33 (5.81)	R-12.8 (2.25)	0.078 (0.44)	R-9.6 (1.69)	0.104 (0.59)	0.272 (0.471)

Temperature Indices

	R20	R30	
T_{i1}	0.48	0.51	Min T on sheathing, along ridge

Detail 10.2.2

Insulated Concrete Slab – Concrete Curb or Wall Intersection

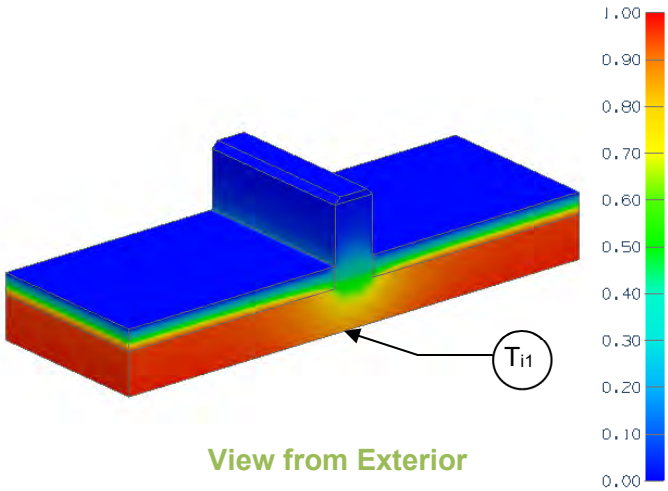

View from Exterior

Thermal Performance Indicators

Assembly 1D (Nominal) R-Value	R_{1D}	R-1.9 (0.33 RSI) + Insulation
Transmittance / Resistance without Anomaly	U_o, R_o	"clear field" U- and R-value, without concrete anomaly
Surface Temperature Index[1]	T_i	0 = exterior temperature 1 = interior temperature
Linear Transmittance	ψ	Incremental increase in transmittance per linear length of concrete anomaly

[1]Surface temperatures are a result of steady-state conductive heat flow with constant heat transfer coefficients. Limitations are identified in final report.

Nominal (1D) vs. Assembly Performance Indicators

Base Assembly – Roof

Exterior Insulation 1D R-Value (RSI)	R_{1D} ft²·hr·°F / Btu (m² K / W)	R_o ft²·hr·°F / Btu (m² K / W)	U_o Btu/ft² ·hr ·°F (W/m² K)
R-20 (3.52)	R-21.9 (3.86)	R-21.9 (3.86)	0.046 (0.26)

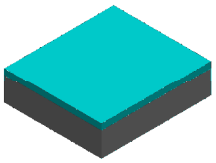

Concrete Anomaly Linear Transmittance

R ft²·hr·°F / Btu (m² K / W)	U Btu/ft² ·hr ·°F (W/m² K)	ψ Btu/ft hr °F (W/m K)
R-8.8 (1.54)	0.114 (0.65)	0.536 (0.927)

Temperature Indices

T_{i1}	0.82	Min T on concrete, at center of anomaly

Detail 10.2.3

Owens Corning Insulated Projected Membrane Roof – Floating Concrete Wall Intersection

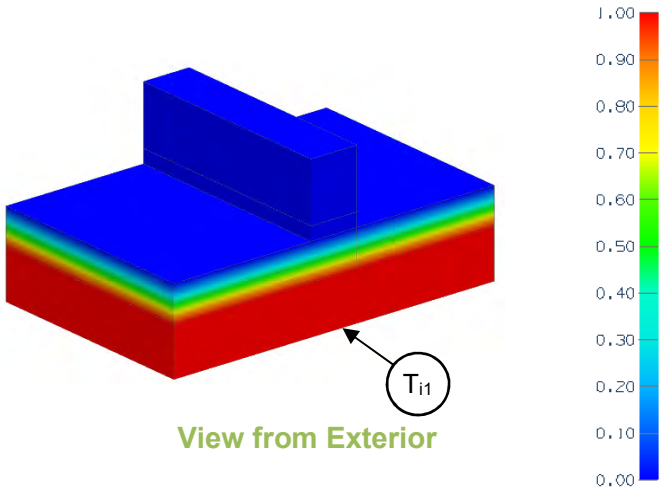

View from Exterior

Thermal Performance Indicators

Assembly 1D (Nominal) R-Value	R_{1D}	R-1.9 (0.33 RSI) + exterior insulation
Transmittance / Resistance without Anomaly	U_o, R_o	"clear wall" U- and R-value, without concrete anomaly
Transmittance / Resistance	U, R	U and R-values for the assembly
Surface Temperature Index[1]	T_i	0 = exterior temperature 1 = interior temperature
Linear Transmittance	ψ	Incremental increase in transmittance per linear length of concrete anomaly

[1]Surface temperatures are a result of steady-state conductive heat flow with constant heat transfer coefficients. Limitations are identified in final report.

Nominal (1D) vs. Assembly Performance Indicators

Base Assembly - Roof

Exterior Insulation 1D R-Value (RSI)	R_{1D} ft²·hr·°F / Btu (m² K / W)	R_o ft²·hr·°F / Btu (m² K / W)	U_o Btu/ft² ·hr ·°F (W/m² K)
R-20 (3.52)	R-21.9 (3.86)	R-21.9 (3.86)	0.046 (0.26)
R-30 (5.28)	R-31.9 (5.62)	R-31.9 (5.62)	0.031 (0.18)
R-40 (7.04)	R-41.9 (7.39)	R-41.9 (7.38)	0.024 (0.14)

Concrete Anomaly Linear Transmittance

R ft²·hr·°F / Btu (m² K / W)	U Btu/ft² ·hr ·°F (W/m² K)	ψ Btu/ft ·hr ·°F (W/m K)
R-21.9 (3.86)	0.046 (0.26)	0 (0)
R-31.9 (5.62)	0.031 (0.18)	0 (0)
R-41.9 (7.38)	0.024 (0.14)	0 (0)

Temperature Indices

T_{i1}	0.97	Min T on concrete, at center of anomaly

Detail 10.2.4

Exterior Insulated Sloped Metal Roof with Metal Sub-Girts (24" o.c.) Supporting Standing Seam Metal Roof and Curtain Wall – Roof to Wall Intersection with Through Wall Structural Beam and Continuous Through Wall Structural Metal Deck

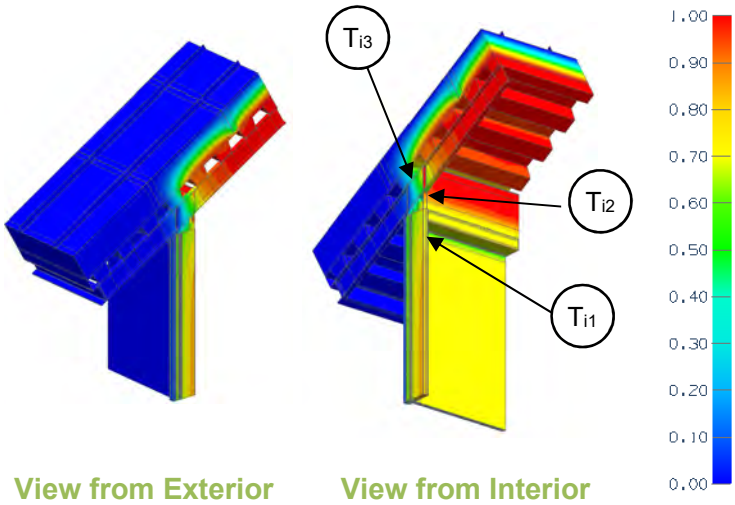

Thermal Performance Indicators

Assembly 1D (Nominal) R-Value	R_{1D}	R-2.5 (0.44 RSI) + exterior insulation
Transmittance / Resistance without Anomaly	U_o, R_o, U_g	"clear field" U- and R-value: o = without curtainwall g = glazing
Transmittance / Resistance	U, R	U and R-values for the combined assembly
Surface Temperature Index[1]	T_i	0 = exterior temperature 1 = interior temperature
Linear Transmittance	Ψ	Incremental increase in transmittance per linear length of curtainwall

[1]Surface temperatures are a result of steady-state conductive heat flow with constant heat transfer coefficients. Limitations are identified in final report.

Nominal (1D) vs. Assembly Performance Indicators

Base Assembly Roof

Roof Insulation 1D R-Value (RSI)	R_{1D} ft²·hr·°F / Btu (m² K / W)	R_o ft²·hr·°F / Btu (m² K / W)	U_o Btu/ft² ·hr ·°F (W/m² K)
R-36 (6.34)	R-38.5 (6.78)	12.4 (2.18)	0.081 (0.46)

Base Assembly Glazing

$U_{centre\ of\ glass}$ Btu/ft² ·hr ·°F (W/m² K)	U_g Btu/ft² ·hr ·°F (W/m² K)
0.321 (1.82)	0.344 (1.95)

Roof to Wall Linear Transmittance

R ft²·hr·°F / Btu (m² K / W)	U Btu/ft² ·hr ·°F (W/m² K)	Ψ Btu/ft² ·hr ·°F (W/m² K)
2.7 (0.48)	0.369 (2.10)	0.679 (1.177)

Temperature Indices

T_{i1}	0.53	Upper corner of glazing
T_{i2}	0.54	Beam at curtain wall interior closure panel
T_{i3}	0.35	Underside of roof deck at beam

Detail 10.2.5

Exterior Insulated Sloped Metal Roof with Metal Sub-Girts (24" o.c.) Supporting Standing Seam Metal Roof and Curtain Wall – Roof to Wall Intersection with Through Wall Structural Beam and Thermally Broken Structural Metal Deck

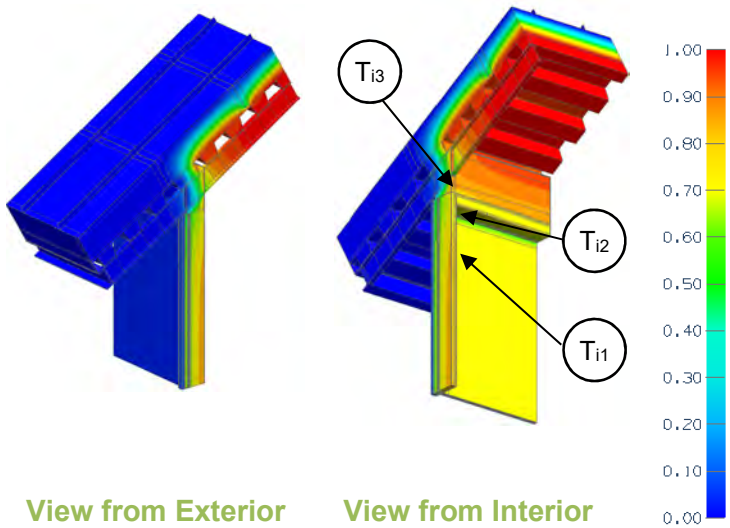

View from Exterior View from Interior

Thermal Performance Indicators

Assembly 1D (Nominal) R-Value	R_{1D}	R-2.5 (0.44 RSI) + exterior insulation
Transmittance / Resistance without Anomaly	U_o, R_o, U_g	"clear field" U- and R-value: o = without curtainwall g = glazing
Transmittance / Resistance	U, R	U and R-values for the combined assembly
Surface Temperature Index[1]	T_i	0 = exterior temperature 1 = interior temperature
Linear Transmittance	Ψ	Incremental increase in transmittance per linear length of curtainwall

[1]Surface temperatures are a result of steady-state conductive heat flow with constant heat transfer coefficients. Limitations are identified in final report.

Nominal (1D) vs. Assembly Performance Indicators

Base Assembly Roof

Roof Insulation 1D R-Value (RSI)	R_{1D} ft²·hr·°F / Btu (m² K / W)	R_o ft²·hr·°F / Btu (m² K / W)	U_o Btu/ft² ·hr ·°F (W/m² K)
R-36 (6.34)	R-38.5 (6.78)	12.4 (2.18)	0.081 (0.46)

Base Assembly Glazing

$U_{centre\ of\ glass}$ Btu/ft² ·hr ·°F (W/m² K)	U_g Btu/ft² ·hr ·°F (W/m² K)
0.321 (1.82)	0.344 (1.95)

Roof to Wall Linear Transmittance

R ft²·hr·°F / Btu (m² K / W)	U Btu/ft² ·hr ·°F (W/m² K)	Ψ Btu/ft ·hr ·°F (W/m K)
3.2 (0.56)	0.317 (1.80)	0.350 (0.607)

Temperature Indices

T_{i1}	0.53	Upper corner of glazing
T_{i2}	0.53	Beam at curtain wall interior closure panel
T_{i3}	0.80	Underside of roof deck at beam

Detail 10.2.6

Exterior Insulated Sloped Metal Roof with Metal Sub-Girts (24" o.c.) Supporting Standing Seam Metal Roof and Curtain Wall – Roof to Wall Intersection with Through Wall Structural Beam and Fully Insulated Soffit

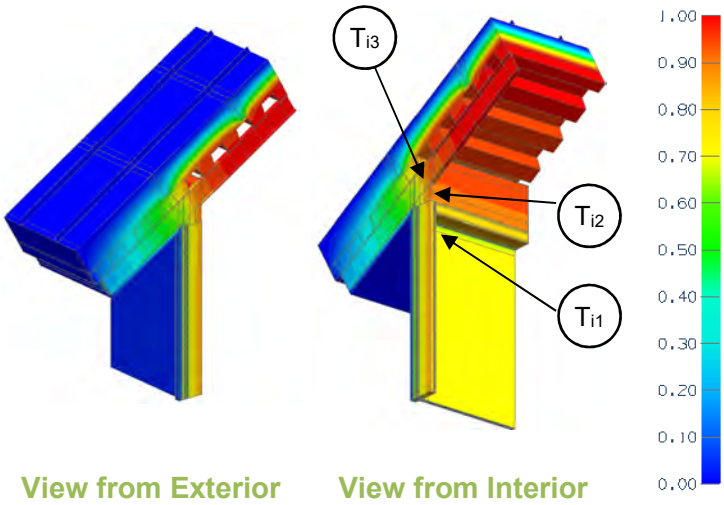

Thermal Performance Indicators

Assembly 1D (Nominal) R-Value	R_{1D}	R-2.5 (0.44 RSI) + exterior insulation
Transmittance / Resistance without Anomaly	U_o, R_o, U_g	"clear field" U- and R-value: o = without curtainwall g = glazing
Transmittance / Resistance	U, R	U and R-values for the combined assembly
Surface Temperature Index[1]	T_i	0 = exterior temperature 1 = interior temperature
Linear Transmittance	ψ	Incremental increase in transmittance per linear length of curtainwall

[1]Surface temperatures are a result of steady-state conductive heat flow with constant heat transfer coefficients. Limitations are identified in final report.

Nominal (1D) vs. Assembly Performance Indicators

Base Assembly Roof

Roof Insulation 1D R-Value (RSI)	R_{1D} ft²·hr·°F / Btu (m² K / W)	R_o ft²·hr·°F / Btu (m² K / W)	U_o Btu/ft² ·hr ·°F (W/m² K)
R-36 (6.34)	R-38.5 (6.78)	12.4 (2.18)	0.081 (0.46)

Base Assembly Glazing

$U_{centre\ of\ glass}$ Btu/ft² ·hr ·°F (W/m² K)	U_g Btu/ft² ·hr ·°F (W/m² K)
0.321 (1.82)	0.344 (1.95)

Roof to Wall Linear Transmittance

R ft²·hr·°F / Btu (m² K / W)	U Btu/ft² ·hr ·°F (W/m² K)	ψ Btu/ft ·hr ·°F (W/m K)
3.1 (0.55)	0.318 (1.81)	0.365 (0.633)

Temperature Indices

T_{i1}	0.58	Upper corner of glazing
T_{i2}	0.82	Beam at curtain wall interior closure panel
T_{i3}	0.71	Underside of roof deck at beam

Detail 10.3.1

Exterior Insulated Conventional Flat Roof – Roof Anchor

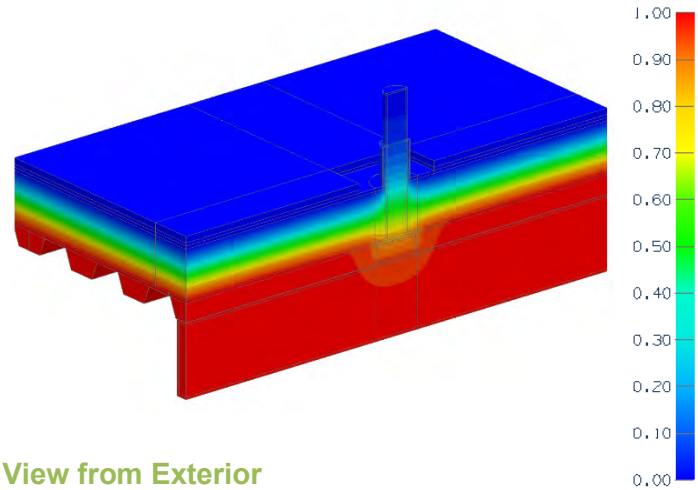

View from Exterior

Thermal Performance Indicators

Assembly 1D (Nominal) R-Value	R_{1D}	R-2.7 (0.48 RSI) + insulation
Transmittance / Resistance without Anomaly	U_o, R_o	"clear field" U- and R-value, without roof anchor
Surface Temperature Index[1]	T_i	0 = exterior temperature 1 = interior temperature
Point Transmittance	χ	Incremental increase in transmittance for anchor

[1]Surface temperatures are a result of steady-state conductive heat flow with constant heat transfer coefficients. Limitations are identified in final report

Nominal (1D) vs. Assembly Performance Indicators

Base Assembly – Roof

Roof Insulation 1D R-Value (RSI)	R_{1D} ft²·hr·°F / Btu (m² K / W)	R_o ft²·hr·°F / Btu (m² K / W)	U_o Btu/ft² ·hr ·°F (W/m² K)
R-40 (7.04)	R-42.7 (7.53)	R-42.7 (7.53)	0.023 (0.133)

Roof Anchor Point Transmittance

R ft²·hr·°F / Btu (m² K / W)	U Btu/ft² ·hr ·°F (W/m² K)	χ Btu/hr·°F (W/K)
R-26.0 (4.57)	0.039 (0.219)	0.640 (0.34)

Detail 10.3.2

Exterior Insulated Conventional Flat Roof – Armatherm Thermal Break under Roof Anchor

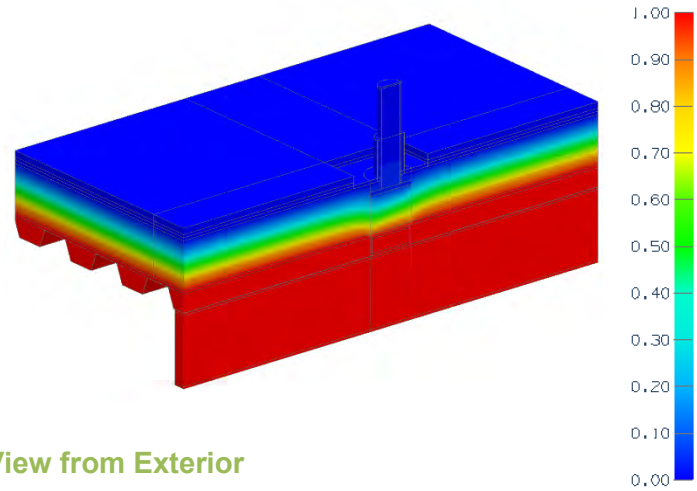

View from Exterior

Thermal Performance Indicators

Assembly 1D (Nominal) R-Value	R_{1D}	R-2.7 (0.48 RSI) + insulation
Transmittance / Resistance without Anomaly	U_o, R_o	"clear field" U- and R-value, without roof anchor
Surface Temperature Index[1]	T_i	0 = exterior temperature 1 = interior temperature
Point Transmittance	χ	Incremental increase in transmittance for anchor

[1]Surface temperatures are a result of steady-state conductive heat flow with constant heat transfer coefficients. Limitations are identified in final report

Scenarios

Scenario	Roof Anchor Arrangement
A	1/2" Armatherm FRR thermal break under roof anchor
B	6" Armatherm 500 thermal break under roof anchor

Nominal (1D) vs. Assembly Performance Indicators

Base Assembly – Roof

Roof Insulation 1D R-Value (RSI)	R_{1D} ft²·hr·°F / Btu (m² K / W)	R_o ft²·hr·°F / Btu (m² K / W)	U_o Btu/ft² ·hr ·°F (W/m² K)
R-40 (7.04)	R-42.7 (7.53)	R-42.7 (7.53)	0.023 (0.133)

Roof Anchor Point Transmittance

Scenario	R ft²·hr·°F / Btu (m² K / W)	U Btu/ft² ·hr ·°F (W/m² K)	χ Btu/hr·°F (W/K)
A	R-27.6 (4.86)	0.036 (0.206)	0.542 (0.29)
B	R-37.5 (6.60)	0.027 (0.151)	0.130 (0.07)

Detail 10.3.3

Exterior Insulated Conventional Low-Sloped Roof – Roof Anchor

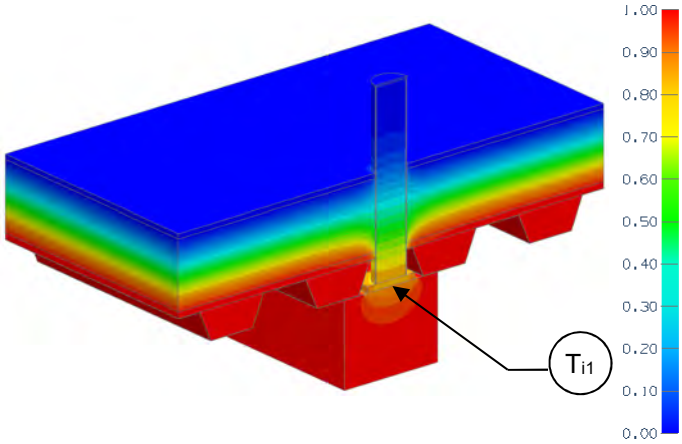

Thermal Performance Indicators

Assembly 1D (Nominal) R-Value	R_{1D}	R-2.28 (0.40 RSI) + insulation
Transmittance / Resistance without Anomaly	U_o, R_o	"clear field" U- and R-value, without connectors or joint
Transmittance / Resistance	U, R	U- and R-values for the overall assembly
Point Transmittance	χ	Incremental increase in transmittance per connector

Scenarios

Scenario	Roof Anchor
A	Without fill insulation
B	With fill insulation

Nominal (1D) vs. Assembly Performance Indicators

Base Assembly – Wall

Roof Insulation 1D R-Value (RSI)	R_{1D} ft²·hr·°F / Btu (m² K / W)	R_o ft²·hr·°F / Btu (m² K / W)	U_o Btu/ft² ·hr ·°F (W/m² K)
R-34.3 (6.03)	R-36.5 (6.44)	R-36.6 (6.45)	0.027 (0.155)

Roof Anchor Point Transmittance

Scenario	R ft²·hr·°F / Btu (m² K / W)	U Btu/ft² ·hr ·°F (W/m² K)	χ Btu/hr·°F (W/K)
A	R-25.1 (4.41)	0.040 (0.227)	0.202 (0.106)
B	R-26.7 (4.70)	0.037 (0.213)	0.163 (0.086)

Temperature Indices

	A	B	
Ti_1	0.80	0.84	Min T on beam, at anchor

Detail 10.3.4

Exterior Insulated Conventional Low-Sloped Roof – Thermal Break in Roof Anchor

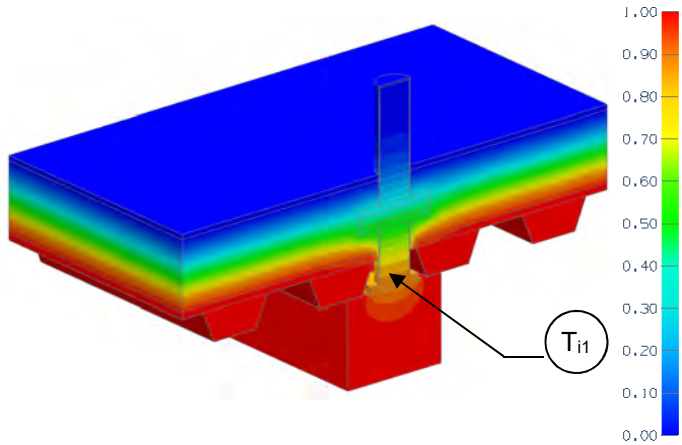

Thermal Performance Indicators

Assembly 1D (Nominal) R-Value	R_{1D}	R-2.28 (0.40 RSI) + insulation
Transmittance / Resistance without Anomaly	U_o, R_o	"clear field" U- and R-value, without connectors or joint
Transmittance / Resistance	U, R	U- and R-values for the overall assembly
Point Transmittance	χ	Incremental increase in transmittance for connector

Scenarios

Scenario	Roof Anchor
A	Without fill insulation
B	With fill insulation above thermal break

Nominal (1D) vs. Assembly Performance Indicators

Base Assembly – Wall

Roof Insulation 1D R-Value (RSI)	R_{1D} ft²·hr·°F / Btu (m² K / W)	R_o ft²·hr·°F / Btu (m² K / W)	U_o Btu/ft² ·hr ·°F (W/m² K)
R-34.3 (6.03)	R-36.5 (6.44)	R-36.7 (6.47)	0.027 (0.155)

Roof Anchor Point Transmittance

Scenario	R ft²·hr·°F / Btu (m² K / W)	U Btu/ft² ·hr ·°F (W/m² K)	χ Btu/hr·°F (W/K)
A	R-25.8 (4.55)	0.039 (0.220)	0.184 (0.097)
B	R-26.2 (4.61)	0.038 (0.217)	0.175 (0.093)

Temperature Indices

	A	B	
Ti_1	0.82	0.83	Min T on beam, at anchor